AC centrifugal fan and blower

single inlet, Ø 085

- **Material:** Housing: Die-cast aluminium
  Impeller: Galvanised sheet steel
  Rotor: Partially cast in aluminium
- **Direction of rotation:** Clockwise, seen on rotor
- **Type of protection:** IP 44
- **Insulation class:** "B"
- **Mounting position:** Any
- **Condensate discharges:** None
- **Mode of operation:** Continuous operation (S1)
- **Bearings:** Mairtenance-free ball bearings

Nominal data		Curve	Nominal voltage	Frequency	Air flow	Speed/rpm	Power input	Current draw	Capacitor	Sound pressure level	Min. back pressure	Perm. amb. temp.	Electr. connection
Type	**Motor**		**VAC**	**Hz**	**m³/h**	**rpm**	**W**	**A**	**µF/VDB**	**dB(A)**	**Pa**	**°C**	**p. 596 f.**
*2E 085	M2E 042-CA	Ⓐ	1~ 230	50	80	2350	32	0.15	1.0/400	53	0	-25 to +60	A1)
			1~ 230	60	95	2800	30	0.14	1.0/400	57	0	-25 to +70	

subject to alterations

Curves

	n [rpm]	P_1 [W]	I [A]
Ⓐ ❶	2430	32	0.15
Ⓐ ❷	2590	30	0.14

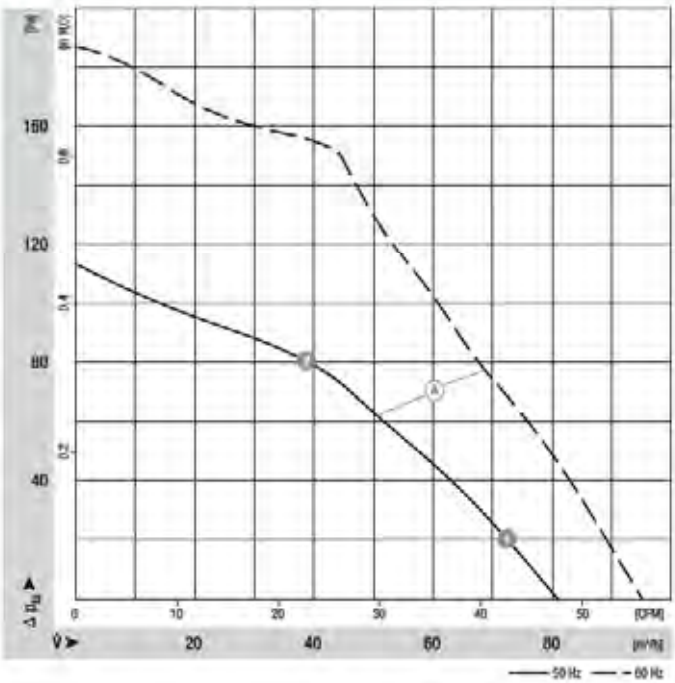

ebmpapst

- **Motor protection:** TOP wired internally
- **Cable exit:** Variable
- **Protection class:** I
- **Capacitor:** FPU (P2) acc. to IEC 252
- **Product conforming to standards:** EN 60335-1, CE
- **Approvals:** CCC

Centrifugal fan	Mass of centrifugal fan kg	Centrifugal blower with flange	Mass of centrifugal blower kg
R2E 085-AA01 -05	0.7	G2E 085-AA01 -01	0.9

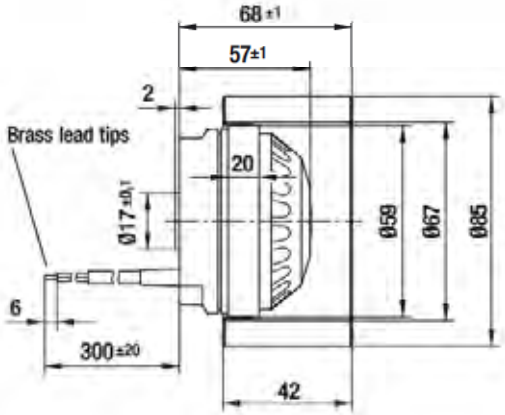

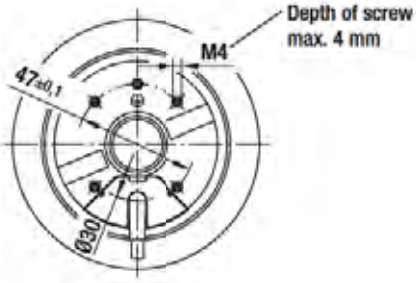

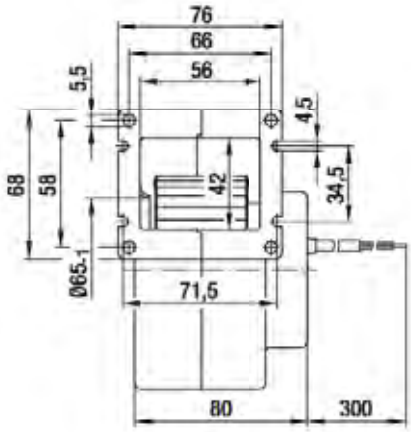

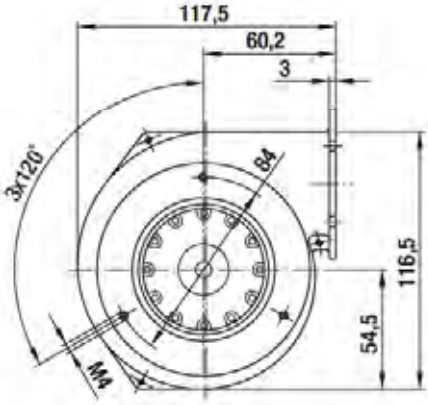

AC centrifugal fan and blower

single inlet, Ø 097

- **Material:** Housing: Galvanised sheet steel
  Impeller: Galvanised sheet steel
  Rotor: Partially cast in aluminium
- **Direction of rotation:** Clockwise, seen on rotor
- **Type of protection:** IP 44
- **Insulation class:** "B"
- **Mounting position:** Any
- **Condensate discharges:** None
- **Mode of operation:** Continuous operation (S1)
- **Bearings:** Mairtenance-free ball bearings

Nominal data		Curve	Nominal voltage	Frequency	Air flow	Speed/rpm	Power input	Current draw	Capacitor	Sound pressure level	Min. back pressure	Perm. amb. temp.	Electr. connection
Type	**Motor**		**VAC**	**Hz**	**m³/h**	**rpm**	**W**	**A**	**µF/VDB**	**dB(A)**	**Pa**	**°C**	**p. 596 f.**
*2E 097	M2E 042-CA	Ⓐ	1~ 230	50	100	2050	35	0.16	1.5/400	55	0	-25 to +40	A1)
			1~ 230	60	110	2300	37	0.17	1.5/400	58	0	-25 to +55	

subject to alterations

Curves

	n [rpm]	P_1 [W]	I [A]
Ⓐ ❶	2120	35	0.16
Ⓐ ❷	2335	33	0.15

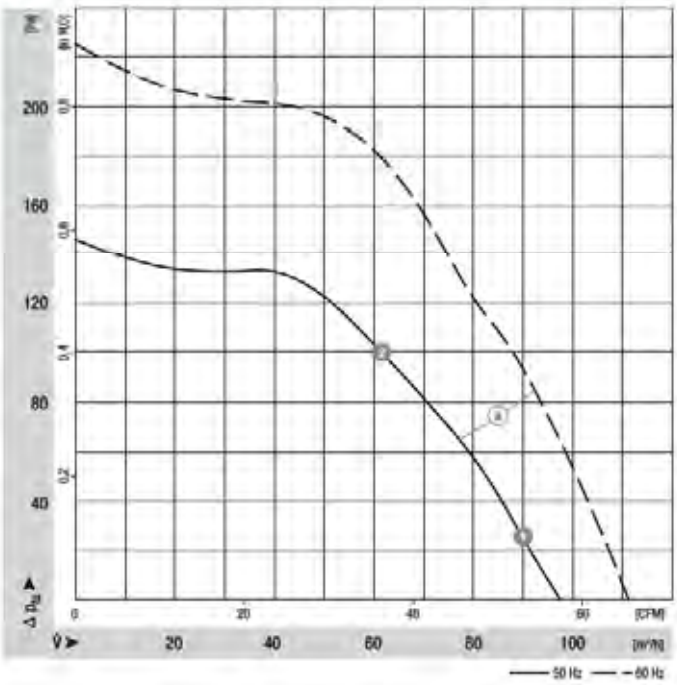

ebmpapst

- **Motor protection:** TOP wired internally
- **Cable exit:** Variable
- **Protection class:** I
- **Capacitor:** FPU (P2) acc. to IEC 252
- **Product conforming to standards:** EN 60335-1, CE
- **Approvals:** CCC

Centrifugal fan	Mass of centrifugal fan kg	Centrifugal blower without flange	Mass of centrifugal blower kg
R2E 097-AD01 -05	0.6	G2E 097-HD01 -02	1.1

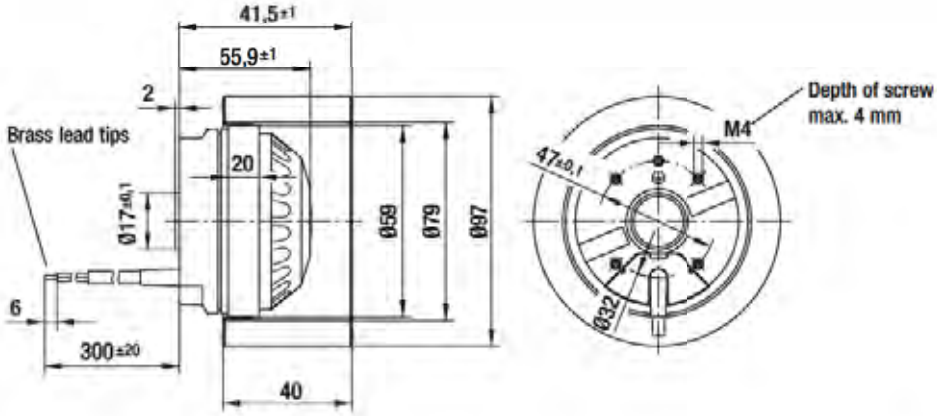

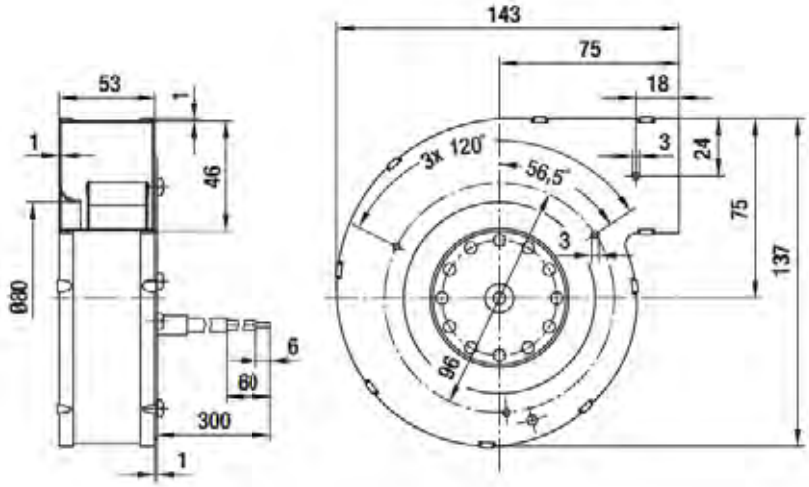

AC centrifugal fan and blower

single inlet, Ø 108

- **Material:** Housing: Die-cast aluminium
  Impeller: Galvanised sheet steel
  Rotor: Partially cast in aluminium
- **Direction of rotation:** Clockwise, seen on rotor
- **Type of protection:** IP 44
- **Insulation class:** "B"
- **Mounting position:** Any
- **Condensate discharges:** None
- **Mode of operation:** Continuous operation (S1)
- **Bearings:** Mairtenance-free ball bearings

Nominal data		Curve	Nominal voltage	Frequency	Air flow	Speed/rpm	Power input	Current draw	Capacitor	Sound pressure level	Min. back pressure	Perm. amb. temp.	Electr. connection
Type	**Motor**		**VAC**	**Hz**	**m³/h**	**rpm**	**W**	**A**	**µF/VDB**	**dB(A)**	**Pa**	**°C**	p. 596 f.
*2E 108	M2E 052-BF	Ⓐ	1~ 230 1~ 230	50 60	160 160	1850 1850	30 35	0.14 0.16	1.0/400 1.0/400	56 56	0 0	-25 to +85 -25 to +80	A1)

subject to alterations

Curves

	n [rpm]	P_1 [W]	I [A]
Ⓐ ❶	2070	34	0.16
Ⓐ ❷	2470	31	0.15

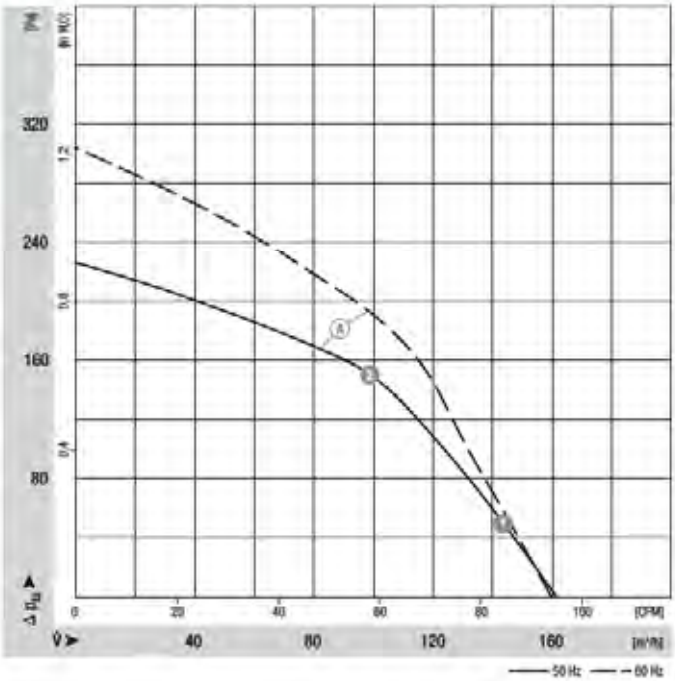

ebmpapst

- **Motor protection:** TOP wired internally
- **Cable exit:** Variable
- **Protection class:** I
- **Product conforming to standards:** EN 60335-1, CE
- **Approvals:** CCC

Centrifugal fan	Mass of centrifugal fan kg	Centrifugal blower with flange	Mass of centrifugal blower kg
R2E 108-AG63 -05	0.6	G2E 108-AG63 -01	1.3

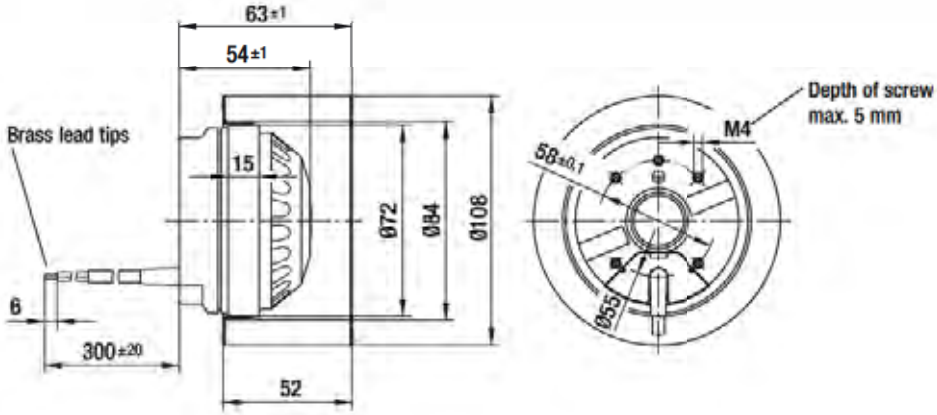

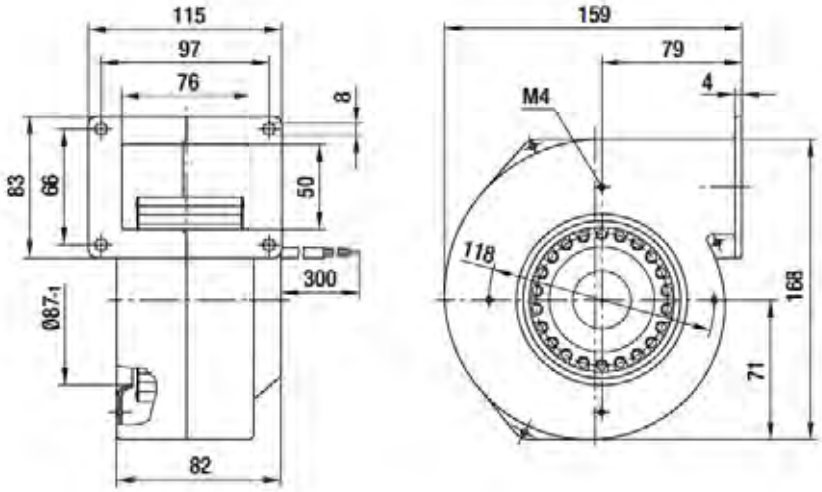

AC centrifugal fan and blower

single inlet, Ø 120

- **Material:** Housing: Die-cast aluminium
  Impeller: Galvanised sheet steel
  Rotor: Partially cast in aluminium
- **Direction of rotation:** Clockwise, seen on rotor
- **Type of protection:** IP 44
- **Insulation class:** "B"
- **Mounting position:** Any
- **Condensate discharges:** None
- **Mode of operation:** Continuous operation (S1)
- **Bearings:** Mairtenance-free ball bearings

Nominal data		Curve	Nominal voltage	Frequency	Air flow	Speed/rpm	Power input	Current draw	Capacitor	Sound pressure level	Min. back pressure	Perm. amb. temp.	Electr. connection
Type	**Motor**		**VAC**	**Hz**	**m³/h**	**rpm**	**W**	**A**	**µF/VDB**	**dB(A)**	**Pa**	**°C**	**p. 596 f.**
*2E 120	M2E 068-BF	Ⓐ	1~ 230 1~ 230	50 60	255 265	2350 2450	80 100	0.35 0.44	2.0/450 2.0/450	61 62	0 0	-25 to +55 -25 to +60	A1)

subject to alterations

Curves

	n [rpm]	P_1 [W]	I [A]
Ⓐ ❶	2480	77	0.34
Ⓐ ❷	2665	69	0.31

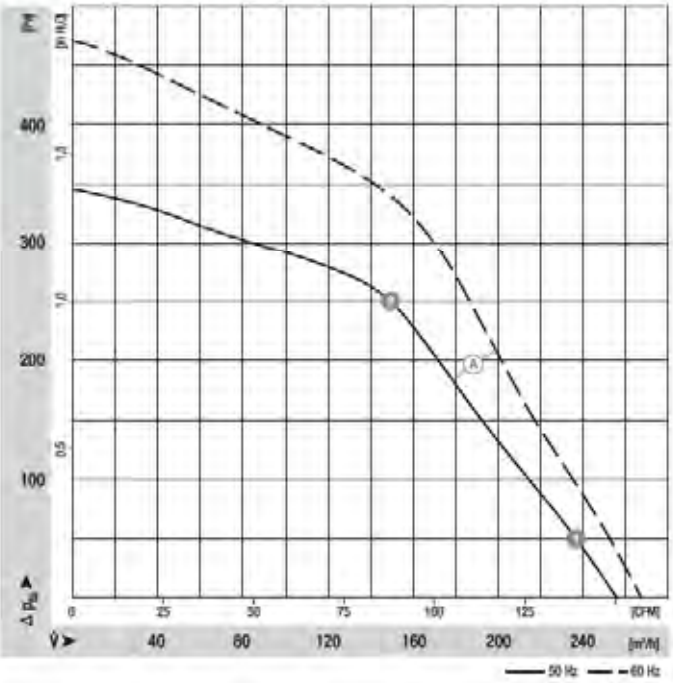

ebmpapst

- **Motor protection:** TOP wired internally
- **Cable exit:** Variable
- **Protection class:** I
- **Product conforming to standards:** EN 60335-1, CE
- **Approvals:** CCC, GOST

Centrifugal fan	Mass of centrifugal fan kg	Centrifugal blower with flange	Mass of centrifugal blower kg
R2E 120-AR77 -05	1.2	G2E 120-AR77 -01	1.8

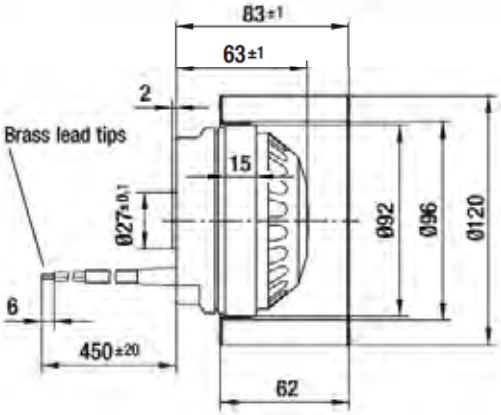

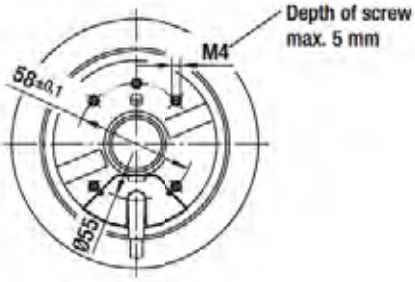

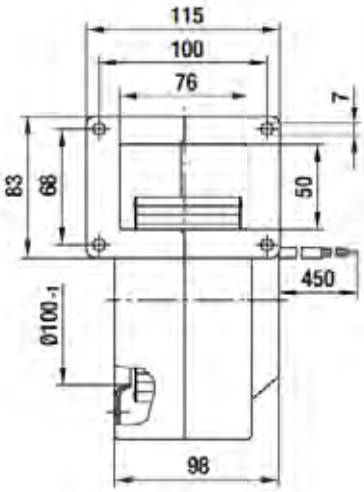

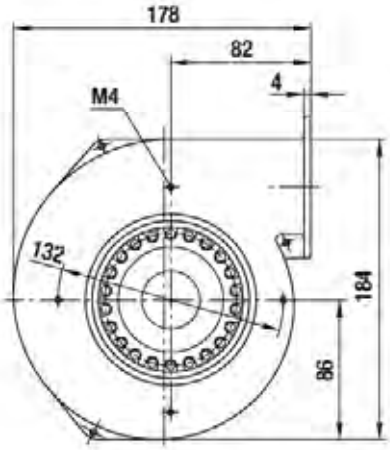

AC centrifugal fans and blowers

single inlet, Ø 120

- **Material:** Housing: Galvanised sheet steel
  Impeller: Galvanised sheet steel
  Rotor: Partially cast in aluminium
- **Direction of rotation:** Clockwise, seen on rotor
- **Type of protection:** IP 44
- **Insulation class:** Ⓐ "F", Ⓑ "B"
- **Mounting position:** Any
- **Condensate discharges:** None
- **Mode of operation:** Continuous operation (S1)
- **Bearings:** Maintenance-free ball bearings

Nominal data		Curve	Nominal voltage	Frequency	Air flow	Speed/rpm	Power input	Current draw	Capacitor	Sound pressure level	Min. back pressure	Perm. amb. temp.	Electr. connection
Type	**Motor**		**VAC**	**Hz**	**m³/h**	**rpm**	**W**	**A**	**µF/VDB**	**dB(A)**	**Pa**	**°C**	p. 596 f.
*2E 120	M2E 052-BF	Ⓐ	1~ 230 1~ 230	50 60	190 185	2050 2000	57 66	0.25 0.29	1.5/400 1.5/400	63 63	0 0	-25 to +55 -25 to +55	A1)
*2E 120	M2E 068-BF	Ⓑ	1~ 230 1~ 230	50 60	275 255	2200 2050	83 100	0.37 0.45	2.0/450 2.0/450	64 63	0 0	-25 to +70 -25 to +60	A1)

subject to alterations

Curves

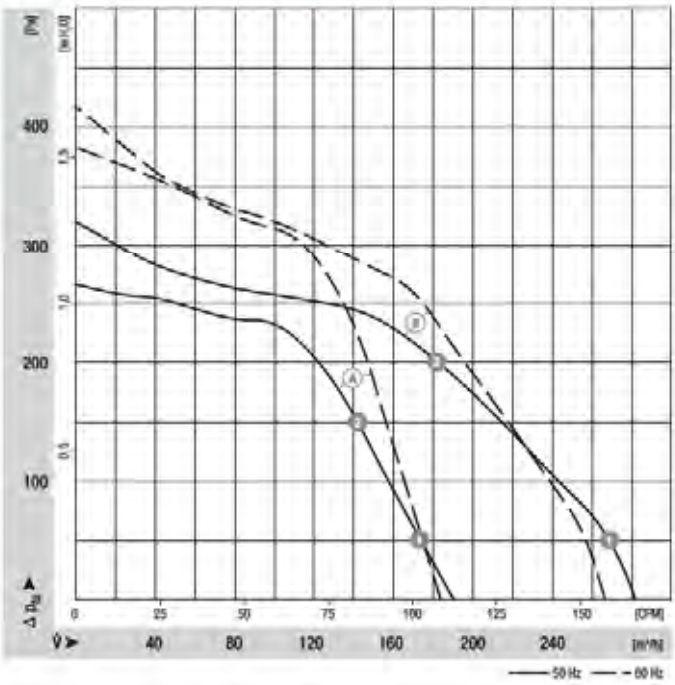

	n [rpm]	P_1 [W]	I [A]
Ⓐ ❶	2200	54	0.24
Ⓐ ❷	2410	51	0.23
Ⓑ ❶	2335	80	0.36
Ⓑ ❷	2580	72	0.32

ebmpapst

- **Motor protection:** TOP wired internally
- **Cable exit:** Variable
- **Protection class:** I
- **Product conforming to standards:** EN 60335-1, CE
- **Approvals:** ®CCC

Centrifugal fan	Mass of centrifugal fan kg	Dimensions b	Dimensions c	Centrifugal blower without flange	Centrifugal blower with flange	Mass of centrifugal blower kg	Dimensions A	B	C	D	F	G	I
R2E 120-BD76 -09	1.0	42.0	48.0	**G2E 120-TD76 -01**	—	1.3	—	—	—	—	59.0	—	60.0
R2E 120-AR21 -05	1.2	62.0	85.0	—	**G2E 120-CR21 -01**	1.9	110.0	94.0	98.0	82.0	77.0	6.0	99.0

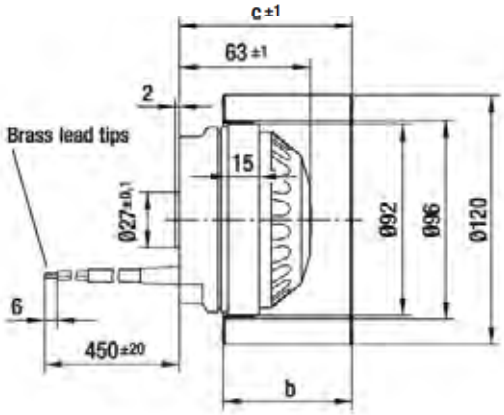

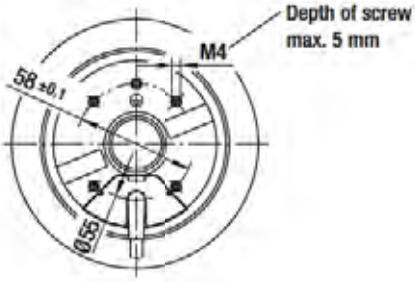

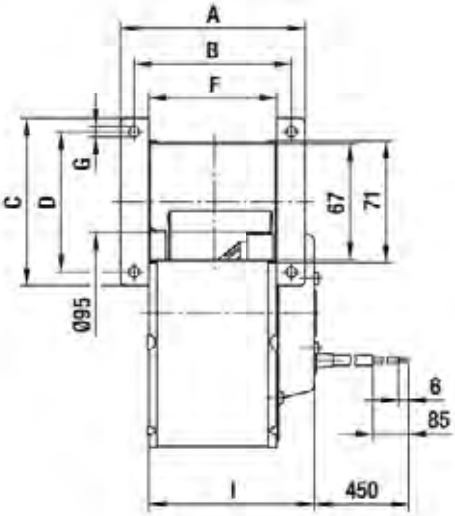

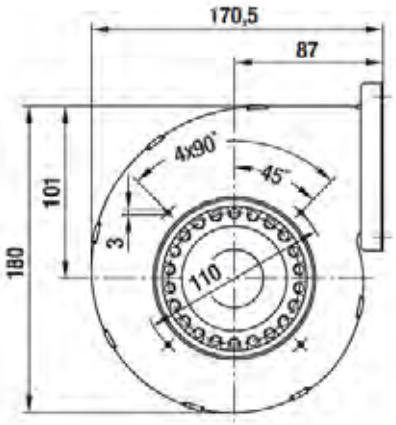

AC centrifugal fan and blower

single inlet, Ø 133

- **Material:** Housing: Galvanised sheet steel
  Impeller: Galvanised sheet steel
  Rotor: Partially cast in aluminium
- **Direction of rotation:** Clockwise, seen on rotor
- **Type of protection:** IP 44
- **Insulation class:** "B"
- **Mounting position:** Any
- **Condensate discharges:** None
- **Mode of operation:** Continuous operation (S1)
- **Bearings:** Maintenance-free ball bearings

Nominal data		Curve	Nominal voltage	Frequency	Air flow	Speed/rpm	Power input	Current draw	Capacitor	Sound pressure level	Min. back pressure	Perm. amb. temp.	Electr. connection
Type	**Motor**		**VAC**	**Hz**	**m³/h**	**rpm**	**W**	**A**	**µF/VDB**	**dB(A)**	**Pa**	**°C**	p. 596 f.
*2E 133	M2E 068-BF	Ⓐ	1~ 230	50	245	2150	88	0.39	2.0/450	65	0	-25 to +60	A1)
			1~ 230	60	235	2100	110	0.49	2.0/450	65	0	-25 to +50	

subject to alterations

Curves

	n [rpm]	P_1 [W]	I [A]
Ⓐ ❶	2290	83	0.37
Ⓐ ❷	2530	73	0.33

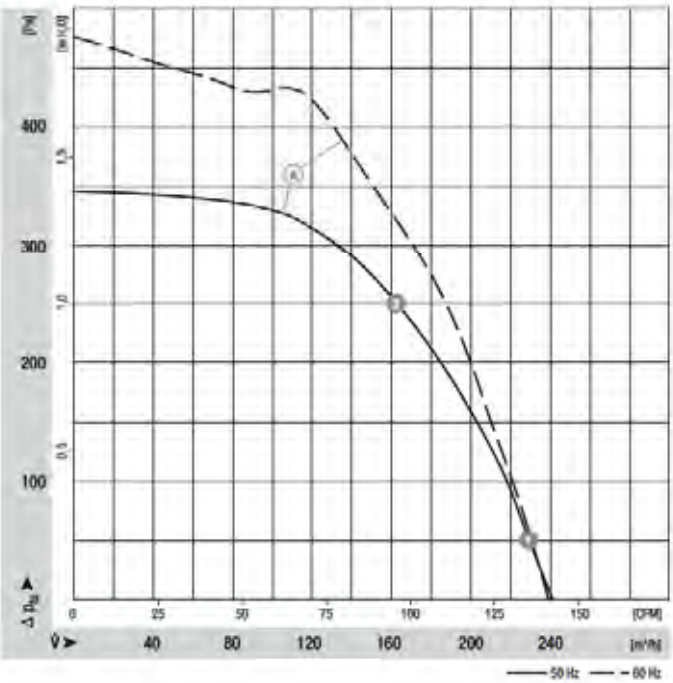

ebmpapst

- **Motor protection:** TOP wired internally
- **Cable exit:** Axial
- **Protection class:** I
- **Product conforming to standards:** EN 60335-1, CE
- **Approvals:** CCC

Centrifugal fan	Mass of centrifugal fan kg	Centrifugal blower with flange	Mass of centrifugal blower kg
R2E 133-AN77 -01	1.3	G2E 133-DN77 -01	1.9

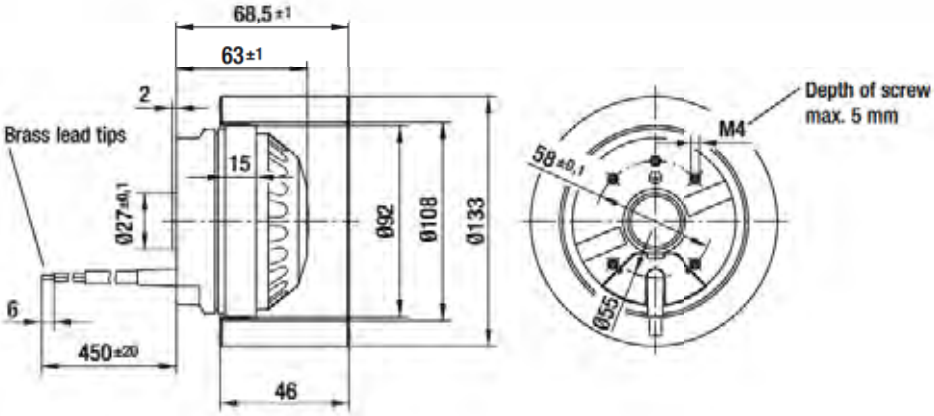

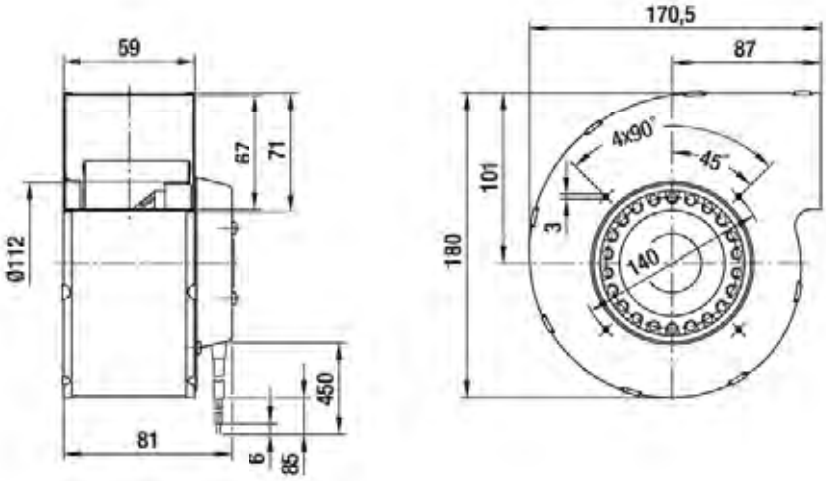

AC centrifugal fan and blower

single inlet, Ø 140

- **Material:** Housing: Galvanised sheet steel
  Impeller: Galvanised sheet steel
  Rotor: Partially cast in aluminium
- **Direction of rotation:** Clockwise, seen on rotor
- **Type of protection:** IP 44
- **Insulation class:** "B"
- **Mounting position:** Any
- **Condensate discharges:** None
- **Mode of operation:** Continuous operation (S1)
- **Bearings:** Maintenance-free ball bearings

Nominal data		Curve	Nominal voltage	Frequency	Air flow	Speed/rpm	Power input	Current draw	Capacitor	Sound pressure level	Min. back pressure	Perm. amb. temp.	Electr. connection
Type	**Motor**		**VAC**	**Hz**	**m³/h**	**rpm**	**W**	**A**	**µF/VDB**	**dB(A)**	**Pa**	**°C**	p. 596 f.
***2E 140**	M2E 052-CA	Ⓐ	1~ 230	50	240	1350	63	0.29	1.5/400	55	0	-25 to +45	A1)
			1~ 230	60	225	1300	70	0.31	1.5/400	53	0	-25 to +35	

subject to alterations

Curves

	n [rpm]	P_1 [W]	I [A]
Ⓐ ❶	1460	62	0.29
Ⓐ ❷	1930	56	0.26

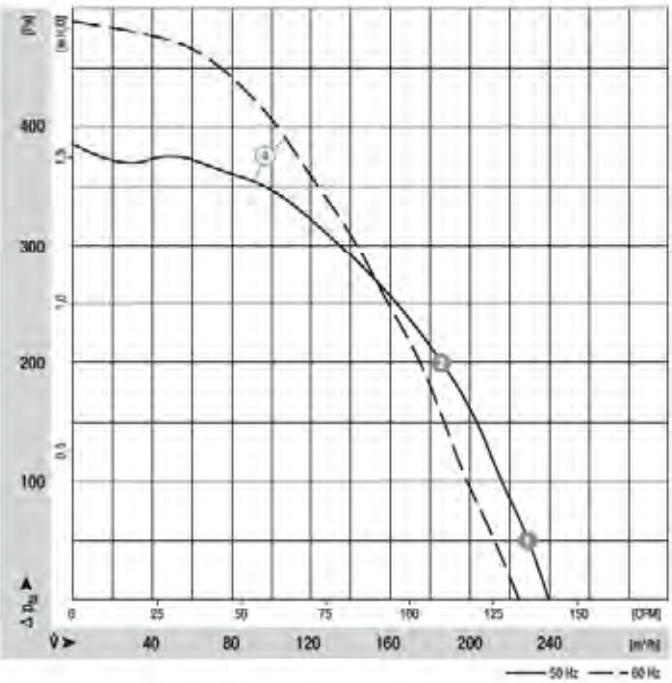

ebmpapst

- **Motor protection:** TOP wired internally
- **Cable exit:** Variable
- **Protection class:** I
- **Product conforming to standards:** EN 60335-1, CE

Centrifugal fan	Mass of centrifugal fan kg	Centrifugal blower with flange	Mass of centrifugal blower kg
R2E 140-BI52 -05	1.4	G2E 140-DI52 -01	1.9

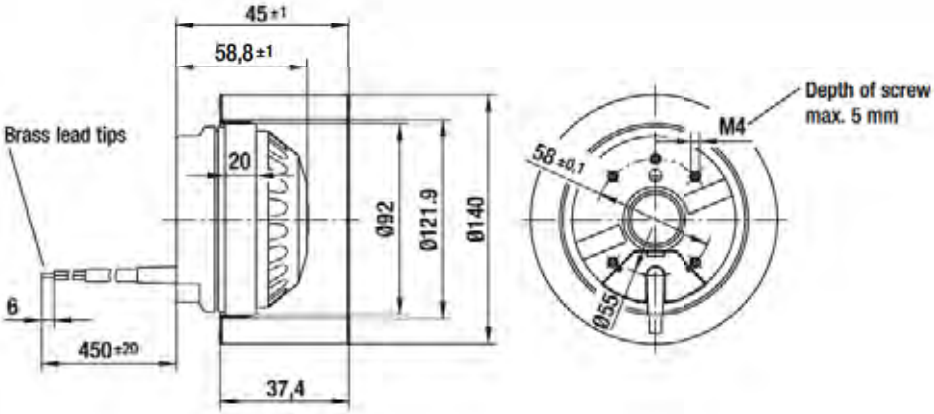

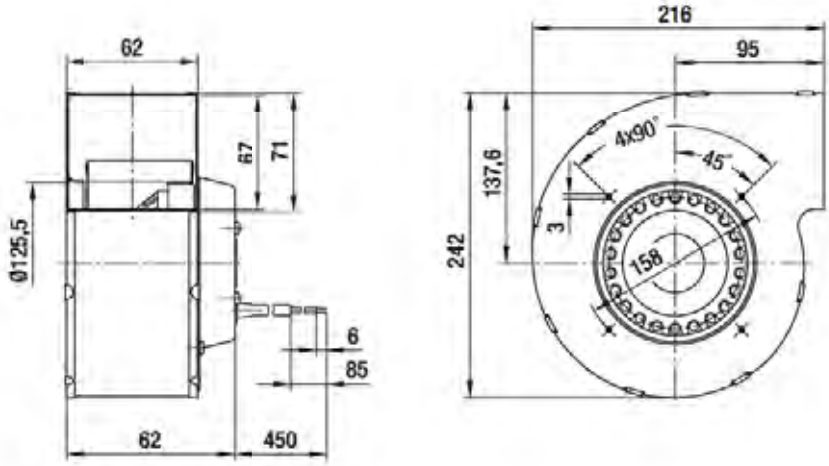

AC centrifugal fan and blower

single inlet, Ø 140

- **Material:** Housing: Die-cast aluminium
  Impeller: Galvanised sheet steel
  Rotor: Partially cast in aluminium
- **Direction of rotation:** Clockwise, seen on rotor
- **Type of protection:** IP 44
- **Insulation class:** "B"
- **Mounting position:** Any
- **Condensate discharges:** None
- **Mode of operation:** Continuous operation (S1)
- **Bearings:** Maintenance-free ball bearings

Nominal data		Curve	Nominal voltage	Frequency	Air flow	Speed/rpm	Power input	Current draw	Capacitor	Sound pressure level	Min. back pressure	Perm. amb. temp.	Electr. connection
Type	**Motor**		**VAC**	**Hz**	**m³/h**	**rpm**	**W**	**A**	**µF/VDB**	**dB(A)**	**Pa**	**°C**	p. 596 f.
***2E 140**	M2E 068-BF	Ⓐ	1~ 230	50	370	1400	105	0.46	2.0/450	59	0	-25 to +40	A1)
			1~ 230	60	335	1500	115	0.51	2.0/450	57	50	-25 to +45	

subject to alterations

Curves

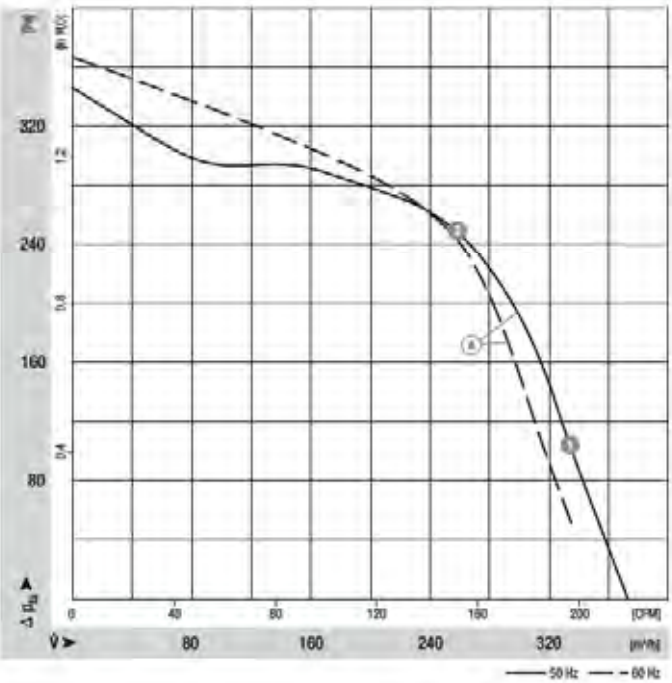

	n [rpm]	P_1 [W]	I [A]
Ⓐ ❶	1700	98	0.43
Ⓐ ❷	2100	89	0.40

ebmpapst

- **Motor protection:** TOP wired internally
- **Cable exit:** Variable
- **Protection class:** I
- **Product conforming to standards:** EN 60335-1, CE
- **Approvals:** CCC, GOST

Centrifugal fan	Mass of centrifugal fan kg	Centrifugal blower with flange	Mass of centrifugal blower kg
R2E 140-AE77 -05	1.2	G2E 140-AE77 -01	2.6

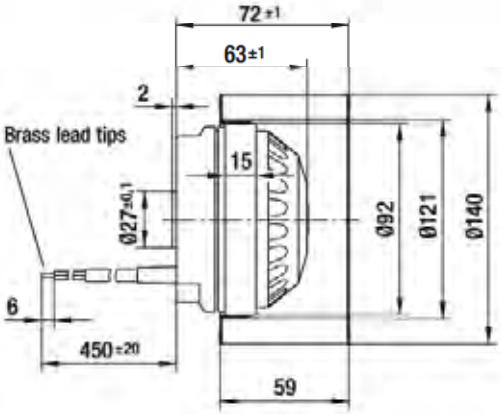

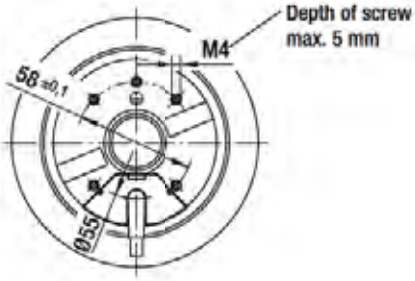

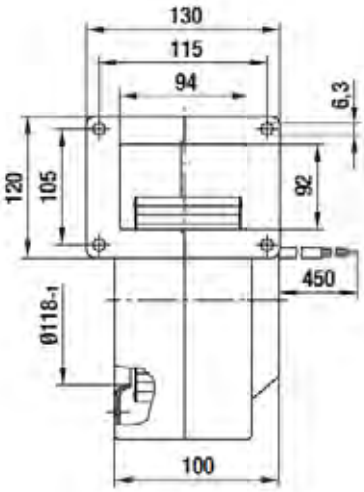

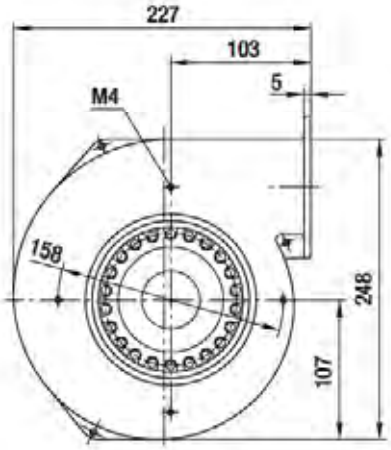

AC centrifugal fans and blowers

single inlet, Ø 140

- **Material:** Housing: Die-cast aluminium
  Impeller: Galvanised sheet steel
  Rotor: Partially cast in aluminium
- **Direction of rotation:** Clockwise, seen on rotor
- **Type of protection:** IP 44
- **Insulation class:** "B"
- **Mounting position:** Any
- **Condensate discharges:** None
- **Mode of operation:** Continuous operation (S1)
- **Bearings:** Maintenance-free ball bearings

Nominal data		Curve	Nominal voltage	Frequency	Air flow	Speed/rpm	Power input	Current draw	Capacitor	Sound pressure level	Min. back pressure	Perm. amb. temp.	Electr. connection
Type	**Motor**		**VAC**	**Hz**	**m³/h**	**rpm**	**W**	**A**	**µF/VDB**	**dB(A)**	**Pa**	**°C**	p. 596 f.
***2E 140**	M2E 068-CF	Ⓐ	1~ 230 1~ 230	50 60	385 305	1650 1700	135 145	0.60 0.64	2.0/400 2.0/400	63 60	0 100	-25 to +55 -25 to +40	A1)
***2E 140**	M2E 068-DF	Ⓑ	1~ 230 1~ 230	50 60	485 480	2400 2350	160 205	0.70 0.90	4.0/400 4.0/400	72 71	0 0	-25 to +70 -25 to +45	A1)

subject to alterations

Curves

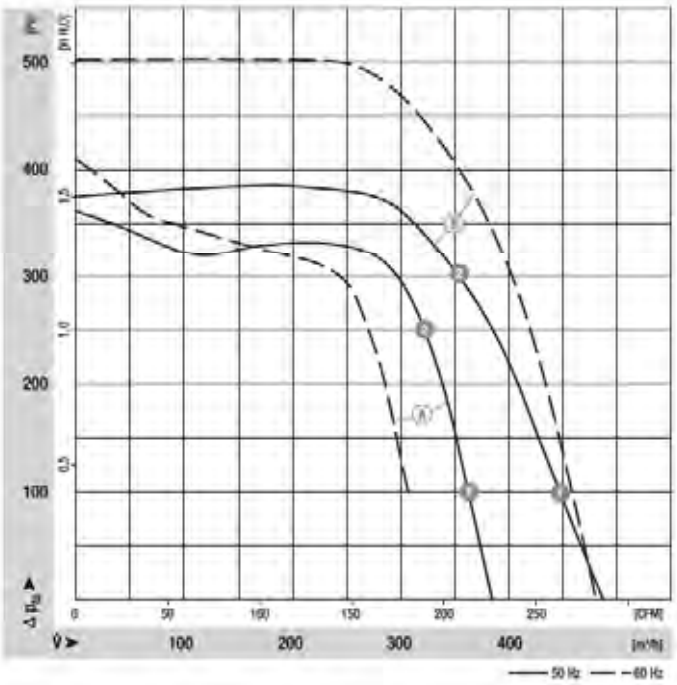

		n [rpm]	P_1 [W]	I [A]
Ⓐ	❶	1900	128	0.57
Ⓐ	❷	2200	117	0.52
Ⓑ	❶	2485	148	0.65
Ⓑ	❷	2630	128	0.57

ebmpapst

- **Motor protection:** TOP wired internally
- **Cable exit:** Variable
- **Protection class:** I
- **Product conforming to standards:** EN 60335-1, CE
- **Approvals:** CCC, GOST

	Mass of centrifugal fan	Dimensions			Mass of centrifugal blower
Centrifugal fan	**kg**	**d**	**e**	**Centrifugal blower with flange**	**kg**
R2E 140-AL40 -05	1.7	73.0	25.0	**G2E 140-AL40 -01**	3.0
R2E 140-AI28 -05	2.1	83.0	35.0	**G2E 140-AI28 -01**	3.4

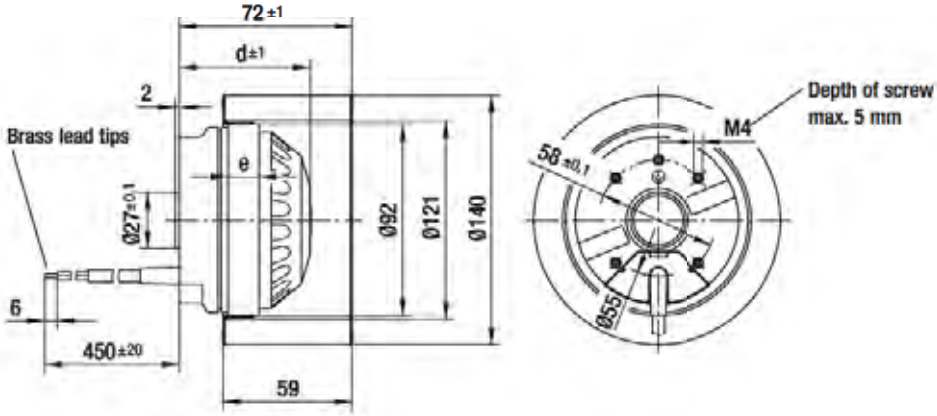

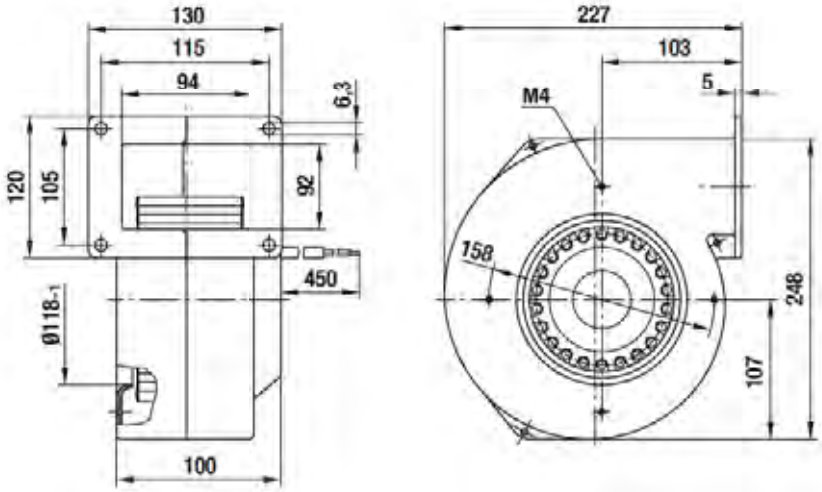

AC centrifugal blowers

single inlet, Ø 140

- **Material:** Housing: Heat-resistant plastic
  Impeller: Ⓐ heat-resistant plastic, Ⓑ galvanised sheet steel
  Rotor: Partially cast in aluminium
- **Direction of rotation:** Clockwise, seen on rotor
- **Type of protection:** IP 44
- **Insulation class:** "B"
- **Mounting position:** Any
- **Condensate discharges:** None
- **Mode of operation:** Continuous operation (S1)
- **Bearings:** Maintenance-free ball bearings

Nominal data		Curve	Nominal voltage	Frequency	Air flow	Speed/rpm	Power input	Current draw	Capacitor	Sound pressure level	Min. back pressure	Perm. amb. temp.	Electr. connection
Type	**Motor**		**VAC**	**Hz**	**m³/h**	**rpm**	**W**	**A**	**µF/VDB**	**dB(A)**	**Pa**	**°C**	p. 596 f.
G2E 140	M2E 068-BF	Ⓐ	1~ 230	50	370	1650	105	0.46	2.0/400	59	0	-25 to +55	A1)
			1~ 230	60	315	1700	115	0.51	2.0/400	57	50	-25 to +40	
G2E 140	M2E 068-CF	Ⓑ	1~ 230	50	445	2000	137	0.60	3.0/400	65	0	-25 to +65	A1)
			1~ 230	60	390	2150	155	0.68	3.0/400	64	130	-25 to +50	

subject to alterations

Curves

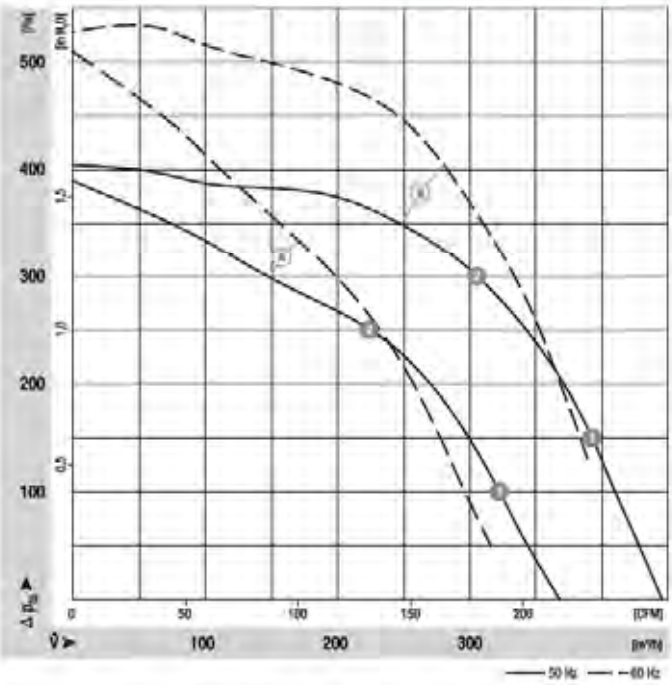

		n [rpm]	P_1 [W]	I [A]
Ⓐ	❶	1910	98	0.43
Ⓐ	❷	2280	86	0.38
Ⓑ	❶	2220	123	0.54
Ⓑ	❷	2470	105	0.46

ebmpapst

- **Motor protection:** TOP wired internally
- **Cable exit:** Variable
- **Protection class:** I
- **Product conforming to standards:** EN 60335-1, CE
- **Approvals:** CCC, GOST

Centrifugal blower without flange	Mass of centrifugal blower kg
G2E 140-NS38 -01	1.6
G2E 140-NL33 -01	1.6

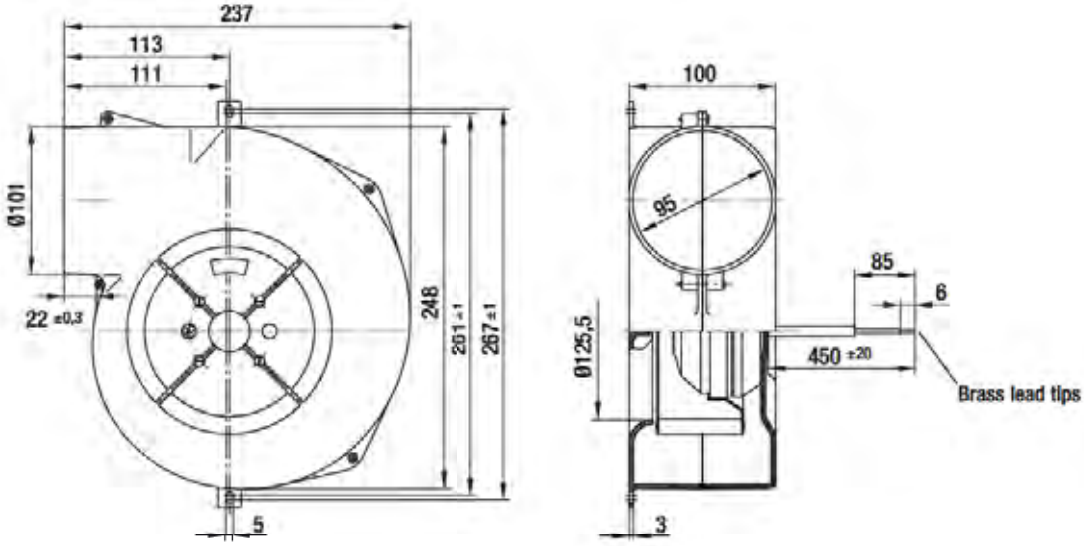

AC centrifugal fan and blower

single inlet, Ø 146

- **Material:** Housing: Die-cast aluminium
  Impeller: Galvanised sheet steel
  Rotor: Partially cast in aluminium
- **Direction of rotation:** Clockwise, seen on rotor
- **Type of protection:** IP 44
- **Insulation class:** "B"
- **Mounting position:** Any
- **Condensate discharges:** None
- **Mode of operation:** Continuous operation (S1)
- **Bearings:** Maintenance-free ball bearings

Nominal data		Curve	Nominal voltage	Frequency	Air flow	Speed/rpm	Power input	Current draw	Capacitor	Sound pressure level	Min. back pressure	Perm. amb. temp.	Electr. connection
Type	**Motor**		**VAC**	**Hz**	**m³/h**	**rpm**	**W**	**A**	**µF/VDB**	**dB(A)**	**Pa**	**°C**	p. 596 f.
***2E 146**	M2E 068-CA	Ⓐ	1~ 230 1~ 230	50 60	470 380	1550 1750	140 155	0.62 0.68	3.0/450 3.0/450	60 58	0 100	-25 to +50 -25 to +40	A1)

subject to alterations

Curves

	n [rpm]	P_1 [W]	I [A]
Ⓐ ❶	1835	136	0.60
Ⓐ ❷	2070	126	0.56

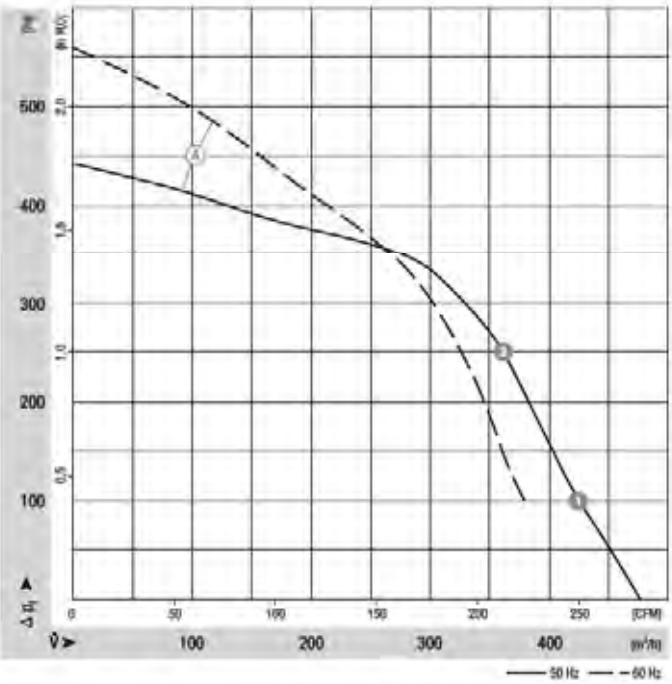

ebmpapst

- **Motor protection:** TOP wired internally
- **Cable exit:** Variable
- **Protection class:** I
- **Product conforming to standards:** EN 60335-1, CE
- **Approvals:** CCC, GOST

Centrifugal fan	Mass of centrifugal fan kg	Centrifugal blower with flange	Mass of centrifugal blower kg
R2E 146-AW07-05	1.4	G2E 146-DW07-01	2.6

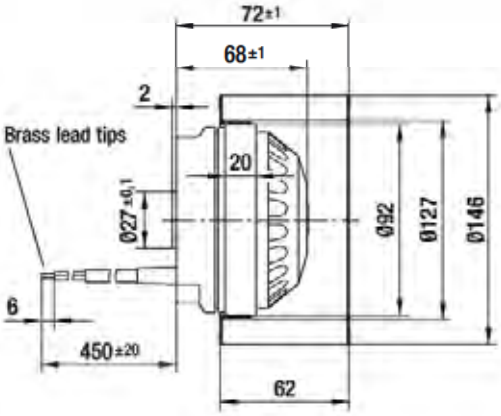

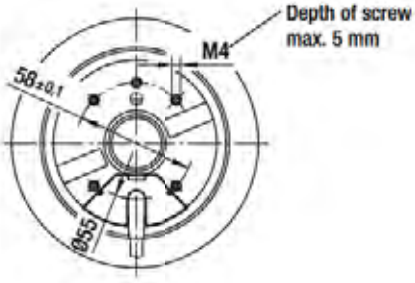

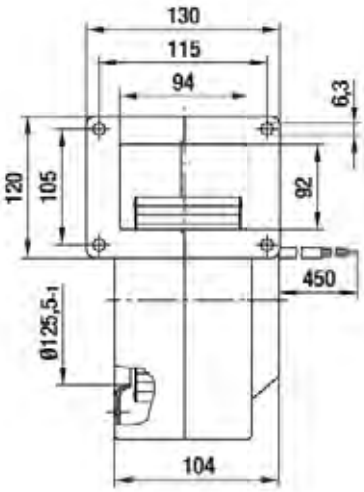

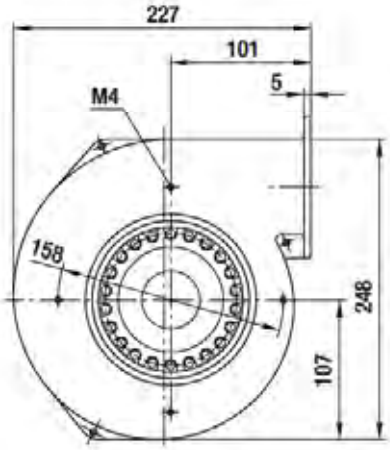

AC centrifugal fans and blowers

single inlet, Ø 160

- **Material:** Housing: Die-cast aluminium
  Impeller: Galvanised sheet steel
  Rotor: Partially cast in aluminium
- **Direction of rotation:** Clockwise, seen on rotor
- **Type of protection:** IP 44
- **Insulation class:** "B"
- **Mounting position:** Any
- **Condensate discharges:** None
- **Mode of operation:** Continuous operation (S1)
- **Bearings:** Maintenance-free ball bearings

Nominal data		Curve	Nominal voltage	Frequency	Air flow	Speed/rpm	Power input	Current draw	Capacitor	Sound pressure level	Min. back pressure	Perm. amb. temp.	Electr. connection
Type	**Motor**		**VAC**	**Hz**	**m³/h**	**rpm**	**W**	**A**	**µF/VDB**	**dB(A)**	**Pa**	**°C**	p. 596 f.
***2E 160**	M2E 068-EC	Ⓐ	1~ 230 1~ 230	50 60	600 570	2100 2100	240 280	1.05 1.23	6.0/400 6.0/400	72 71	0 50	-25 to +50 -25 to +40	A1)
***4E 160**	M4E 068-CF	Ⓑ	1~ 230 1~ 230	50 60	410 445	1300 1400	67 90	0.30 0.40	2.0/450 2.0/450	65 67	0 0	-25 to +65 -25 to +65	A1)

subject to alterations

Curves

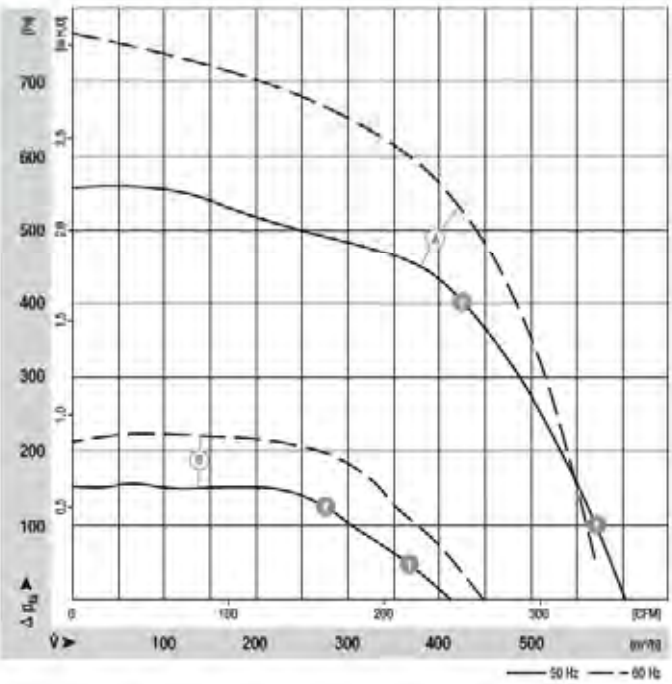

		n [rpm]	P_1 [W]	I [A]
Ⓐ	❶	2210	223	0.98
Ⓐ	❷	2525	172	0.76
Ⓑ	❶	1350	63	0.28
Ⓑ	❷	1395	58	0.26

ebmpapst

- **Motor protection:** TOP wired internally
- **Cable exit:** ⓐ variable, ⓑ lateral
- **Protection class:** I
- **Product conforming to standards:** EN 60335-1, CE
- **Approvals:** CCC

	Mass of centrifugal fan	Dimensions			Mass of centrifugal blower
Centrifugal fan	**kg**	**d**	**e**	**Centrifugal blower with flange**	**kg**
R2E 160-AY47 -01	2.6	91.0	42.0	**G2E 160-AY47 -01**	3.9
R4E 160-AB01 -01	1.7	72.0	25.0	**G4E 160-AB01 -01**	2.9

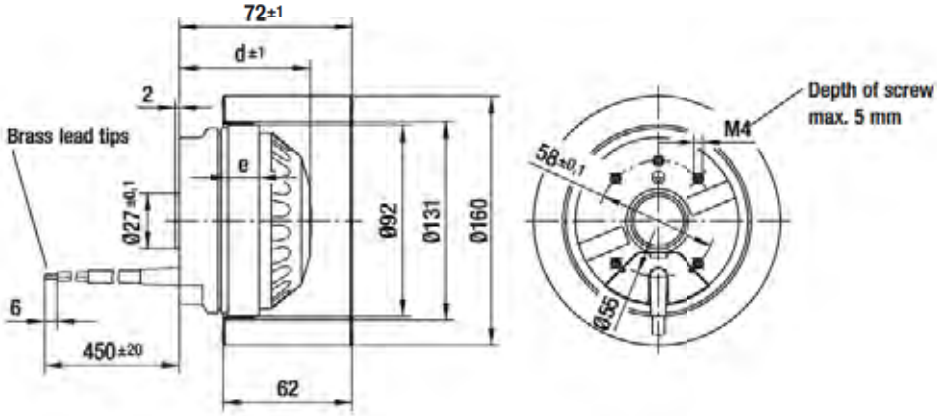

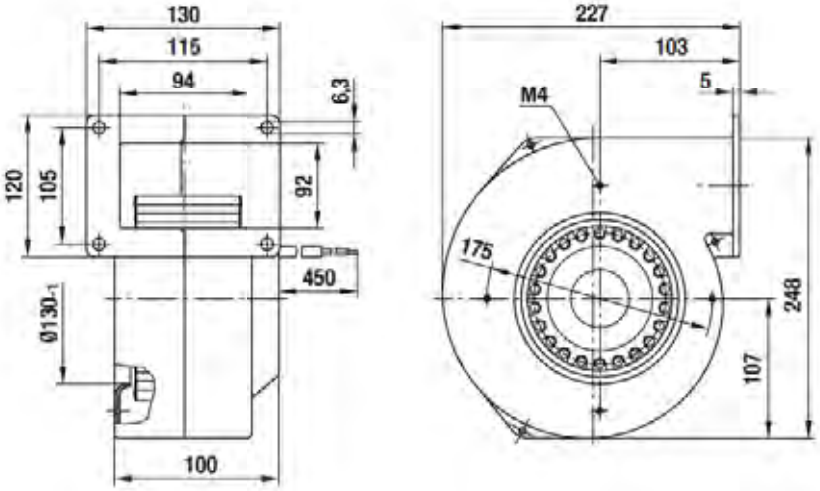

AC centrifugal fan and blower

single inlet, Ø 180

- **Material:** Housing: Die-cast aluminium
  Impeller: Galvanised sheet steel
  Rotor: Ⓐ coated in black, Ⓑ partially cast in aluminium
- **Direction of rotation:** Clockwise, seen on rotor
- **Type of protection:** IP 44
- **Insulation class:** "B"
- **Mounting position:** Any
- **Condensate discharges:** Rotor-side
- **Mode of operation:** Continuous operation (S1)
- **Bearings:** Maintenance-free ball bearings

Nominal data		Curve	Nominal voltage	Frequency	Air flow	Speed/rpm	Power input	Current draw	Capacitor	Sound pressure level	Min. back pressure	Perm. amb. temp.	Electr. connection
Type	**Motor**		**VAC**	**Hz**	**m³/h**	**rpm**	**W**	**A**	**µF/VDB**	**dB(A)**	**Pa**	**°C**	p. 596 f.
G2E 180	M2E 074-EI	Ⓐ	1~ 230 1~ 230	50 60	760 630	1950 2150	400 415	1.75 1.82	8.0/400 8.0/400	73 71	0 250	-25 to +40 -25 to +40	A1)
***4E 180**	M4E 068-DF	Ⓑ	1~ 230 1~ 230	50 60	575 594	1250 1300	110 145	0.49 0.64	3.0/450 3.0/450	65 65	0 0	-25 to +55 -25 to +45	A1)

subject to alterations

Curves

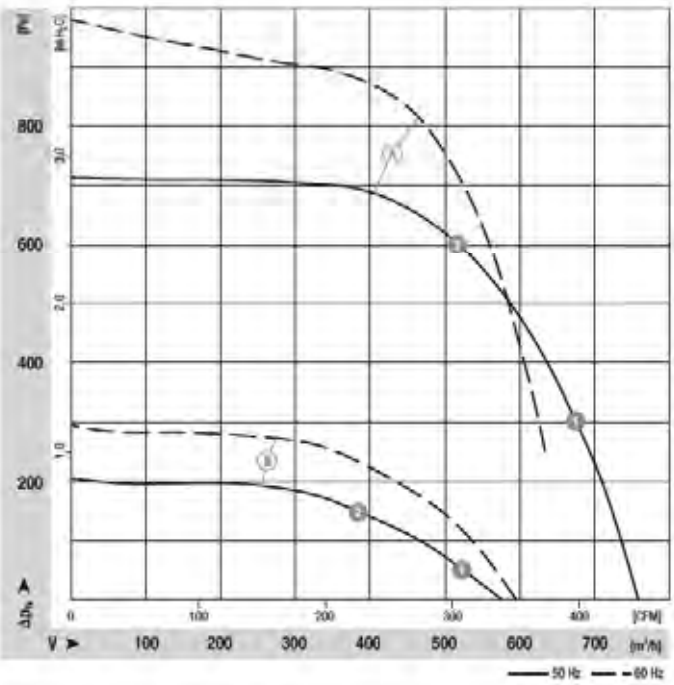

		n [rpm]	P_1 [W]	I [A]
Ⓐ	❶	2290	335	1.47
Ⓐ	❷	2600	255	1.12
Ⓑ	❶	1300	105	0.47
Ⓑ	❷	1385	92	0.41

ebmpapst

- **Motor protection:** TOP wired internally
- **Cable exit:** Axial
- **Protection class:** I
- **Product conforming to standards:** EN 60335-1, CE
- **Approvals:** CCC

	Mass of centrifugal fan	Dimensions		Mass of centrifugal blower
Centrifugal fan	**kg**	**e**	**Centrifugal blower with flange**	**kg**
—	—	48.0	**G2E 180-EH03 -01**	5.6
R4E 180-AB01 -05	1.7	35.0	**G4E 180-AB01 -01**	3.7

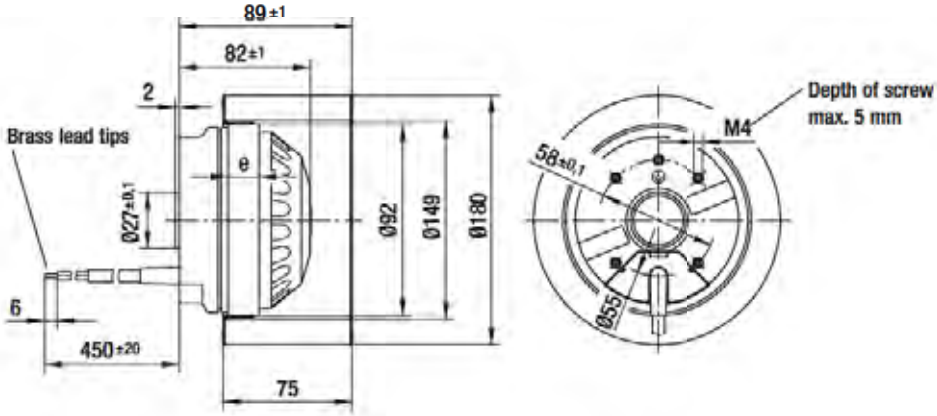

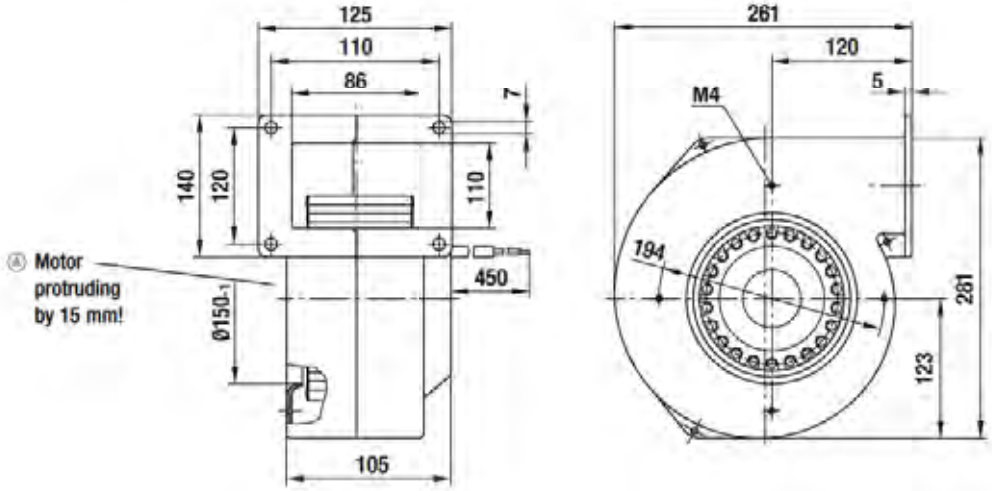

AC centrifugal fan and blower

single inlet, Ø 180

- **Material:** Housing: Galvanised sheet steel
  Impeller: Galvanised sheet steel
  Rotor: Coated in black
- **Direction of rotation:** Clockwise, seen on rotor
- **Type of protection:** IP 44
- **Insulation class:** "B"
- **Mounting position:** Any
- **Condensate discharges:** Rotor-side
- **Mode of operation:** Continuous operation (S1)
- **Bearings:** Maintenance-free ball bearings

Nominal data		Curve	Nominal voltage	Frequency	Air flow	Speed/rpm	Power input	Current draw	Capacitor	Sound pressure level	Min. back pressure	Perm. amb. temp.	Electr. connection
Type	**Motor**		**VAC**	**Hz**	**m³/h**	**rpm**	**W**	**A**	**µF/VDB**	**dB(A)**	**Pa**	**°C**	**p. 596 f.**
***4D 180**(2)	M4D 074-DF	Ⓐ	3~ 230/400	50	1010	1330	175	0.68/0.39	—	67	0	-25 to +60	C1)/C2)
			3~ 230/400	60	1090	1440	240	0.74/0.43	—	69	0	-25 to +55	
G4D 180(1)(2)	M4D 074-DF	Ⓑ	3~ 230/400	50	1110	1290	195	0.69/0.40	—	69	0	-25 to +60	C1)/C2)
			3~ 230/400	60	1180	1370	265	0.81/0.47	—	70	0	-25 to +45	

subject to alterations

(1) data collected via exhaust duct (step diffuser, 1 m length)

(2) 230 VAC Δ / 400 VAC Y

Curves

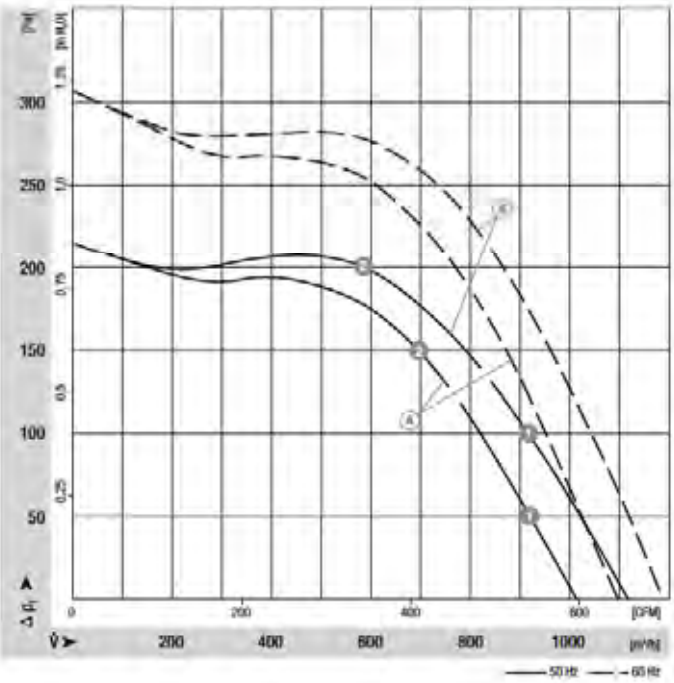

	n [rpm]	P_1 [W]	I [A]
Ⓐ ❶	1360	160	0.62/0.36
Ⓐ ❷	1410	120	0.46/0.27
Ⓑ ❶	1360	163	0.58/0.33
Ⓑ ❷	1420	105	0.38/0.22

ebmpapst

- **Motor protection:** Without thermal protection
- **Cable exit:** Variable
- **Protection class:** I
- **Product conforming to standards:** EN 60335-1, CE
- **Approvals:** CCC

Centrifugal fan	Mass of centrifugal fan kg	Centrifugal blower with flange (small)	Centrifugal blower with flange (large)	Mass of centrifugal blower kg	Dimensions C	D	E	S
R4D 180-AF20 -05	3.2	G4D 180-FF20 -01	—	6.4	188.0	168.0	134.0	90.0
—	—	—	G4D 180-GF20 -01	6.4	278.0	258.0	224.0	180.0

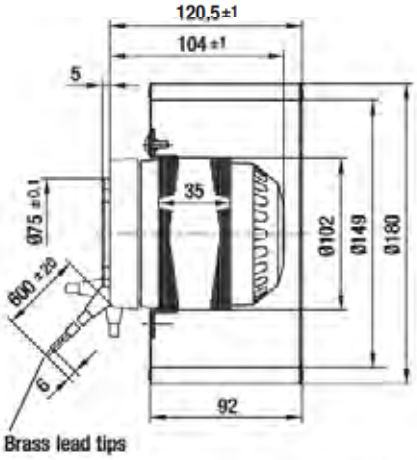

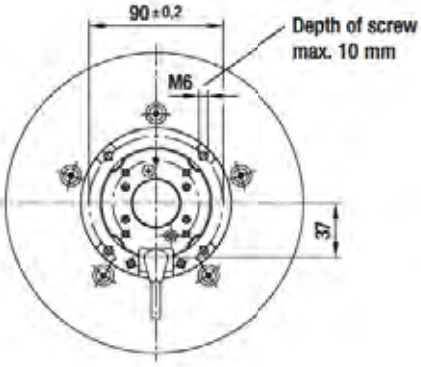

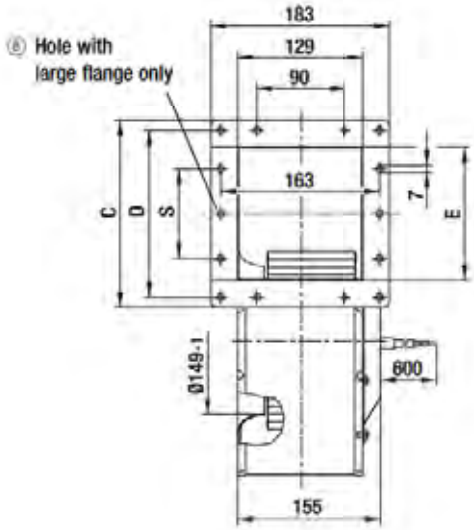

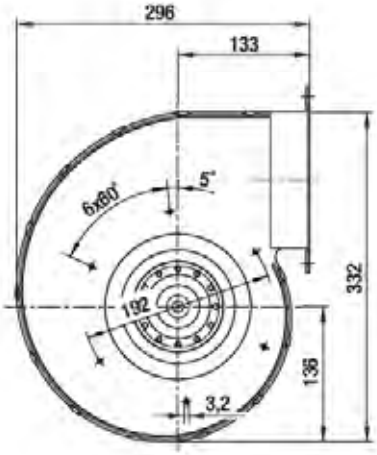

AC centrifugal fan and blower

single inlet, Ø 180

- **Material:** Housing: Galvanised sheet steel
  Impeller: Galvanised sheet steel
  Rotor: Coated in black
- **Direction of rotation:** Clockwise, seen on rotor
- **Type of protection:** IP 44
- **Insulation class:** "B"
- **Mounting position:** Any
- **Condensate discharges:** Rotor-side
- **Mode of operation:** Continuous operation (S1)
- **Bearings:** Maintenance-free ball bearings

Nominal data		Curve	Nominal voltage	Frequency	Air flow	Speed/rpm	Power input	Current draw	Capacitor	Sound pressure level	Min. back pressure	Perm. amb. temp.	Electr. connection
Type	**Motor**		**VAC**	**Hz**	**m³/h**	**rpm**	**W**	**A**	**µF/VDB**	**dB(A)**	**Pa**	**°C**	p. 596 f.
***4E 180**	M4E 074-DF	Ⓐ	1~ 230 1~ 230	50 60	965 935	1220 1200	160 197	0.71 0.87	4.0/400 4.0/400	66 65	0 0	-25 to +60 -25 to +40	A1)
G4E 180 (1)	M4E 074-DF	Ⓑ	1~ 230 1~ 230	50 60	1030 910	1130 1170	180 200	0.80 0.88	4.0/400 4.0/400	66 64	0 50	-25 to +45 -25 to +35	A1)

subject to alterations

(1) data collected via exhaust duct (step diffuser, length 1 m)

Curves

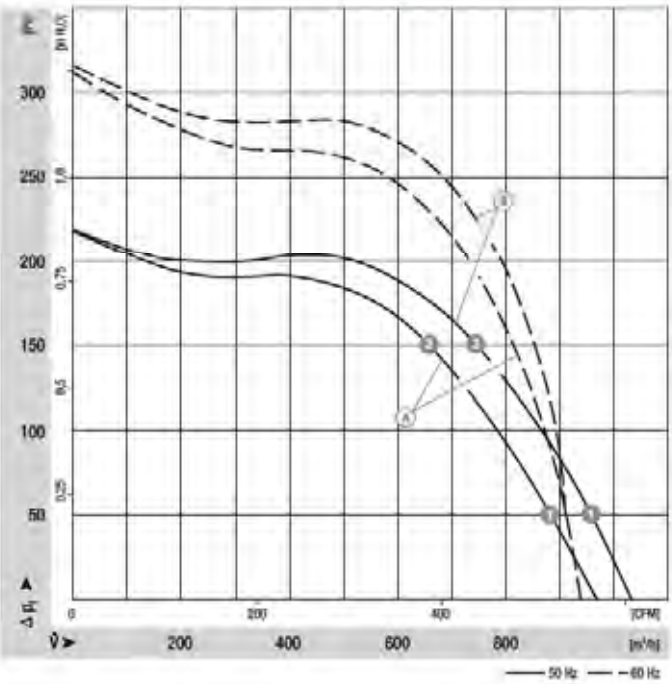

		n [rpm]	P_1 [W]	I [A]
Ⓐ	❶	1280	142	0.63
Ⓐ	❷	1375	112	0.50
Ⓑ	❶	1210	160	0.71
Ⓑ	❷	1340	123	0.55

ebmpapst

- **Motor protection:** TOP wired internally
- **Cable exit:** Variable
- **Protection class:** I
- **Product conforming to standards:** EN 60335-1, CE
- **Approvals:** CCC

Centrifugal fan	Mass of centrifugal fan kg	Centrifugal blower with flange (small)	Centrifugal blower with flange (large)	Mass of centrifugal blower kg	Dimensions C	D	E	S
R4E 180-AS11 -05	3.2	G4E 180-FS11 -01	—	6.4	188.0	168.0	134.0	90.0
—	—	—	G4E 180-GS11 -01	6.4	278.0	258.0	224.0	180.0

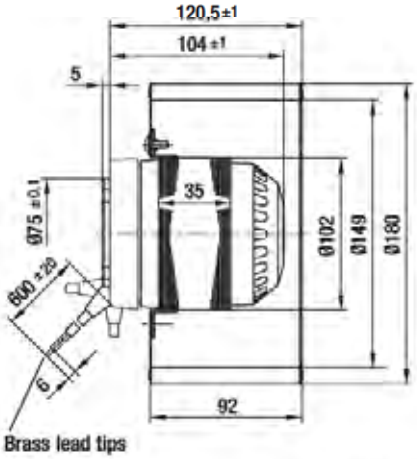

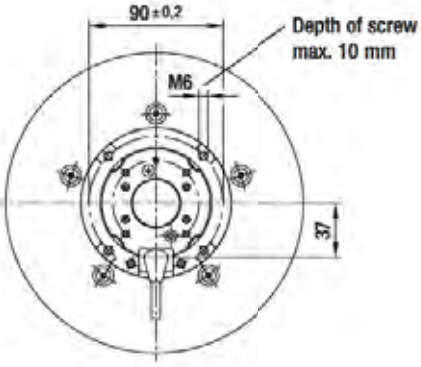

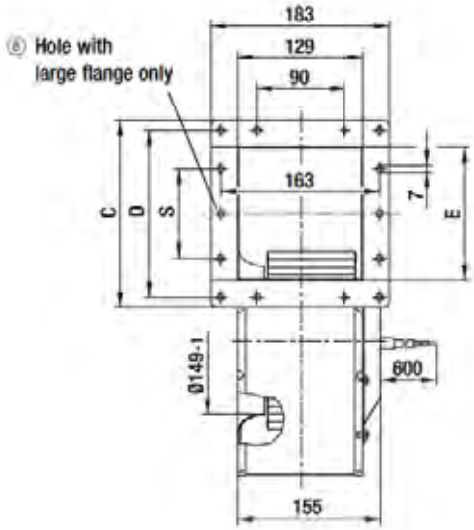

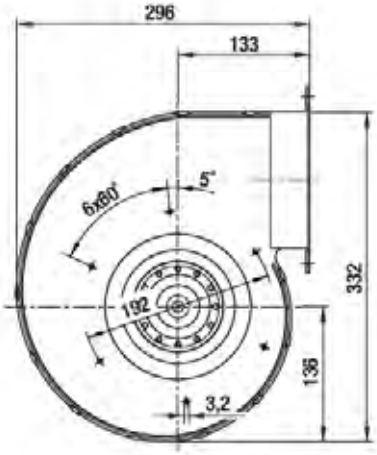

AC centrifugal fan and blower

single inlet, Ø 200

- **Material:** Housing: Galvanised sheet steel
  Impeller: Galvanised sheet steel
  Rotor: Coated in black
- **Direction of rotation:** Clockwise, seen on rotor
- **Type of protection:** IP 44
- **Insulation class:** "B"
- **Mounting position:** Any
- **Condensate discharges:** Rotor-side
- **Mode of operation:** Continuous operation (S1)
- **Bearings:** Maintenance-free ball bearings

Nominal data		Curve	Nominal voltage	Frequency	Air flow	Speed/rpm	Power input	Current draw	Capacitor	Sound pressure level	Min. back pressure	Perm. amb. temp.	Electr. connection
Type	**Motor**		**VAC**	**Hz**	**m³/h**	**rpm**	**W**	**A**	**µF/VDB**	**dB(A)**	**Pa**	**°C**	p. 596 f.
*4D 200 (2)	M4D 074-EI	Ⓐ	3~ 230/400 3~ 230/400	50 60	1375 1360	1350 1530	285 360	1.00/0.58 1.13/0.65	— —	69 69	0 100	-25 to +45 -25 to +45	C1)/C2)
G4D 200 (1)(2)	M4D 074-EI	Ⓑ	3~ 230/400 3~ 230/400	50 60	1665 1220	1300 1550	360 340	1.14/0.66 1.07/0.62	— —	71 69	0 250	-25 to +45 -25 to +40	C1)/C2)

subject to alterations

(1) data collected via exhaust duct (step diffuser, 1 m length)

(2) 230 VAC Δ / 400 VAC Y

Curves

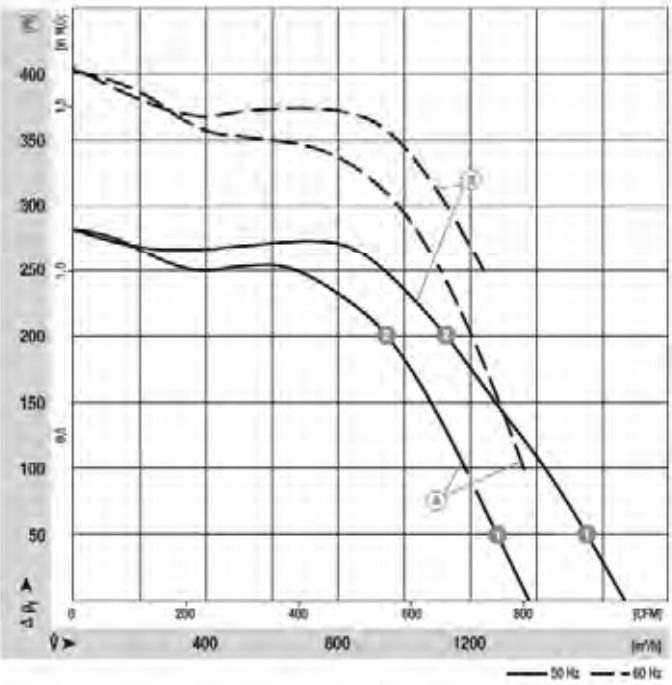

	n [rpm]	P_1 [W]	I [A]
Ⓐ ❶	1375	255	0.90/0.52
Ⓐ ❷	1415	192	0.68/0.39
Ⓑ ❶	1315	330	1.05/0.61
Ⓑ ❷	1385	230	0.74/0.43

ebmpapst

- **Motor protection:** Without thermal protection
- **Cable exit:** Axial
- **Protection class:** I
- **Product conforming to standards:** EN 60335-1, CE
- **Approvals:** CCC

Centrifugal fan	Mass of centrifugal fan kg	Centrifugal blower with flange (small)	Centrifugal blower with flange (large)	Mass of centrifugal blower kg	Dimensions C	D	E	S
R4D 200-AL12 -05	3.7	G4D 200-BL12 -01	—	7.0	200.0	180.0	146.0	90.0
—	—	—	G4D 200-CL12 -01	7.0	304.0	284.0	250.0	180.0

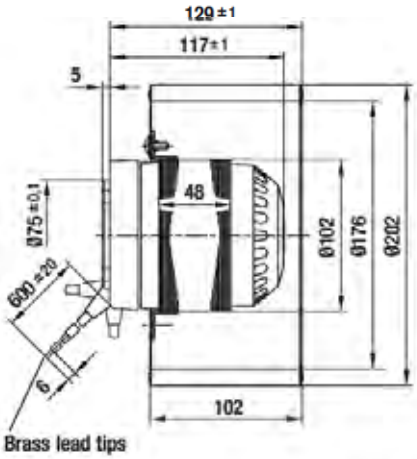

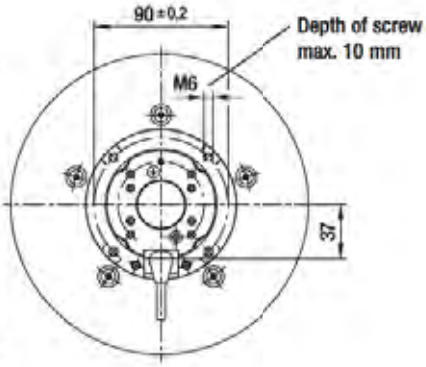

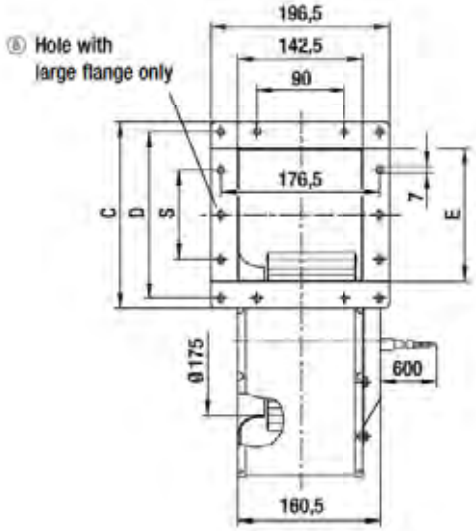

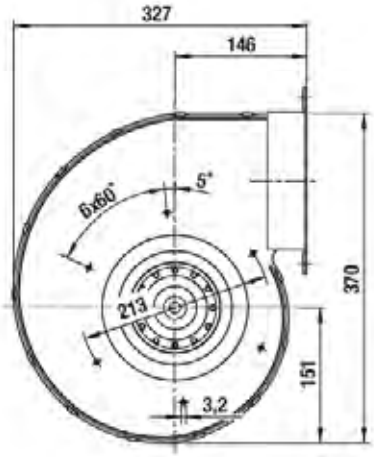

AC centrifugal fans and blowers

single inlet, Ø 200

- **Material:** Housing: Galvanised sheet steel
  Impeller: Galvanised sheet steel
  Rotor: Partially cast in aluminium
- **Direction of rotation:** Clockwise, seen on rotor
- **Type of protection:** IP 44
- **Insulation class:** "F"
- **Mounting position:** Any
- **Condensate discharges:** Rotor-side
- **Mode of operation:** Continuous operation (S1)
- **Bearings:** Maintenance-free ball bearings

Nominal data		Curve	Nominal voltage	Frequency	Air flow	Speed/rpm	Power input	Current draw	Capacitor	Sound pressure level	Min. back pressure	Perm. amb. temp.	Electr. connection
Type	**Motor**		**VAC**	**Hz**	**m³/h**	**rpm**	**W**	**A**	**µF/VDB**	**dB(A)**	**Pa**	**°C**	p. 596 f.
***4E 200**	M4E 074-EI	Ⓐ	1~ 230 1~ 230	50 60	1370 1315	1300 1480	280 350	1.25 1.55	8.0/400 8.0/400	69 69	0 100	-25 to +40 -25 to +40	A1)
G4E 200 (1)	M4E 074-EI	Ⓑ	1~ 230 1~ 230	50 60	1540 1300	1240 1430	330 370	1.45 1.62	8.0/400 8.0/400	70 68	0 170	-25 to +50 -25 to +40	A1)

subject to alterations

(1) data collected via exhaust duct (step diffuser, length 1 m)

Curves

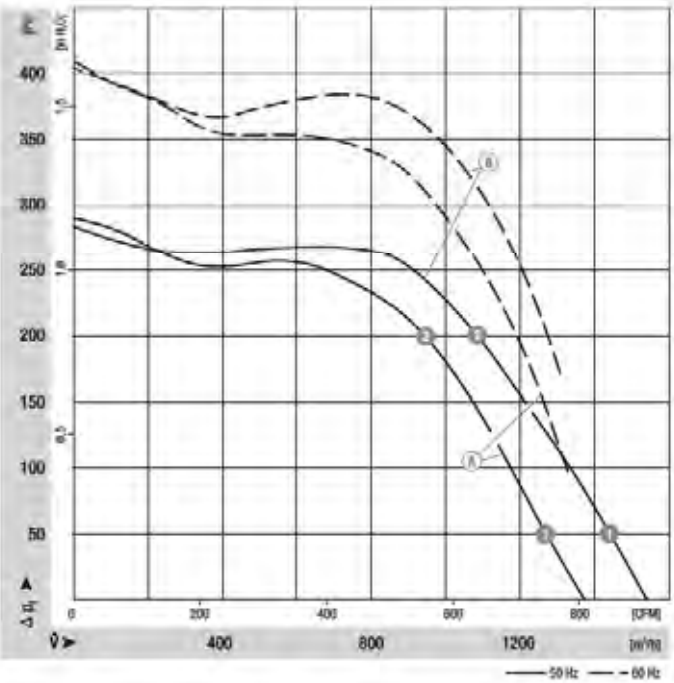

		n [rpm]	P_1 [W]	I [A]
Ⓐ	❶	1350	258	1.15
Ⓐ	❷	1400	214	0.96
Ⓑ	❶	1285	303	1.33
Ⓑ	❷	1370	242	1.07

ebmpapst

- **Motor protection:** TOP wired internally
- **Cable exit:** Axial
- **Protection class:** I
- **Capacitor:** FPU (P2) acc. to IEC 252
- **Product conforming to standards:** EN 60335-1, CE
- **Approvals:** CCC, ® also GOST

Centrifugal fan	Mass of centrifugal fan kg	Centrifugal blower with flange (small)	Centrifugal blower with flange (large)	Mass of centrifugal blower kg	Dimensions C	D	E	S
R4E 200-AL03 -05	3.7	G4E 200-BL03 -01	—	7.0	200.0	180.0	146.0	90.0
—	—	—	G4E 200-CL03 -01	7.0	304.0	284.0	250.0	180.0

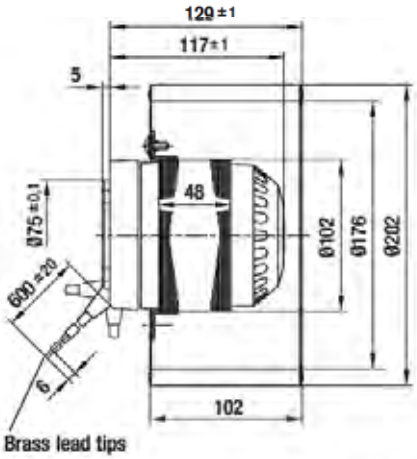

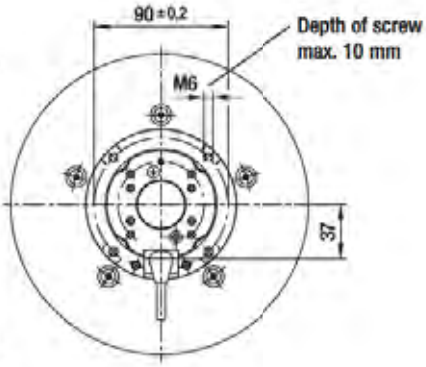

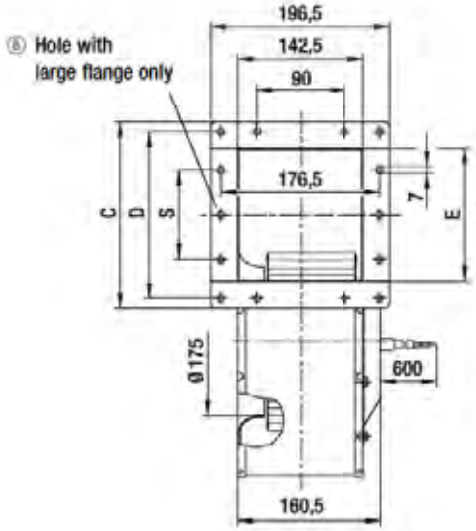

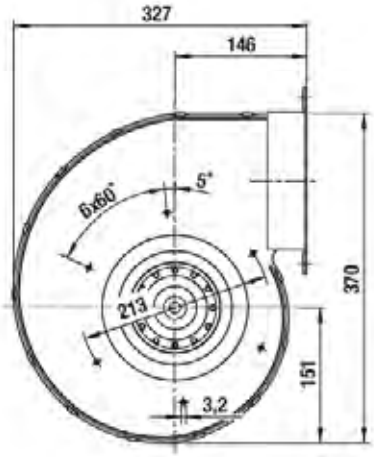

AC centrifugal fan and blower

single inlet, Ø 225

- **Material:** Housing: Galvanised sheet steel
  Impeller: Galvanised sheet steel
  Rotor: Coated in black
- **Direction of rotation:** Clockwise, seen on rotor
- **Type of protection:** IP 54 (acc. to EN 60529)
- **Insulation class:** "F"
- **Mounting position:** Any
- **Condensate discharges:** None
- **Mode of operation:** Continuous operation (S1)
- **Bearings:** Maintenance-free ball bearings

Nominal data		Curve	Nominal voltage	Frequency	Speed/rpm (1)	Max. power input (1)	Max. current draw (1)	Capacitor	Min. back pressure	Perm. amb. temp.	Electr. connection
Type	**Motor**		**VAC**	**Hz**	**rpm**	**W**	**A**	**µF/VDB**	**Pa**	**°C**	p. 596 f.
***4D 225**	M4D 094-FA	Ⓐ	3~ 400 Y 3~ 400 Y	50 60	1350 1500	380 540	0.75 0.94	— —	0 50	-40 to +90 -40 to +55	D2)
G4D 225 (2)	M4D 094-FA	Ⓑ	3~ 400 Y 3~ 400 Y	50 60	1310 1520	460 515	0.85 0.90	— —	0 200	-40 to +75 -40 to +60	D2)

subject to alterations (1) Nominal data in operating point with maximum load (2) Data collected via exhaust duct (step diffuser, 1 m length)

Curves

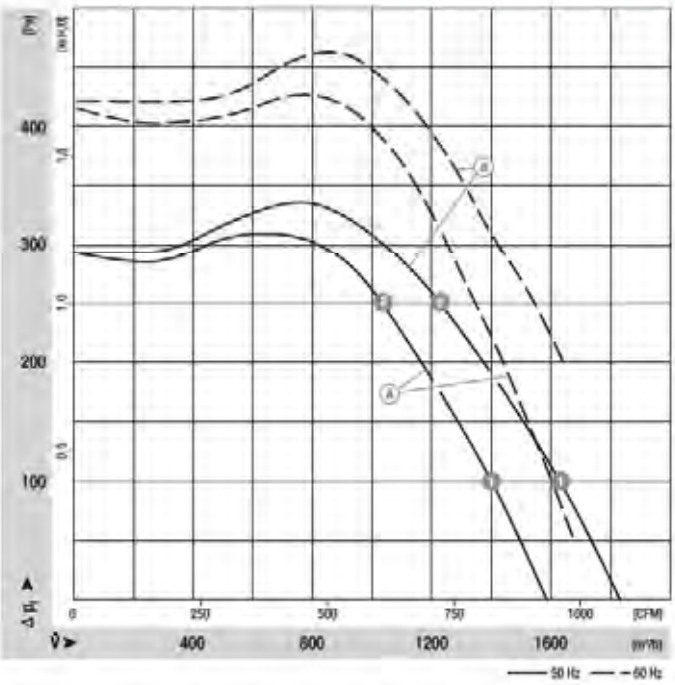

		n [rpm]	P_1 [W]	I [A]	Lp_A [dB(A)]
Ⓐ	❶	1380	325	0.69	71
Ⓐ	❷	1420	228	0.60	67
Ⓑ	❶	1345	388	0.76	74
Ⓑ	❷	1400	271	0.64	69

ebmpapst

- **Motor protection:** Design with thermal overload protector
- **Cable exit:** Diagonal
- **Protection class:** I (acc. to EN 61800-5-1)
- **Product conforming to standard:** CE
- **Options:** Ⓐ 400 VAC Δ/Y for two speed steps available on request

Centrifugal fan	Mass of centrifugal fan kg	Centrifugal blower with flange (small)	Centrifugal blower with flange (large)	Mass of centrifugal blower kg	Dimensions C	D	E	S
R4D 225-AK10 -06	6.5	G4D 225-FK10 -03	—	9.5	200.0	180.0	146.0	90.0
—	—	—	G4D 225-GK10 -03	9.7	304.0	284.0	250.0	180.0

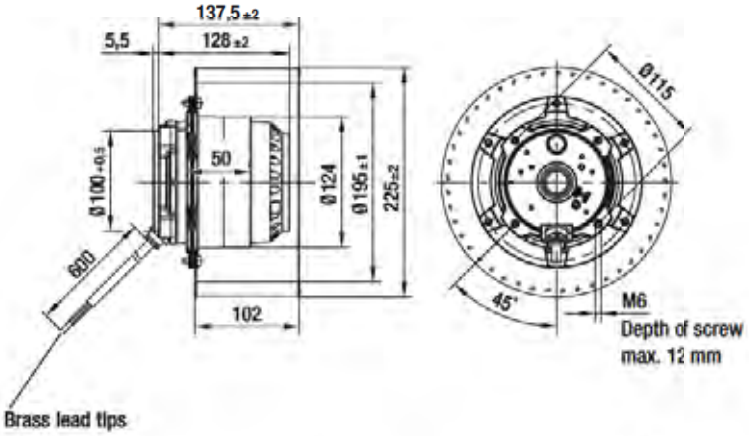

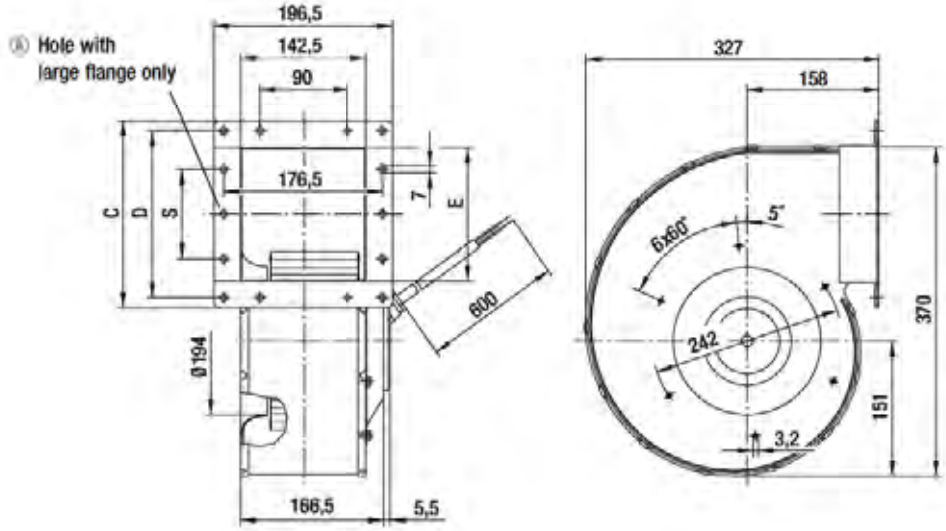

Inlet nozzle
p. 552

Electr. connections
p. 596 f.

AC centrifugal fan and blower

single inlet, Ø 225

- **Material:** Housing: Galvanised sheet steel
  Impeller: Galvanised sheet steel
  Rotor: Coated in black
- **Direction of rotation:** Clockwise, seen on rotor
- **Type of protection:** IP 54 (acc. to EN 60529)
- **Insulation class:** "F"
- **Mounting position:** Any
- **Condensate discharges:** None
- **Mode of operation:** Continuous operation (S1)
- **Bearings:** Maintenance-free ball bearings

Nominal data		Curve	Nominal voltage	Frequency	Speed/rpm (1)	Max. power input (1)	Max. current draw (1)	Capacitor	Min. back pressure	Perm. amb. temp.	Electr. connection
Type	**Motor**		**VAC**	**Hz**	**rpm**	**W**	**A**	**µF/VDB**	**Pa**	**°C**	p. 596 f.
*4E 225	M4E 094-FA	Ⓐ	1~ 230 1~ 230	50 60	1330 1500	395 500	1.98 2.30	6.0/450 6.0/450	0 100	-40 to +70 -40 to +50	A2a)
G4E 225 (2)	M4E 094-FA	Ⓑ	1~ 230 1~ 230	50 60	1260 1470	485 510	2.30 2.30	6.0/450 6.0/450	0 200	-40 to +55 -40 to +45	A2a)

subject to alterations

(1) Nominal data in operating point with maximum load (2) Data collected via exhaust duct (step diffuser, 1 m length)

Curves

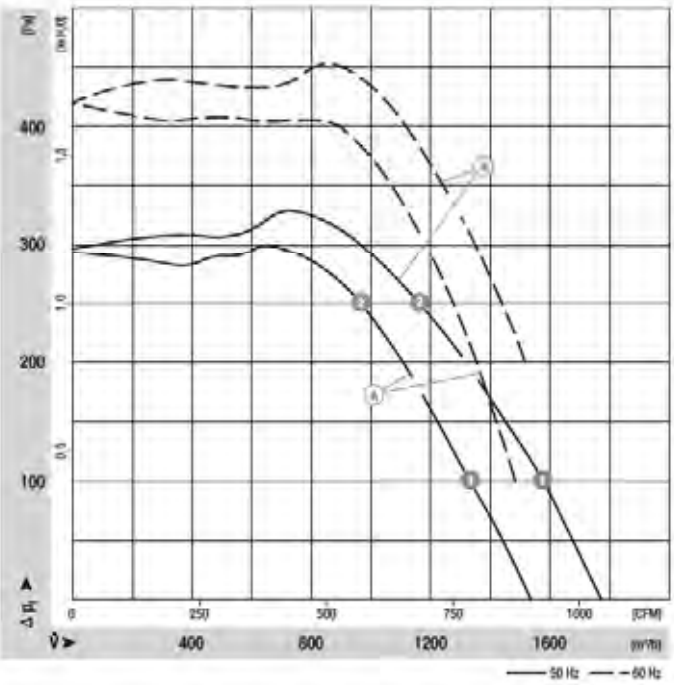

	n [rpm]	P_1 [W]	I [A]	Lp_A [dB(A)]
Ⓐ ❶	1365	339	1.75	67
Ⓐ ❷	1415	255	1.46	70
Ⓑ ❶	1320	401	2.00	74
Ⓑ ❷	1395	292	1.57	69

ebmpapst

- **Motor protection:** Design with thermal overload protector
- **Cable exit:** Diagonal
- **Protection class:** I (acc. to EN 61800-5-1)
- **Product conforming to standard:** CE

Centrifugal fan	Mass of centrifugal fan kg	Centrifugal blower with flange (small)	Centrifugal blower with flange (large)	Mass of centrifugal blower kg	Dimensions C	D	E	S
R4E 225-BK05 -03	6.6	G4E 225-DK05 -03	—	9.6	200.0	180.0	146.0	90.0
—	—	—	G4E 225-EK05 -03	9.8	304.0	284.0	250.0	180.0

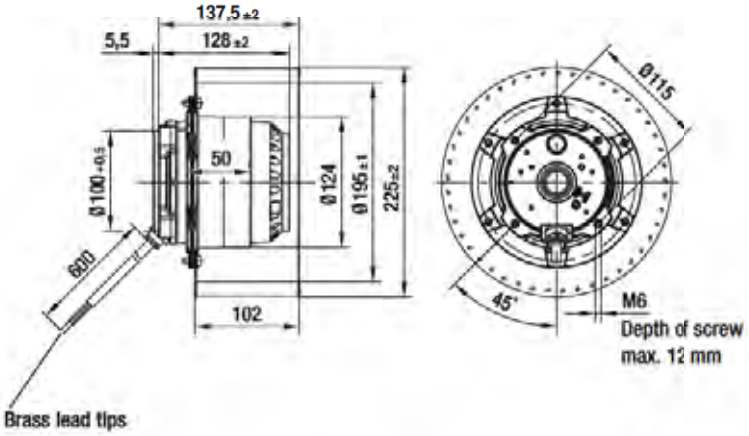

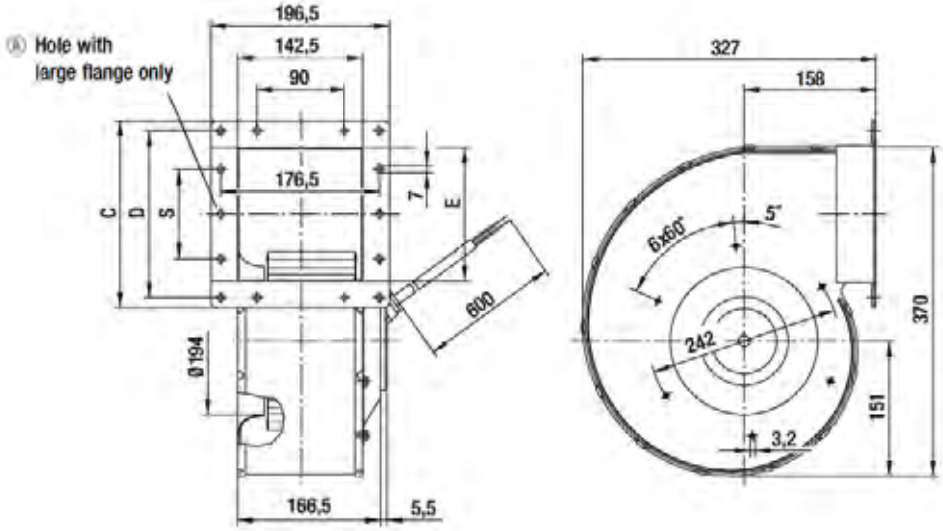

Inlet nozzle p. 552
Capacitor p. 560 f.
Electr. connections p. 596 f.

AC centrifugal fan and blower

single inlet, Ø 250

- **Material:** Housing: Galvanised sheet steel
  Impeller: Galvanised sheet steel
  Rotor: Coated in black
- **Direction of rotation:** Clockwise, seen on rotor
- **Type of protection:** IP 54 (acc. to EN 60529)
- **Insulation class:** "F"
- **Mounting position:** Any
- **Condensate discharges:** None
- **Mode of operation:** Continuous operation (S1)
- **Bearings:** Maintenance-free ball bearings

Nominal data		Curve	Nominal voltage	Frequency	Speed/rpm (1)	Max. power input (1)	Max. current draw (1)	Capacitor	Min. back pressure	Perm. amb. temp.	Electr. connection
Type	**Motor**		**VAC**	**Hz**	**rpm**	**W**	**A**	**µF/VDB**	**Pa**	**°C**	p. 596 f.
***4D 250**	M4D 094-HA	Ⓐ	3~ 400 Y 3~ 400 Y	50 60	1350 1560	590 710	1.17 1.26	— —	0 150	-40 to +80 -40 to +60	D2)
G4D 250 (2)	M4D 094-HA	Ⓑ	3~ 400 Y 3~ 400 Y	50 60	1280 1560	800 700	1.46 1.24	— —	0 300	-40 to +50 -40 to +55	D2)

subject to alterations

(1) Nominal data in operating point with maximum load (2) Data collected via exhaust duct (step diffuser, 1 m length)

Curves

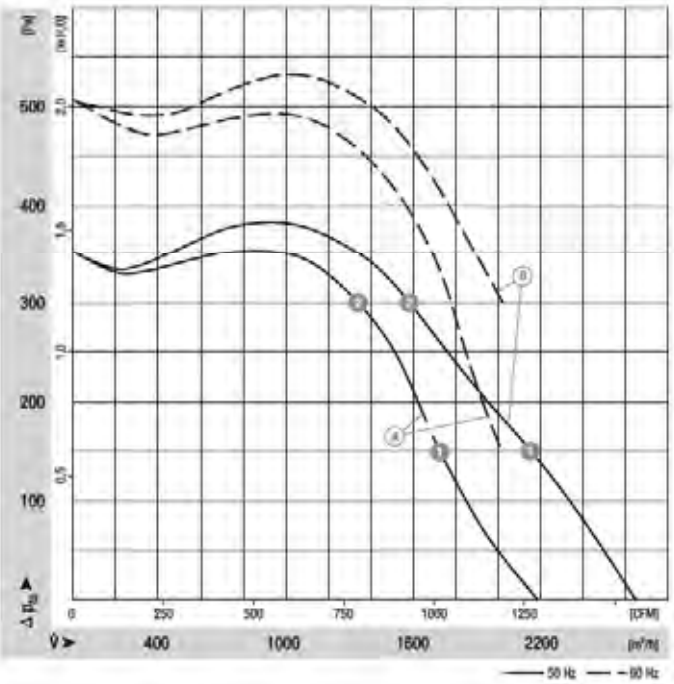

		n [rpm]	P_1 [W]	I [A]	Lp_A [dB(A)]
Ⓐ	❶	1390	444	0.99	72
Ⓐ	❷	1430	312	0.87	70
Ⓑ	❶	1330	654	1.13	76
Ⓑ	❷	1410	386	0.94	71

ebmpapst

- **Motor protection:** Design with thermal overload protector
- **Cable exit:** Diagonal
- **Protection class:** I (acc. to EN 61800-5-1)
- **Product conforming to standard:** CE
- **Options:** 400 VAC Δ/Y for two speed steps available on request

Centrifugal fan	Mass of centrifugal fan kg	Centrifugal blower with flange (small)	Centrifugal blower with flange (large)	Mass of centrifugal blower kg	Dimensions C	D	E	S	U
R4D 250-AC10 -03	9.7	G4D 250-DC10 -03	—	13.1	218.0	190.0	167.0	90.0	198.0
—	—	—	G4D 250-EC10 -03	13.5	313.0	285.0	262.0	180.0	293.0

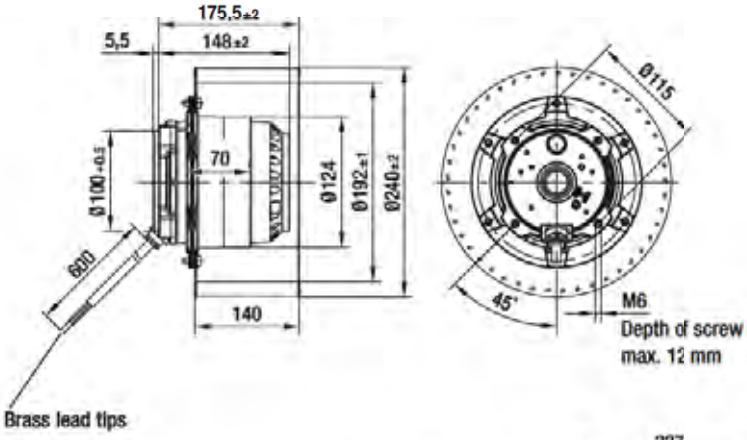

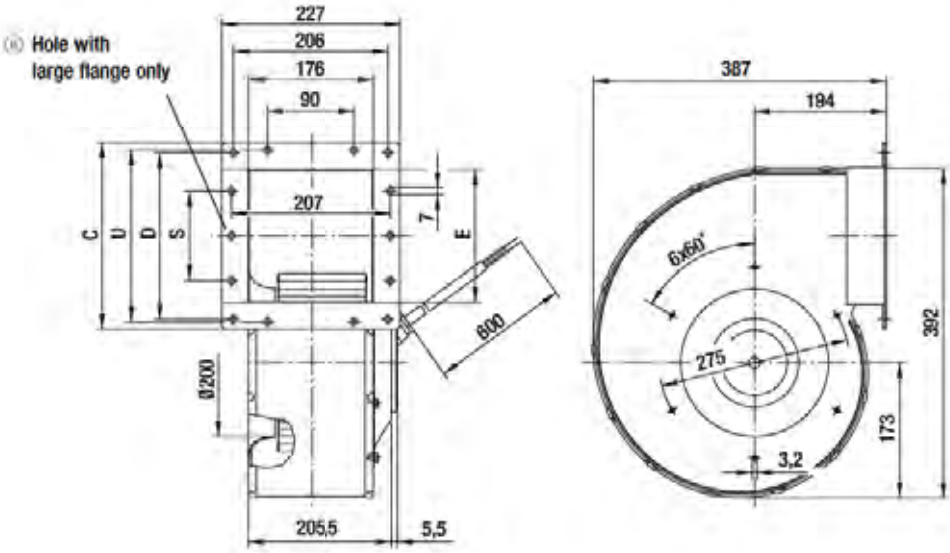

Inlet nozzle
p. 552

Electr. connections
p. 596 f.

AC centrifugal fan and blower

single inlet, Ø 250

- **Material:** Housing: Galvanised sheet steel
  Impeller: Galvanised sheet steel
  Rotor: Coated in black
- **Direction of rotation:** Clockwise, seen on rotor
- **Type of protection:** IP 54 (acc. to EN 60529)
- **Insulation class:** "F"
- **Mounting position:** Any
- **Condensate discharges:** None
- **Mode of operation:** Continuous operation (S1)
- **Bearings:** Maintenance-free ball bearings

Nominal data		Curve	Nominal voltage	Frequency	Speed/rpm (1)	Max. power input (1)	Max. current draw (1)	Capacitor	Min. back pressure	Perm. amb. temp.	Electr. connection
Type	**Motor**		**VAC**	**Hz**	**rpm**	**W**	**A**	**µF/VDB**	**Pa**	**°C**	p. 596 f.
*4E 250	M4E 094-HA	Ⓐ	1~ 230 1~ 230	50 60	1310 1470	570 690	2.48 3.05	10.0/450 10.0/450	0 100	-40 to +70 -40 to +55	A2a)
G4E 250(2)	M4E 094-HA	Ⓑ	1~ 230 1~ 230	50 60	1150 1400	760 730	3.80 3.30	10.0/450 10.0/450	0 220	-40 to +45 -40 to +55	A2a)

subject to alterations (1) Nominal data in operating point with maximum load (2) Data collected via exhaust duct (step diffuser, 1 m length)

Curves

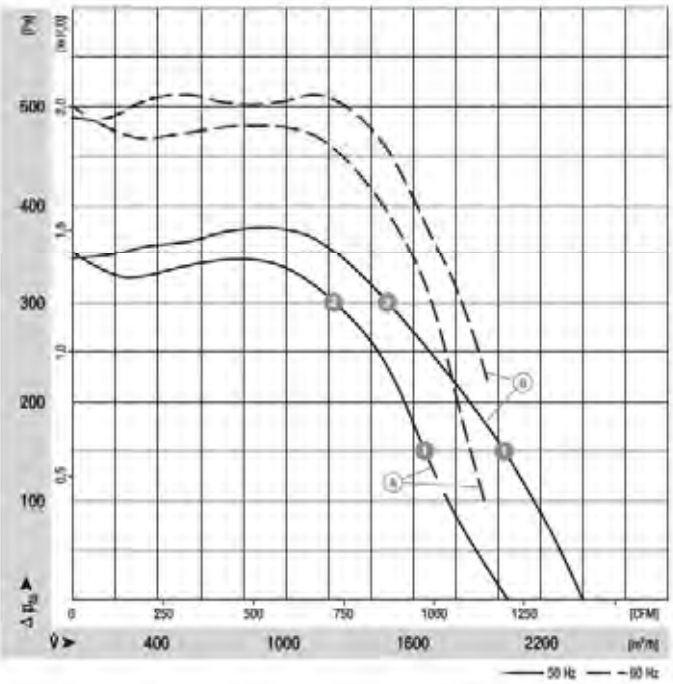

		n [rpm]	P_1 [W]	I [A]	Lp_A [dB(A)]
Ⓐ	❶	1370	448	2.25	70
Ⓐ	❷	1420	325	1.85	68
Ⓑ	❶	1310	560	2.73	73
Ⓑ	❷	1390	395	2.05	69

ebmpapst

- **Motor protection:** Design with thermal overload protector
- **Cable exit:** Diagonal
- **Protection class:** I (acc. to EN 61800-5-1)
- **Product conforming to standard:** CE

Centrifugal fan	Mass of centrifugal fan kg	Centrifugal blower with flange (small)	Centrifugal blower with flange (large)	Mass of centrifugal blower kg	Dimensions C	D	E	S	U
R4E 250-BA09 -03	9.3	G4E 250-DA09 -03	—	12.7	218.0	190.0	167.0	90.0	198.0
—	—	—	G4E 250-EA09 -03	13.1	313.0	285.0	262.0	180.0	293.0

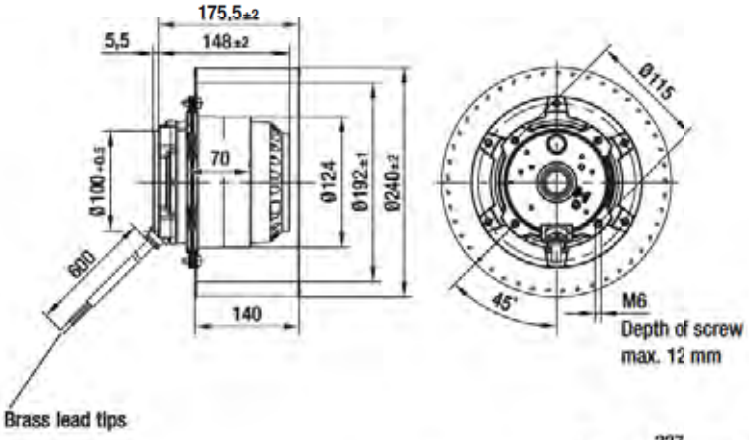

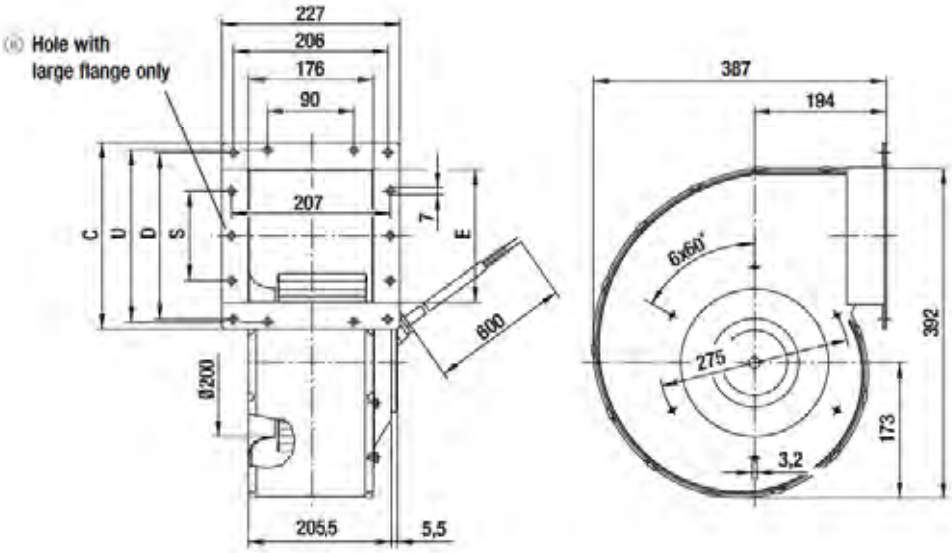

AC centrifugal fan and blowers

single inlet, Ø 250

- **Material:** Housing: Galvanised sheet steel
  Impeller: Galvanised sheet steel
  Rotor: Coated in black
- **Direction of rotation:** Clockwise, seen on rotor
- **Type of protection:** IP 54 (acc. to EN 60529)
- **Insulation class:** "F"
- **Mounting position:** Any
- **Condensate discharges:** None
- **Mode of operation:** Continuous operation (S1)
- **Bearings:** Maintenance-free ball bearings

Nominal data		Curve	Nominal voltage	Frequency	Speed/rpm (1)	Max. power input (1)	Max. current draw (1)	Capacitor	Min. back pressure	Perm. amb. temp.	Electr. connection
Type	**Motor**		**VAC**	**Hz**	**rpm**	**W**	**A**	**µF/VDB**	**Pa**	**°C**	p. 596 f.
***6E 250**	M6E 094-FA	Ⓐ	1~ 230 1~ 230	50 60	850 900	220 295	1.00 1.30	6.0/450 6.0/500	0 0	-40 to +80 -40 to +80	A2a)
G6E 250 (2)	M6E 094-FA	Ⓑ	1~ 230 1~ 230	50 60	780 760	255 305	1.15 1.35	6.0/450 6.0/500	0 0	-40 to +80 -40 to +70	A2a)

subject to alterations (1) Nominal data in operating point with maximum load (2) Data collected via exhaust duct (step diffuser, 1 m length)

Curves

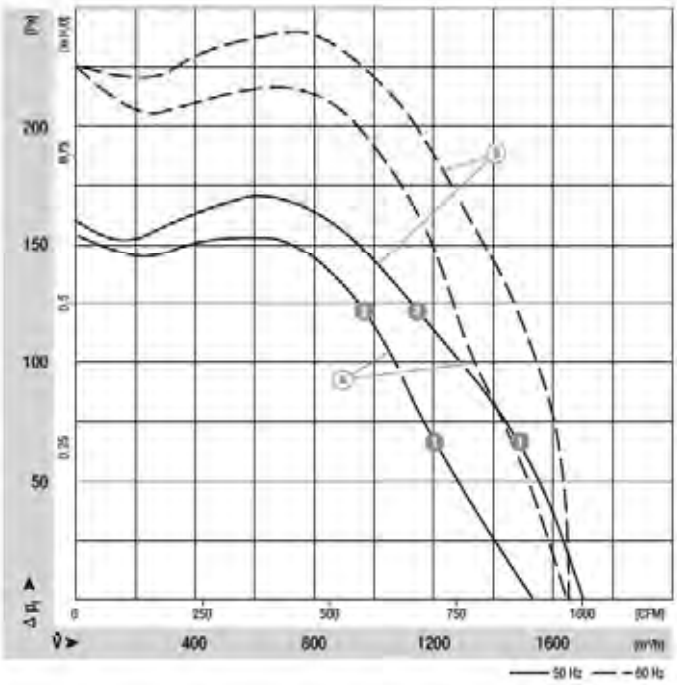

	n [rpm]	P_1 [W]	I [A]	Lp_A [dB(A)]
Ⓐ ❶	900	180	0.82	63
Ⓐ ❷	930	156	0.74	61
Ⓑ ❶	855	215	0.96	65
Ⓑ ❷	910	173	0.79	62

ebmpapst

- **Motor protection:** Design with thermal overload protector
- **Cable exit:** Diagonal
- **Protection class:** I (acc. to EN 61800-5-1)
- **Product conforming to standard:** CE

Centrifugal fan	Mass of centrifugal fan kg	Centrifugal blower with flange (small)	Centrifugal blower with flange (large)	Mass of centrifugal blower kg	Dimensions C	D	E	S	U
R6E 250-AK05 -03	7.0	G6E 250-DK05 -03	—	10.5	218.0	190.0	167.0	90.0	198.0
—	—	—	G6E 250-EK05 -03	10.9	313.0	285.0	262.0	180.0	293.0

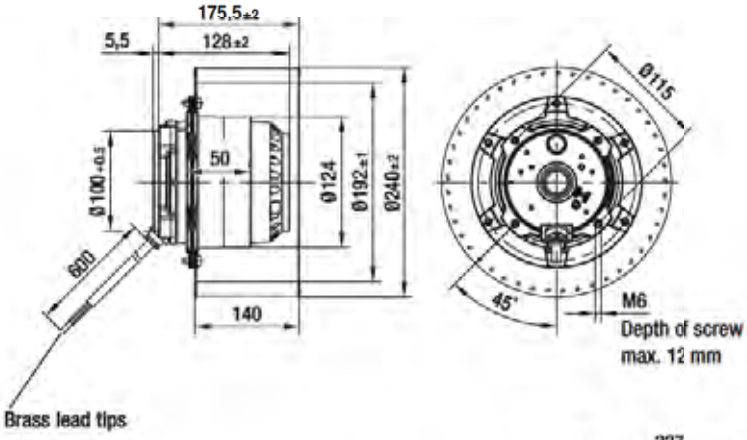

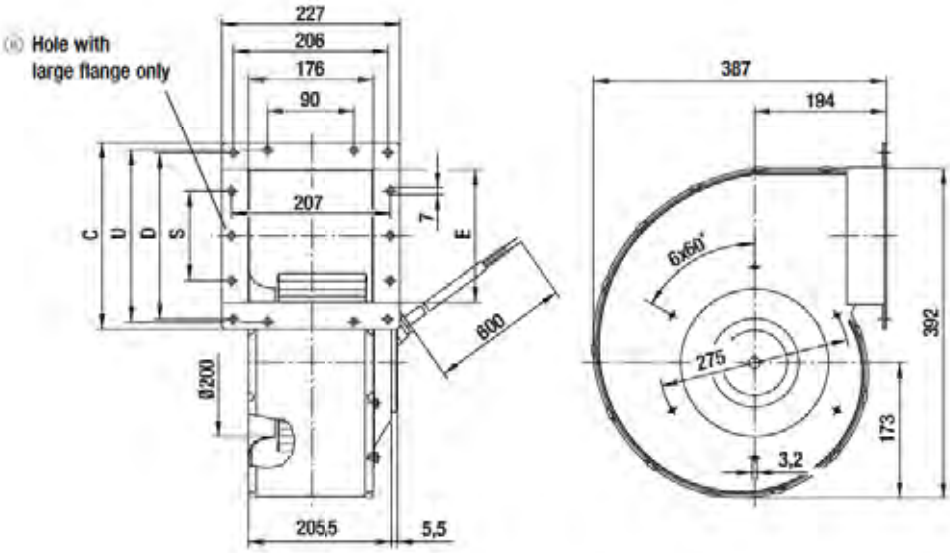

AC centrifugal fans

single inlet, Ø 250

- **Material:** Impeller: Galvanised sheet steel
  Rotor: Cast in aluminium
- **Direction of rotation:** Clockwise, seen on rotor
- **Type of protection:** IP 54 (acc. to EN 60529)
- **Insulation class:** "F"
- **Mounting position:** Any
- **Condensate discharge holes:** On rotor and stator sides
- **Mode of operation:** Continuous operation (S1)
- **Bearings:** Maintenance-free ball bearings

Nominal data		Curve	Nominal voltage	Frequency	Speed/rpm (1)	Max. power input (1)	Max. current draw (1)	Capacitor	Min. back pressure	Perm. amb. temp.	Electr. connection
Type	**Motor**		**VAC**	**Hz**	**rpm**	**kW**	**A**	**µF/VDB**	**Pa**	**°C**	p. 596 f.
R4D 250 (2)	M4D 110-GF	Ⓐ	3~ 230/400	50	1400	0.75	2.77/1.60	—	0	-25 to +80	D1)/D2)
R4E 250	M4E 110-GF	Ⓑ	1~ 230	50	1270	0.64	2.80	12.0/450	0	-25 to +80	A2a)

subject to alterations (1) Nominal data in operating point with maximum load (2) 230 VAC Δ / 400 VAC Y

Curves

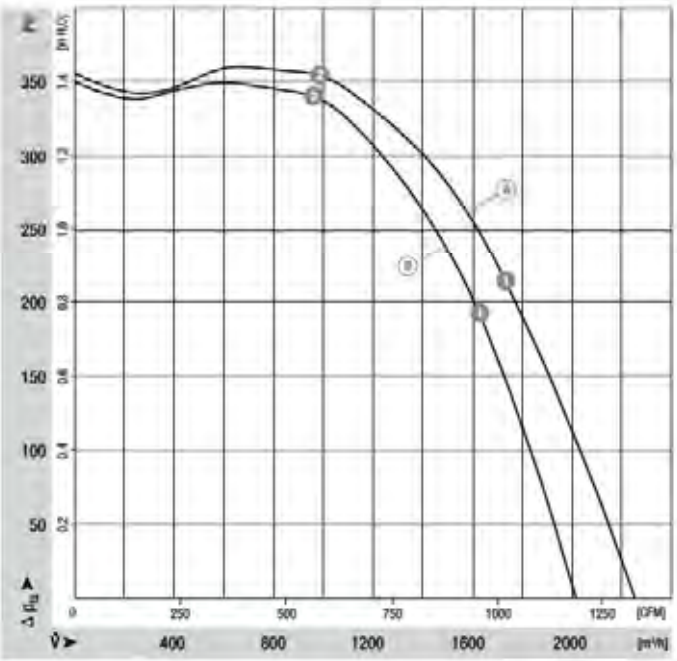

		n [rpm]	P_1 [kW]	I [A]	Lp_A [dB(A)]
Ⓐ	❶	1430	0.53	2.48/1.43	77
Ⓐ	❷	1460	0.32	2.23/1.29	70
Ⓑ	❶	1370	0.49	2.14	76
Ⓑ	❷	1430	0.33	1.49	70

- **Motor protection:** Design with thermal overload protector
- **Cable exit:** Diagonal
- **Protection class:** I (acc. to EN 61800-5-1)
- **Product conforming to standard:** CE
- **Approvals:** VDE (acc. to EN 60034)

Centrifugal fan	Mass of centrifugal fan kg	Inlet nozzle	Flange
R4D 250-CG01 -01	12.0	25010-2-4013	94250-2-4017
R4E 250-CG01 -01	12.0	25010-2-4013	94250-2-4017

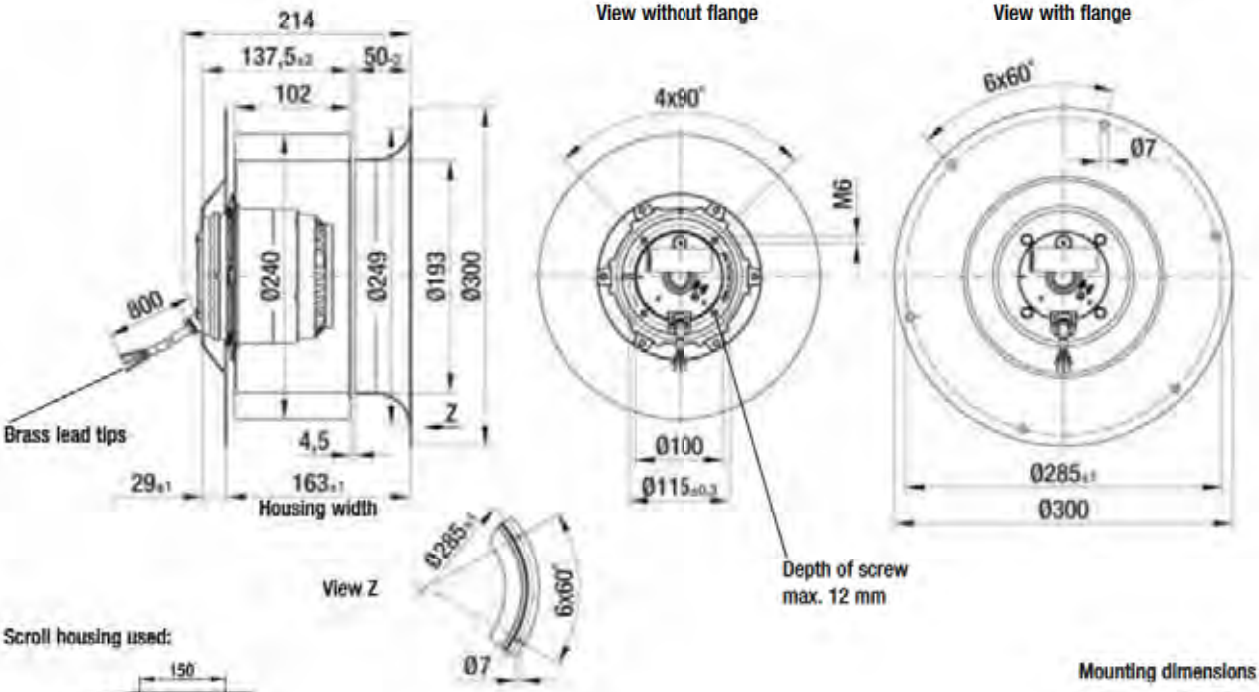

Scroll housing used:

Mounting dimensions

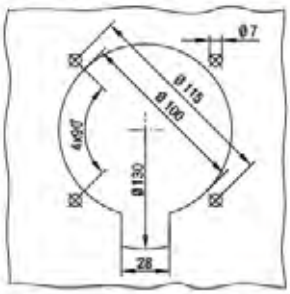

AC centrifugal fans

single inlet, Ø 250

- **Material:** Impeller: Galvanised sheet steel
  Rotor: Ⓐ cast in aluminium, Ⓑ coated in black
- **Direction of rotation:** Clockwise, seen on rotor
- **Type of protection:** IP 54 (acc. to EN 60529)
- **Insulation class:** "F"
- **Mounting position:** Any
- **Condensate discharge holes:** Ⓐ on rotor and stator sides, Ⓑ none
- **Mode of operation:** Continuous operation (S1)
- **Bearings:** Maintenance-free ball bearings

Nominal data		Curve	Nominal voltage	Frequency	Speed/rpm (1)	Max. power input (1)	Max. current draw (1)	Capacitor	Min. back pressure	Perm. amb. temp.	Electr. connection
Type	**Motor**		**VAC**	**Hz**	**rpm**	**kW**	**A**	**µF/VDB**	**Pa**	**°C**	p. 596 f.
R6D 250 (2)	M6D 110-EF	Ⓐ	3~ 230/400	50	930	0.27	1.25/0.72	—	0	-25 to +95	D1)/D2)
R6E 250	M6E 094-FA	Ⓑ	1~ 230	50	800	0.26	1.16	6.0/450	0	-25 to +90	A2a)

subject to alterations (1) Nominal data in operating point with maximum load (2) 230 VAC Δ / 400 VAC Y

Curves

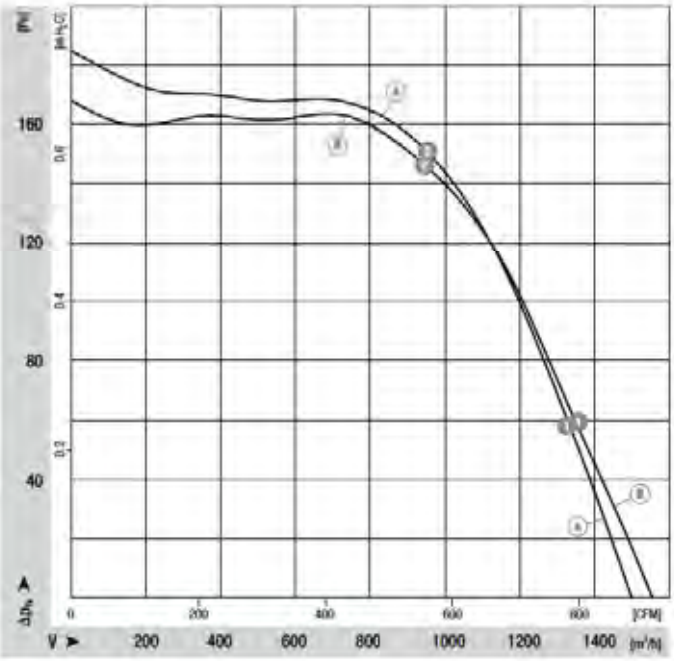

		n [rpm]	P_1 [kW]	I [A]	Lp_A [dB(A)]
Ⓐ	❶	945	0.23	1.18/0.68	68
Ⓐ	❷	965	0.17	1.11/0.64	63
Ⓑ	❶	875	0.22	1.00	67
Ⓑ	❷	930	0.17	0.81	62

ebmpapst

- **Motor protection:** Design with thermal overload protector
- **Cable exit:** Diagonal
- **Protection class:** I (acc. to EN 61800-5-1)
- **Product conforming to standard:** CE
- **Approvals:** VDE (acc. to EN 60034)

Centrifugal fan	Mass of centrifugal fan kg	Dimensions l	Inlet nozzle	Flange
R6D 250-CE01 -01	9.5	800.0	25010-2-4013	94250-2-4017
R6E 250-CA08 -01	7.0	600.0	25010-2-4013	94250-2-4017

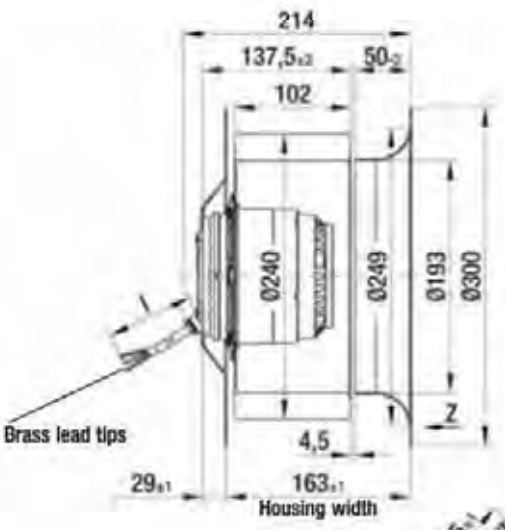

View without flange

View with flange

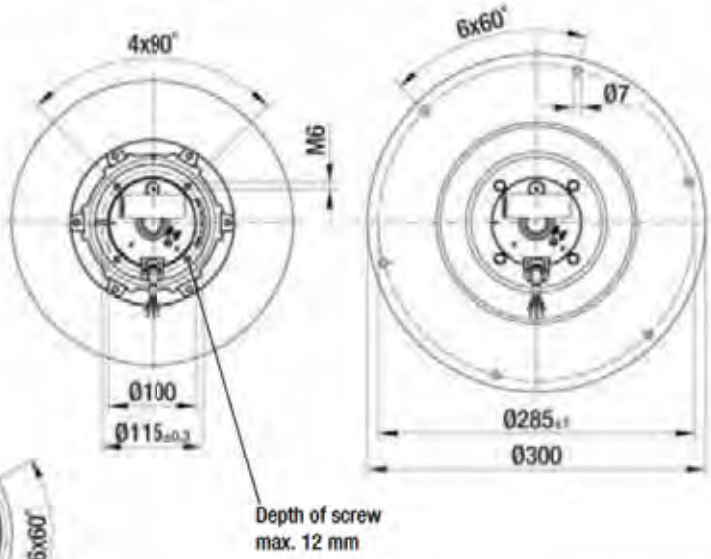

Scroll housing used:

Mounting dimensions Ⓑ

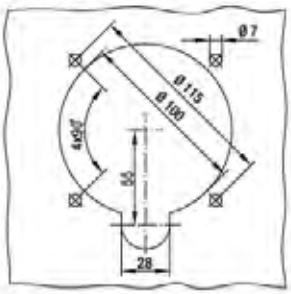

Mounting dimensions Ⓐ

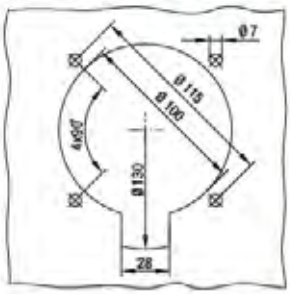

Inlet nozzle p. 552
Capacitor p. 560 f.
Electr. connections p. 596 f.

AC centrifugal fan and blower

single inlet, Ø 280

- **Material:** Housing: Galvanised sheet steel
  Impeller: Galvanised sheet steel
  Rotor: Coated in black
- **Direction of rotation:** Clockwise, seen on rotor
- **Type of protection:** IP 20 (acc. to EN 60529)
- **Insulation class:** "F"
- **Mounting position:** Shaft horizontal or rotor on bottom; rotor on top on request
- **Condensate discharges:** None
- **Mode of operation:** Continuous operation (S1)
- **Bearings:** Maintenance-free ball bearings

Nominal data		Curve	Nominal voltage	Frequency	Speed/rpm (1)	Max. power input (1)	Max. current draw (1)	Capacitor	Min. back pressure	Perm. amb. temp.	Electr. connection
Type	**Motor**		**VAC**	**Hz**	**rpm**	**W**	**A**	**µF/VDB**	**Pa**	**°C**	p. 596 f.
*4E 280	M4E 094-HA	Ⓐ	1~ 230 1~ 230	50 60	1100 1350	1080 990	5.30 4.70	12.0/400 12.0/450	100 400	-40 to +60 -40 to +55	A2a)

subject to alterations

(1) Nominal data in operating point with maximum load

Curves

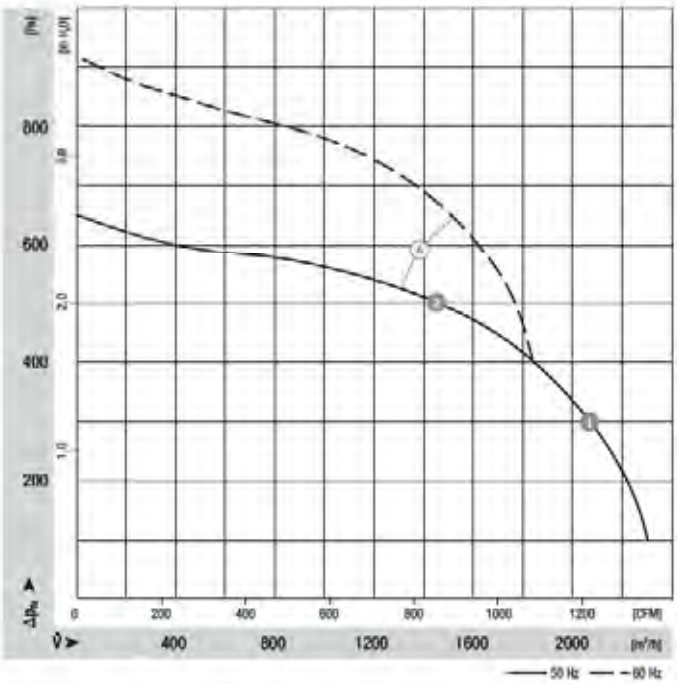

		n [rpm]	P_1 [W]	I [A]	Lp_A [dB(A)]
Ⓐ	❶	1250	845	4.20	73
Ⓐ	❷	1380	555	3.02	73

ebmpapst

- **Motor protection:** Design with thermal overload protector
- **Cable exit:** Diagonal
- **Protection class:** I (acc. to EN 61800-5-1)
- **Product conforming to standard:** CE

Centrifugal fan	Mass of centrifugal fan kg	Centrifugal blower with flange (small)	Mass of centrifugal blower kg
R4E 280-CC21 -01	10.2	G4E 280-CA21 -01	14.0

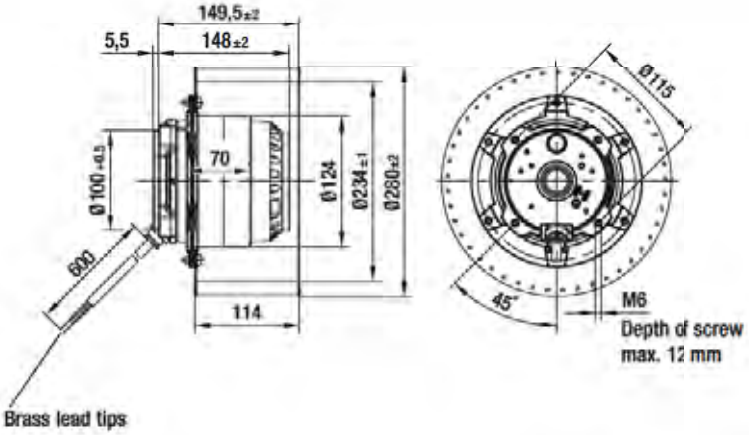

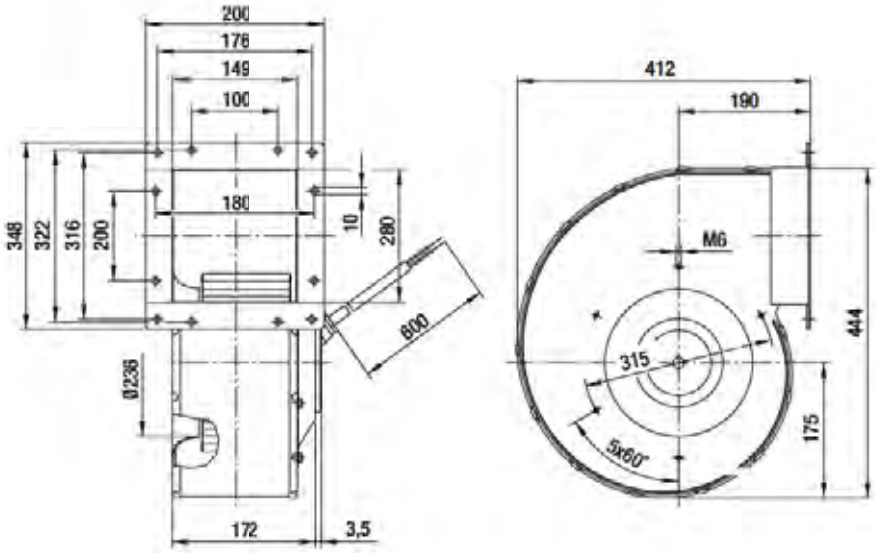

AC centrifugal fans

single inlet, Ø 280

- **Material:** Impeller: Galvanised sheet steel
  Rotor: Cast in aluminium
- **Direction of rotation:** Clockwise, seen on rotor
- **Type of protection:** IP 54 (acc. to EN 60529)
- **Insulation class:** "F"
- **Mounting position:** Any
- **Condensate discharge holes:** On rotor and stator sides
- **Mode of operation:** Continuous operation (S1)
- **Bearings:** Maintenance-free ball bearings

Nominal data		Curve	Nominal voltage	Frequency	Speed/rpm (1)	Max. power input (1)	Max. current draw (1)	Capacitor	Min. back pressure	Perm. amb. temp.	Electr. connection
Type	**Motor**		**VAC**	**Hz**	**rpm**	**kW**	**A**	**µF/VDB**	**Pa**	**°C**	p. 596 f.
R4D 280 (2)	M4D 110-IA	Ⓐ	3~ 230/400	50	1330	132	4.75/2.75	—	0	-25 to +65	D1)/D2)
R4E 280	M4E 110-IA	Ⓑ	1~ 230	50	1230	105	4.75	16.0/450	100	-25 to +50	A2a)

subject to alterations (1) Nominal data in operating point with maximum load (2) 230 VAC Δ / 400 VAC Y

Curves

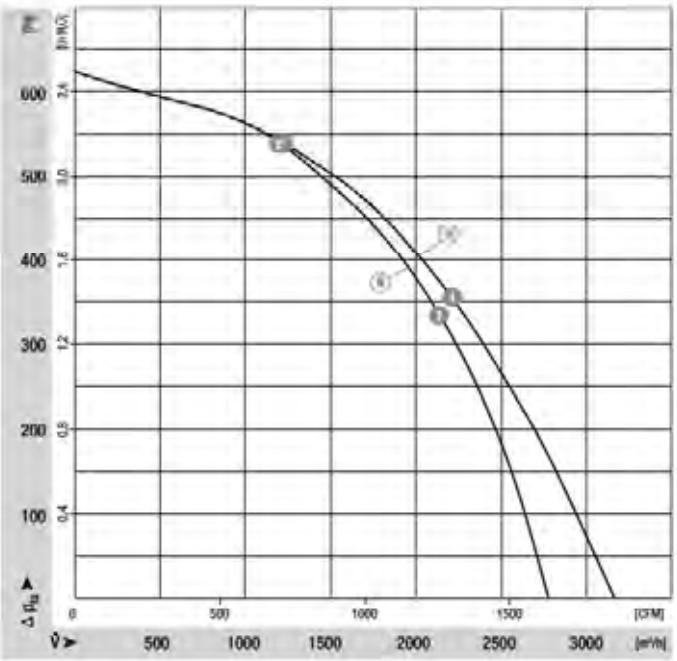

		n [rpm]	P_1 [kW]	I [A]	Lp_A [dB(A)]
Ⓐ	❶	1390	0.87	3.79/2.19	77
Ⓐ	❷	1440	0.51	3.29/1.90	72
Ⓑ	❶	1340	0.82	3.59	76
Ⓑ	❷	1425	0.54	2.34	72

ebmpapst

- **Motor protection:** Design with thermal overload protector
- **Cable exit:** Diagonal
- **Protection class:** I (acc. to EN 61800-5-1)
- **Product conforming to standard:** CE
- **Approvals:** VDE (acc. to EN 60034)

Centrifugal fan	Mass of centrifugal fan kg	Inlet nozzle	Flange
R4D 280-CI03 -01	14.5	28010-2-4013	10280-2-4017
R4E 280-CI01 -01	14.5	28010-2-4013	10280-2-4017

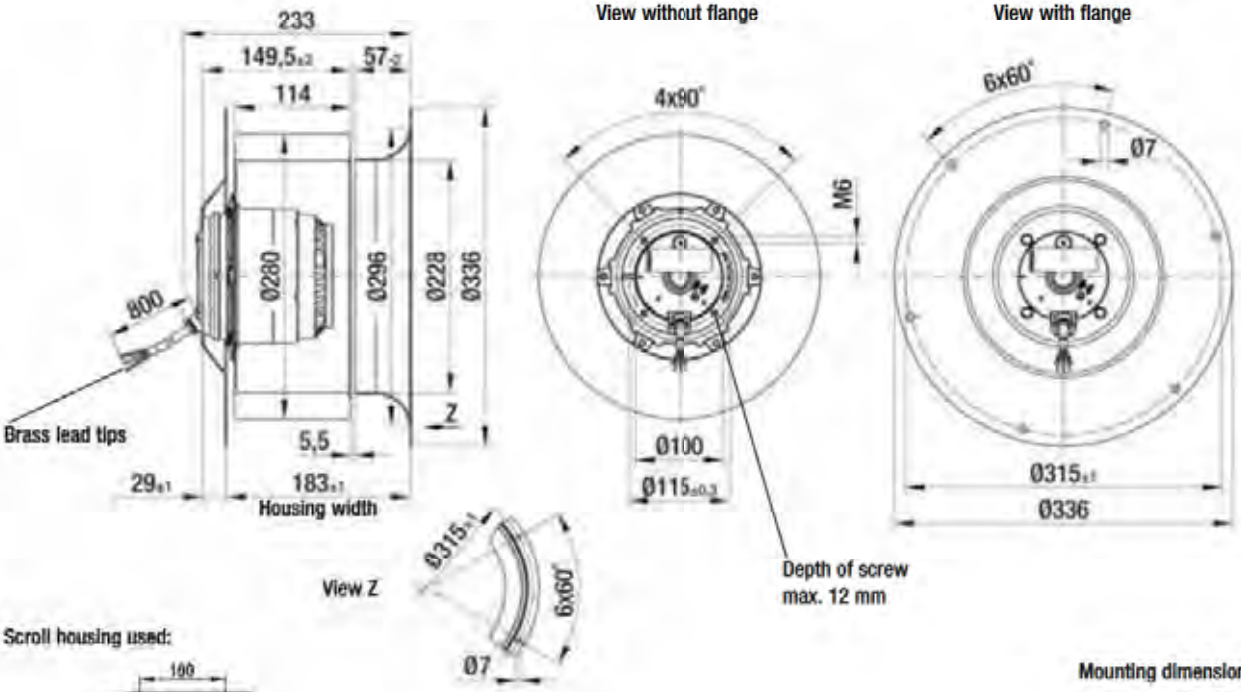

Scroll housing used:

Mounting dimensions

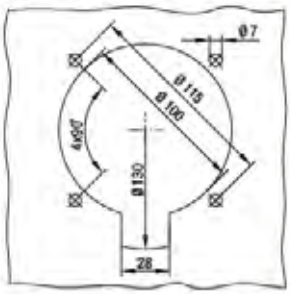

AC centrifugal fans

single inlet, Ø 280

- **Material:** Impeller: Galvanised sheet steel
  Rotor: Ⓐ cast in aluminium, Ⓑ coated in black
- **Direction of rotation:** Clockwise, seen on rotor
- **Type of protection:** IP 54 (acc. to EN 60529)
- **Insulation class:** "F"
- **Mounting position:** Any
- **Condensate discharge holes:** Ⓐ on rotor and stator sides, Ⓑ none
- **Mode of operation:** Continuous operation (S1)
- **Bearings:** Maintenance-free ball bearings

Nominal data		Curve	Nominal voltage	Frequency	Speed/rpm (1)	Max. power input (1)	Max. current draw (1)	Capacitor	Min. back pressure	Perm. amb. temp.	Electr. connection
Type	**Motor**		**VAC**	**Hz**	**rpm**	**kW**	**A**	**µF/VDB**	**Pa**	**°C**	p. 596 f.
R6D 280 (2)	M6D 110-EF	Ⓐ	3~ 230/400	50	870	0.45	1.56/0.90	—	0	-25 to +70	D1)/D2)
R6E 280	M6E 094-HA	Ⓑ	1~ 230	50	795	0.42	1.95	12.0/450	0	-25 to +55	A2a)

subject to alterations (1) Nominal data in operating point with maximum load (2) 230 VAC Δ / 400 VAC Y

Curves

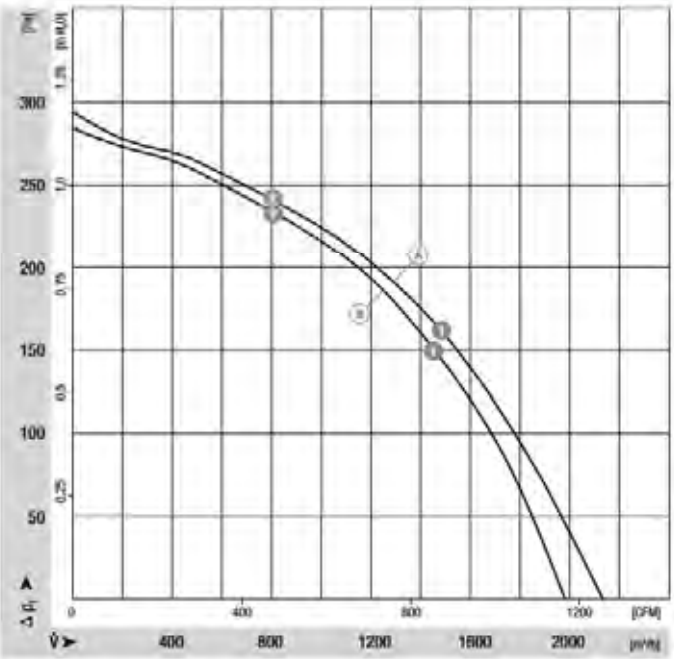

		n [rpm]	P_1 [kW]	I [A]	Lp_A [dB(A)]
Ⓐ	❶	930	0.29	1.30/0.75	66
Ⓐ	❷	960	0.18	1.16/0.67	61
Ⓑ	❶	890	0.34	1.60	66
Ⓑ	❷	940	0.27	1.37	61

ebmpapst

- **Motor protection:** Design with thermal overload protector
- **Cable exit:** Diagonal
- **Protection class:** I (acc. to EN 61800-5-1)
- **Product conforming to standard:** CE
- **Approvals:** ⓢ VDE (acc. to EN 60034)

Centrifugal fan	Mass of centrifugal fan kg	Dimensions l	Inlet nozzle	Flange
R6D 280-CE01 -01	10.0	800.0	28010-2-4013	10280-2-4017
R6E 280-CC05 -01	9.5	600.0	28010-2-4013	10280-2-4017

View without flange

View with flange

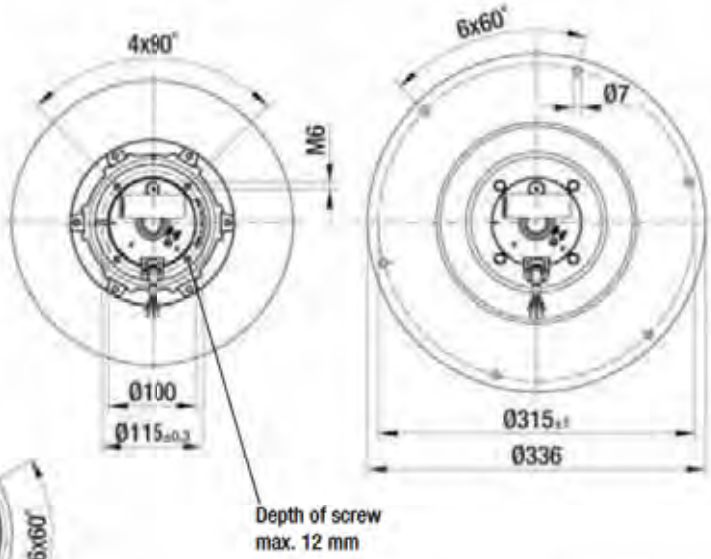

Scroll housing used:

Mounting dimensions ⓑ

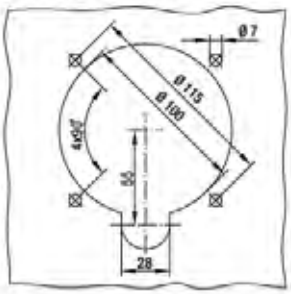

Mounting dimensions Ⓐ

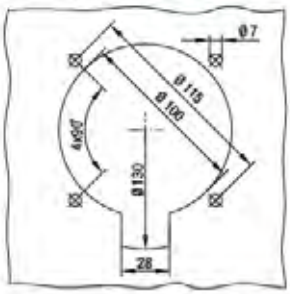

Inlet nozzle p. 552
Capacitor p. 560 f.
Electr. connections p. 596 f.

AC centrifugal fan

single inlet, Ø 310

- **Material:** Impeller: Galvanised sheet steel
  Rotor: Cast in aluminium
- **Direction of rotation:** Clockwise, seen on rotor
- **Type of protection:** IP 54 (acc. to EN 60529)
- **Insulation class:** "F"
- **Mounting position:** Any
- **Condensate discharge holes:** On rotor and stator sides
- **Mode of operation:** Continuous operation (S1)
- **Bearings:** Maintenance-free ball bearings

Nominal data		Curve	Nominal voltage	Frequency	Speed/rpm (1)	Max. power input (1)	Max. current draw (1)	Capacitor	Min. back pressure	Perm. amb. temp.	Electr. connection
Type	**Motor**		**VAC**	**Hz**	**rpm**	**kW**	**A**	**µF/VDB**	**Pa**	**°C**	p. 596 f.
R4D 310 (2)	M4D 138-HF	Ⓐ	3~ 230/400	50	1310	218	6.75/3.90	—	0	-25 to +55	D1)/D2)

subject to alterations (1) Nominal data in operating point with maximum load (2) 230 VAC Δ / 400 VAC Y

Curves

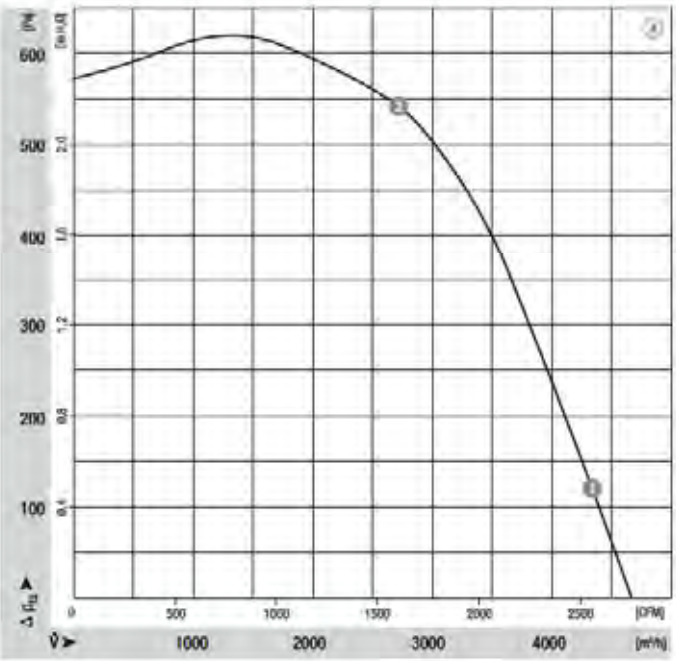

		n [rpm]	P_1 [kW]	I [A]	Lp_A [dB(A)]
Ⓐ	1	1330	1.96	6.29/3.63	82
Ⓐ	2	1410	1.12	4.43/2.56	77

ebmpapst

- **Motor protection:** Design with thermal overload protector
- **Cable exit:** Lateral
- **Protection class:** I (acc. to EN 61800-5-1)
- **Product conforming to standard:** CE
- **Approvals:** VDE (acc. to EN 60034)

Centrifugal fan	Mass of centrifugal fan kg	Inlet nozzle	Flange
R4D 310-CK03 -01	24.5	31010-2-4013	38310-2-4017

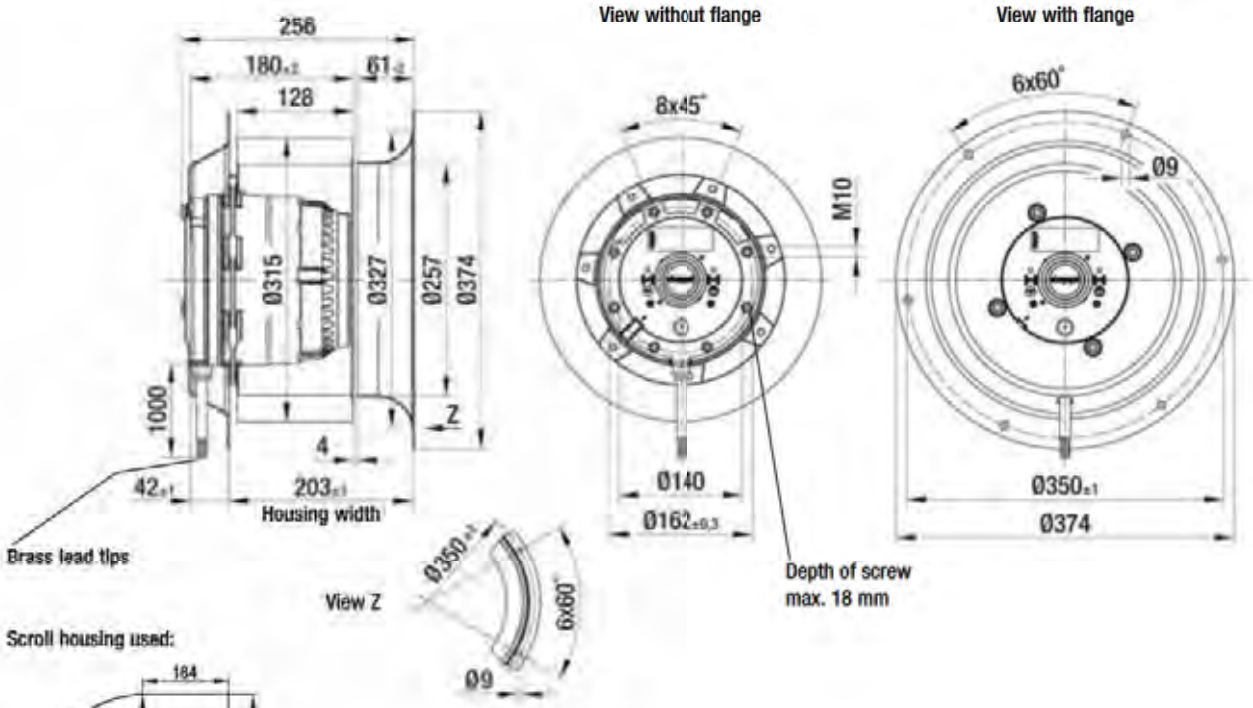

Scroll housing used:

Inlet nozzle
p. 552

Electr. connections
p. 596 f.

AC centrifugal fans

single inlet, Ø 310

- **Material:** Impeller: Galvanised sheet steel
  Rotor: Cast in aluminium
- **Direction of rotation:** Clockwise, seen on rotor
- **Type of protection:** IP 54 (acc. to EN 60529)
- **Insulation class:** "F"
- **Mounting position:** Any
- **Condensate discharge holes:** On rotor and stator sides
- **Mode of operation:** Continuous operation (S1)
- **Bearings:** Maintenance-free ball bearings

Nominal data		Curve	Nominal voltage	Frequency	Speed/rpm (1)	Max. power input (1)	Max. current draw (1)	Capacitor	Min. back pressure	Perm. amb. temp.	Electr. connection
Type	**Motor**		**VAC**	**Hz**	**rpm**	**kW**	**A**	**µF/VDB**	**Pa**	**°C**	p. 596 f.
R6D 310 (2)	M6D 110-GF	Ⓐ	3~ 230/400	50	840	0.76	2.50/1.45	—	50	-25 to +50	D1)/D2)
R6E 310	M6E 110-IA	Ⓑ	1~ 230	50	800	0.77	3.37	16.0/400	0	-25 to +65	A2a)

subject to alterations (1) Nominal data in operating point with maximum load (2) 230 VAC Δ / 400 VAC Y

Curves

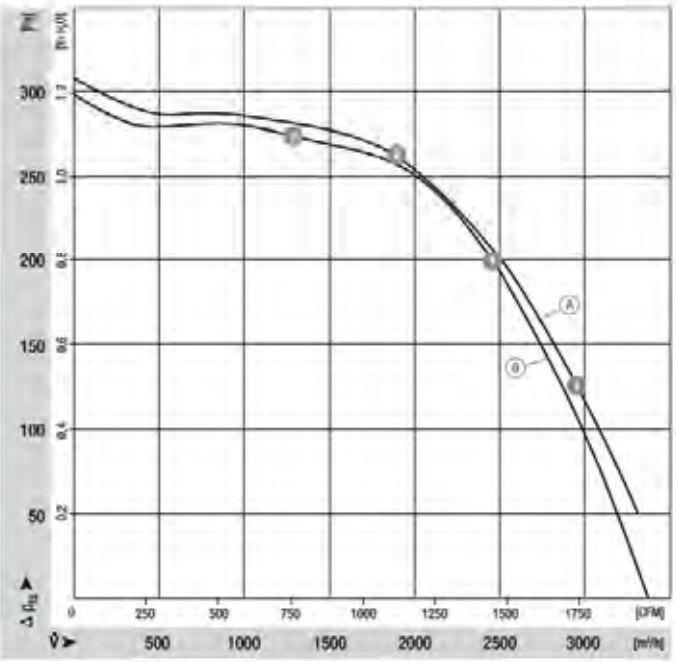

		n [rpm]	P_1 [kW]	I [A]	Lp_A [dB(A)]
Ⓐ	❶	870	0.65	2.25/1.30	72
Ⓐ	❷	930	0.40	1.75/1.01	67
Ⓑ	❶	900	0.58	2.81	70
Ⓑ	❷	950	0.42	2.32	65

- **Motor protection:** Design with thermal overload protector
- **Cable exit:** Diagonal
- **Protection class:** I (acc. to EN 61800-5-1)
- **Product conforming to standard:** CE
- **Approvals:** VDE (acc. to EN 60034)

Centrifugal fan	Mass of centrifugal fan kg	Inlet nozzle	Flange
R6D 310-CG03 -01	12.5	31010-2-4013	10310-2-4017
R6E 310-CI01 -01	15.0	31010-2-4013	10310-2-4017

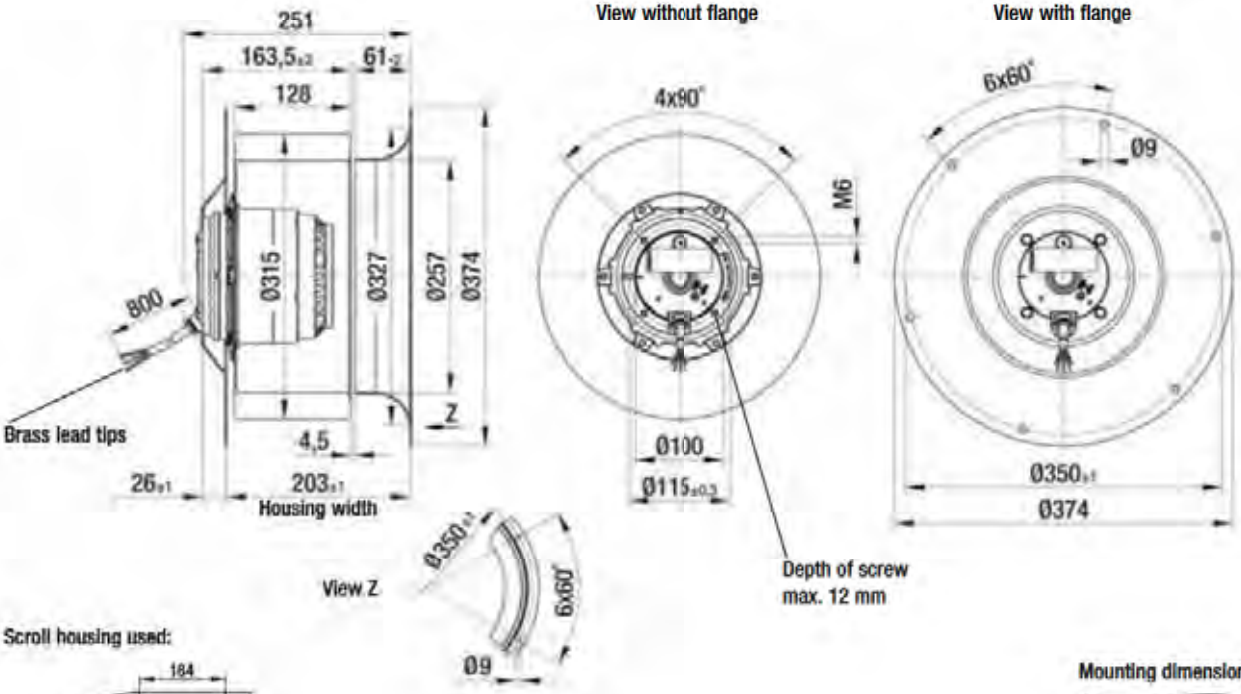

Scroll housing used:

Mounting dimensions

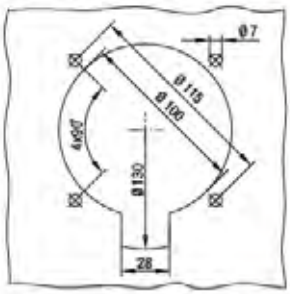

Inlet nozzle p. 552
Capacitor p. 560 f.
Electr. connections p. 596 f.

AC centrifugal fan

single inlet, Ø 355

- **Material:** Impeller: Galvanised sheet steel
  Rotor: Cast in aluminium
- **Direction of rotation:** Clockwise, seen on rotor
- **Type of protection:** IP 20 (acc. to EN 60529)
- **Insulation class:** "F"
- **Mounting position:** Any
- **Condensate discharges:** None
- **Mode of operation:** Continuous operation (S1)
- **Bearings:** Maintenance-free ball bearings

Nominal data

Type	Motor	Curve	Nominal voltage	Frequency	Speed/rpm (1)	Max. power input (1)	Max. current draw (1)	Capacitor	Min. back pressure	Perm. amb. temp.	Electr. connection
			VAC	Hz	rpm	kW	A	µF/VDB	Pa	°C	p. 596 f.
R4D 355 (2)	M4D 138-LA	Ⓐ	3~ 230/400	50	1300	4.36	13.75/7.95	—	0	-25 to +70	D1)/D2)

subject to alterations (1) Nominal data in operating point with maximum load (2) 230 VAC Δ / 400 VAC Y

Curves

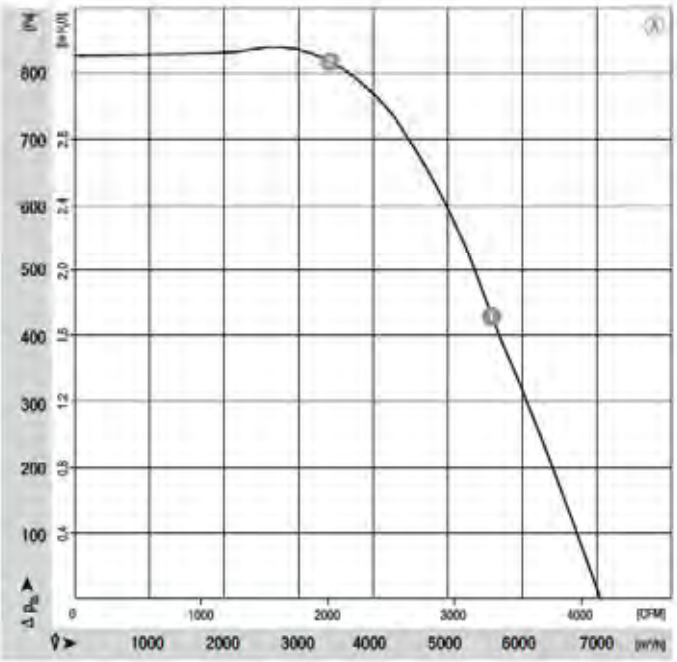

	n [rpm]	P_1 [kW]	I [A]	Lp_A [dB(A)]
Ⓐ ❶	1370	3.20	10.58/6.11	86
Ⓐ ❷	1430	1.89	7.52/4.34	80

ebmpapst

- **Motor protection:** Design with thermal overload protector
- **Cable exit:** Lateral
- **Protection class:** I (acc. to EN 61800-5-1)
- **Product conforming to standard:** CE
- **Approvals:** VDE (acc. to EN 60034)

Centrifugal fan	Mass of centrifugal fan kg	Inlet nozzle	Flange
R4D 355-CM03-01	28.0	35510-2-4013	38355-2-4017

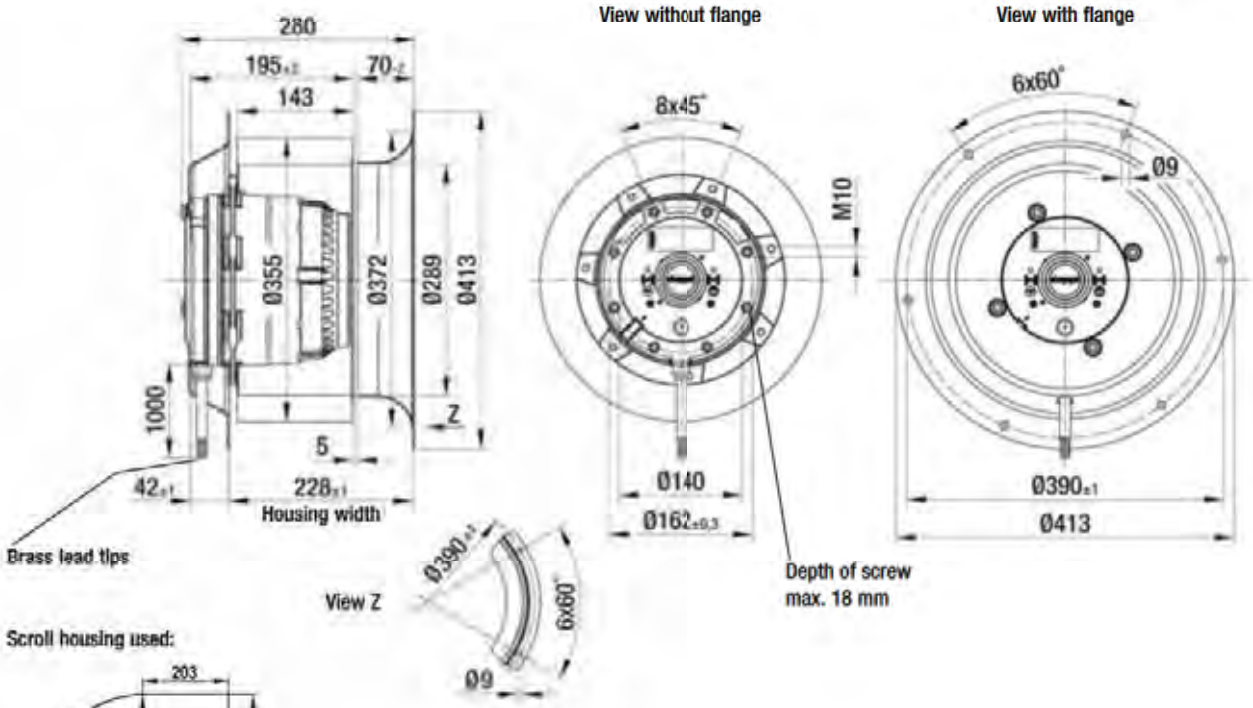

Scroll housing used:

AC centrifugal fans

single inlet, Ø 355

- **Material:** Impeller: Galvanised sheet steel
  Rotor: Cast in aluminium
- **Direction of rotation:** Clockwise, seen on rotor
- **Type of protection:** IP 54 (acc. to EN 60529)
- **Insulation class:** "F"
- **Mounting position:** Any
- **Condensate discharge holes:** On rotor and stator sides
- **Mode of operation:** Continuous operation (S1)
- **Bearings:** Maintenance-free ball bearings

Nominal data		Curve	Nominal voltage	Frequency	Speed/rpm (1)	Max. power input (1)	Max. current draw (1)	Capacitor	Min. back pressure	Perm. amb. temp.	Electr. connection
Type	**Motor**		**VAC**	**Hz**	**rpm**	**kW**	**A**	**µF/VDB**	**Pa**	**°C**	p. 596 f.
R6D 355 (2)	M6D 110-IA	Ⓐ	3~ 230/400	50	865	0.90	3.05/1.77	—	250	-25 to +50	D1)/D2)
R6E 355	M6E 110-IA	Ⓑ	1~ 230	50	830	0.83	3.90	16.0/400	175	-25 to +55	A2a)

subject to alterations (1) Nominal data in operating point with maximum load (2) 230 VAC Δ / 400 VAC Y

Curves

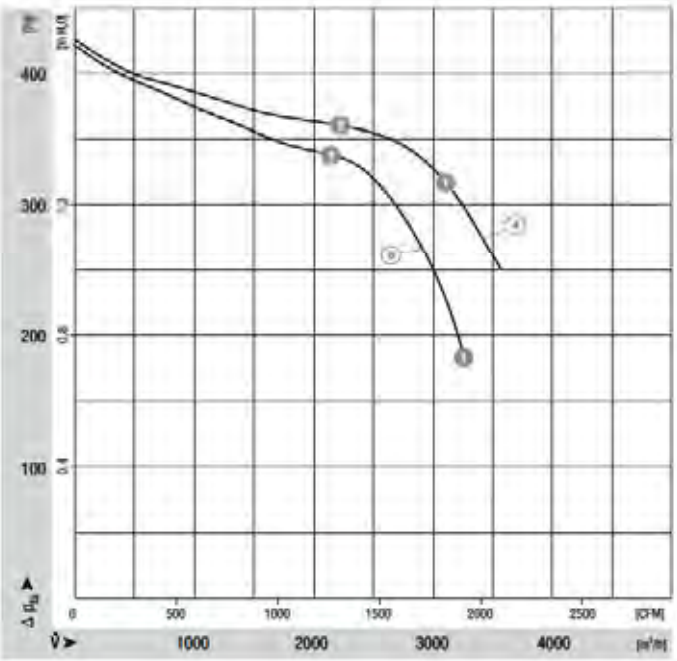

		n [rpm]	P_1 [kW]	I [A]	Lp_A [dB(A)]
Ⓐ	❶	890	0.78	2.82/1.63	70
Ⓐ	❷	920	0.59	2.44/1.41	68
Ⓑ	❶	830	0.83	3.90	70
Ⓑ	❷	890	0.61	2.90	67

ebmpapst

- **Motor protection:** Design with thermal overload protector
- **Cable exit:** Diagonal
- **Protection class:** I (acc. to EN 61800-5-1)
- **Product conforming to standard:** CE
- **Approvals:** VDE (acc. to EN 60034)

Centrifugal fan	Mass of centrifugal fan kg	Inlet nozzle	Flange
R6D 355-CI05 -01	15.5	35510-2-4013	10355-2-4017
R6E 355-CI01 -01	15.5	35510-2-4013	10355-2-4017

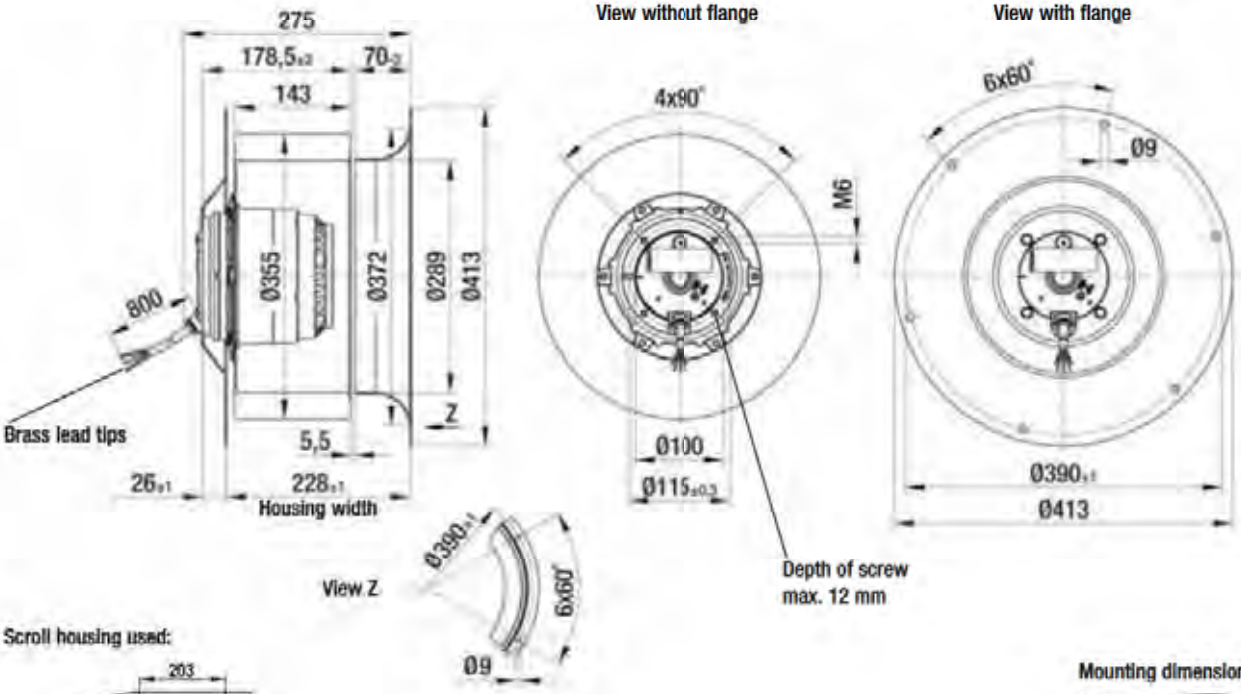

Scroll housing used:

Mounting dimensions

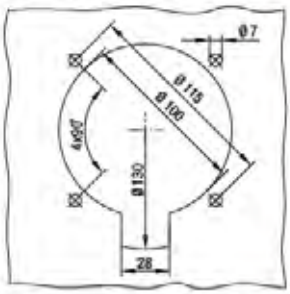

AC centrifugal fan

single inlet, Ø 400

- **Material:** Impeller: Galvanised sheet steel
  Rotor: Cast in aluminium
- **Direction of rotation:** Clockwise, seen on rotor
- **Type of protection:** IP 20 (acc. to EN 60529)
- **Insulation class:** "F"
- **Mounting position:** Any
- **Condensate discharges:** None
- **Mode of operation:** Continuous operation (S1)
- **Bearings:** Maintenance-free ball bearings

Nominal data

Type	Motor	Curve	Nominal voltage VAC	Frequency Hz	Speed/rpm (1) rpm	Max. power input (1) kW	Max. current draw (1) A	Capacitor µF/VDB	Min. back pressure Pa	Perm. amb. temp. °C	Electr. connection p. 596 f.
R4D 400 (2)	M4D 138-NA	Ⓐ	3~ 230/400	50	1210	4.92	14.70/8.50	—	550 (3)	-25 to +35	D1)/D2)

subject to alterations (1) Nominal data in operating point with maximum load (2) 230 VAC Δ / 400 VAC Y (3) without voltage control

Curves

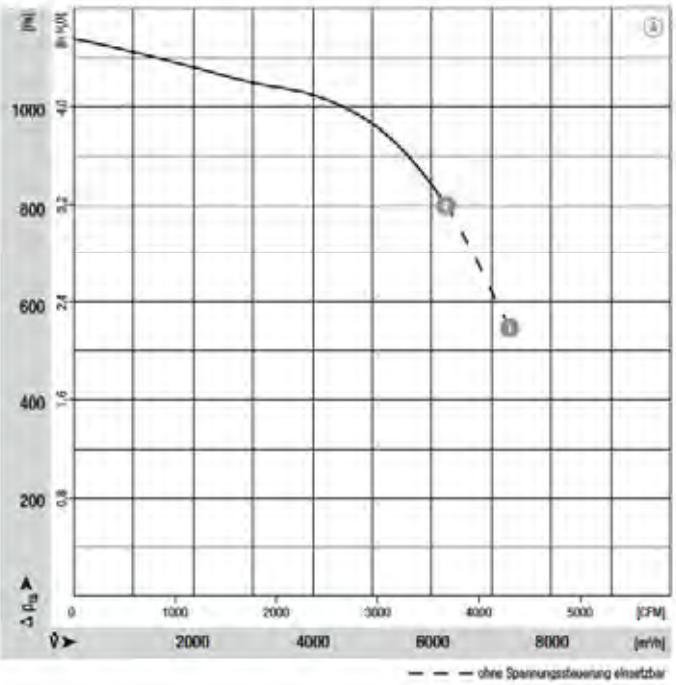

	n [rpm]	P_1 [kW]	I [A]	Lp_A [dB(A)]
Ⓐ a	1210	4.92	14.70/8.50	87
Ⓐ b	1300	3.70	11.19/6.46	86

ebmpapst

- **Motor protection:** Design with thermal overload protector
- **Cable exit:** Lateral
- **Protection class:** I (acc. to EN 61800-5-1)
- **Product conforming to standard:** CE
- **Approvals:** VDE (acc. to EN 60034)

Centrifugal fan	Mass of centrifugal fan kg	Inlet nozzle	Flange
R4D 400-C001 -01	32.5	40010-2-4013	38400-2-4017

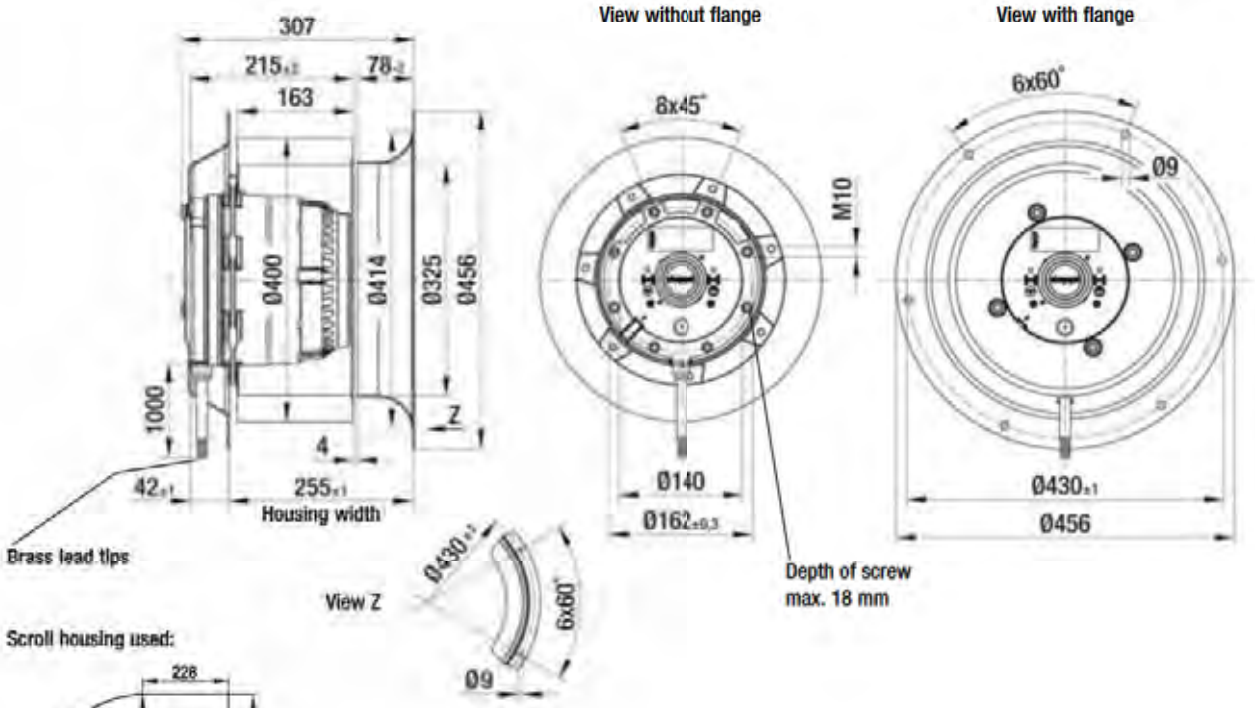

Scroll housing used:

AC centrifugal fans

single inlet, Ø 400

- **Material:** Impeller: Galvanised sheet steel
  Rotor: Cast in aluminium
- **Direction of rotation:** Clockwise, seen on rotor
- **Type of protection:** Ⓐ IP 20, Ⓑ IP 54 (acc. to EN 60529)
- **Insulation class:** "F"
- **Mounting position:** Any
- **Condensate discharge holes:** Ⓐ none, Ⓑ on rotor and stator sides
- **Mode of operation:** Continuous operation (S1)
- **Bearings:** Maintenance-free ball bearings

Nominal data		Curve	Nominal voltage	Frequency	Speed/rpm (1)	Max. power input (1)	Max. current draw (1)	Capacitor	Min. back pressure	Perm. amb. temp.	Electr. connection
Type	**Motor**		**VAC**	**Hz**	**rpm**	**kW**	**A**	**µF/VDB**	**Pa**	**°C**	p. 596 f.
R6D 400 (2)	M6D 138-LA	Ⓐ	3~ 230/400	50	840	240	8.47/4.90	—	0	-25 to +75	D1)/D2)
R8D 400 (2)	M8D 138-HF	Ⓑ	3~ 230/400	50	615	089	3.46/2.00	—	100	-25 to +65	D1)/D2)

subject to alterations (1) Nominal data in operating point with maximum load (2) 230 VAC Δ / 400 VAC Y

Curves

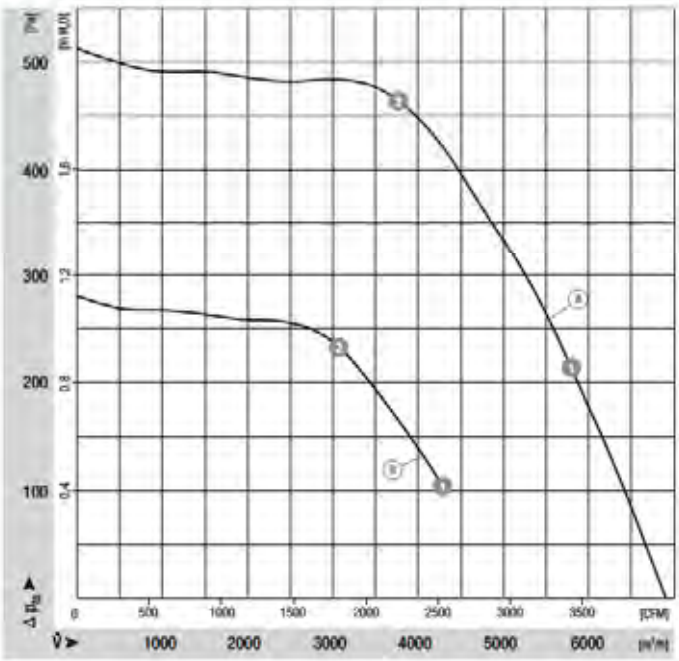

		n [rpm]	P_1 [kW]	I [A]	Lp_A [dB(A)]
Ⓐ	❶	890	1.86	7.10/4.10	80
Ⓐ	❷	940	1.16	5.51/3.18	74
Ⓑ	❶	615	0.89	3.46/2.00	71
Ⓑ	❷	675	0.60	2.74/1.58	67

ebmpapst

- **Motor protection:** Design with thermal overload protector
- **Cable exit:** Lateral
- **Protection class:** I (acc. to EN 61800-5-1)
- **Product conforming to standard:** CE
- **Approvals:** VDE (acc. to EN 60034)

Centrifugal fan	Mass of centrifugal fan kg	Inlet nozzle	Flange
R6D 400-CM05 -01	29.0	40010-2-4013	38400-2-4017
R8D 400-CK05 -01	26.0	40010-2-4013	38400-2-4017

View without flange

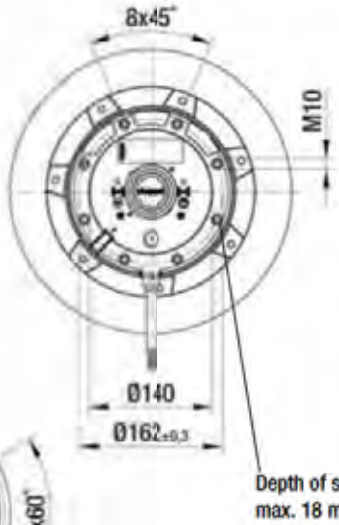

View with flange

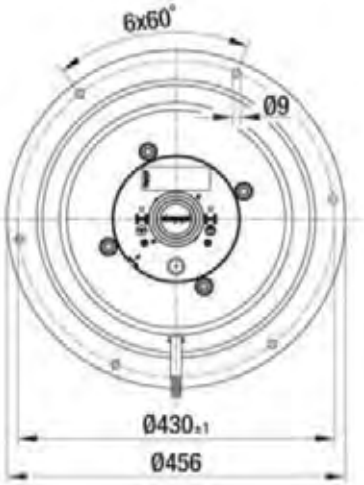

View Z

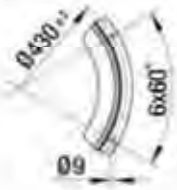

Scroll housing used: