# AC axial fans

## S series, Ø 200

- **Material:** Guard grille: Steel, phosphated and coated in black plastic
  Wall ring: Sheet steel, pre-galvanised and coated in black plastic
  Blades: Sheet steel, coated in black
  Rotor: Coated in black
- **Number of blades:** 9
- **Direction of rotation:** Counter-clockwise, seen on rotor
- **Type of protection:** IP 44
- **Insulation class:** "B"
- **Mounting position:** Shaft horizontal or rotor on bottom; rotor on top on request
- **Condensate discharges:** Rotor-side
- **Mode of operation:** Continuous operation (S1)
- **Bearings:** Maintenance-free ball bearings

| Nominal data | | Curve | Nominal voltage | Frequency | Air flow | Speed/rpm | Power input | Current draw | Capacitor | Sound pressure level | Max. operative range | Perm. amb. temp. | Mass without attachments | Electr. connection |
|---|---|---|---|---|---|---|---|---|---|---|---|---|---|---|
| **Type** | **Motor** | | **VAC** | **Hz** | **m³/h** | **rpm** | **W** | **A** | **µF/VDB** | **dB(A)** | **Pa** | **°C** | **kg** | **p. 416 f.** |
| ***2D 200** (1) | M2D 068-BF | Ⓐ | 3~ 230/400<br>3~ 230/400 | 50<br>60 | 890<br>990 | 2600<br>2900 | 68<br>70 | 0.29/0.17<br>0.23/0.13 | —<br>— | 65<br>68 | 140<br>140 | -25 to +45<br>-25 to +70 | 1.6 | C1)/C2) |
| ***2E 200** | M2E 068-BF | Ⓑ | 1~ 230<br>1~ 230 | 50<br>60 | 890<br>990 | 2600<br>2900 | 64<br>78 | 0.30<br>0.34 | 1.5/400<br>1.5/400 | 65<br>68 | 150<br>150 | -25 to +70<br>-25 to +70 | 1.4 | A1) |
| ***4D 200** (1) | M4D 068-BF | Ⓒ | 3~ 230/400<br>3~ 230/400 | 50<br>60 | 500<br>600 | 1440<br>1690 | 20<br>20 | 0.12/0.07<br>0.10/0.06 | —<br>— | 43<br>47 | 70<br>90 | -25 to +80<br>-25 to +90 | 1.4 | C1)/C2) |
| ***4S 200** | M4S 068-BF | Ⓓ | 1~ 230<br>1~ 230 | 50<br>60 | 470<br>540 | 1370<br>1580 | 30<br>27 | 0.21<br>0.19 | —<br>— | 42<br>46 | 50<br>50 | -25 to +75<br>-25 to +80 | 1.2 | B) |

subject to alterations

(1) 230 VAC Δ / 400 VAC Y

## Curves

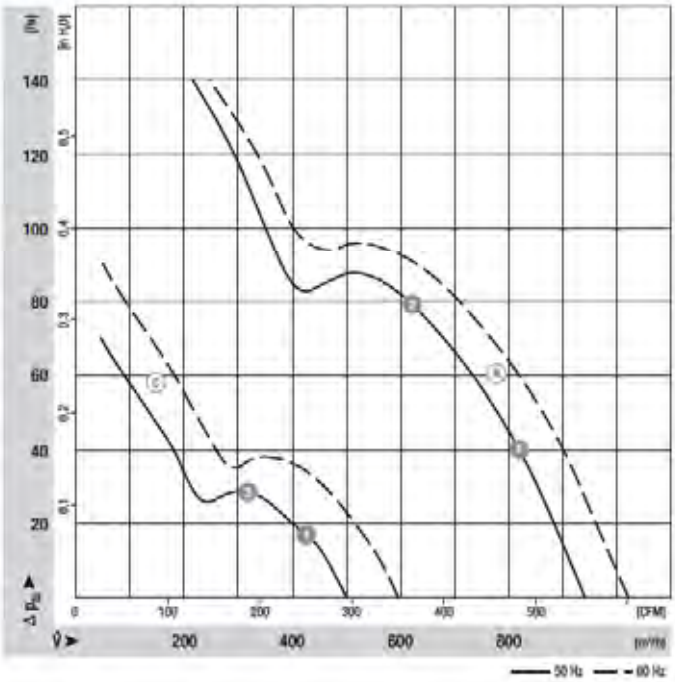


| | n [rpm] | $P_1$ [W] | I [A] |
|---|---|---|---|
| Ⓐ ❶ | 2540 | 70 | 0.29/0.17 |
| Ⓐ ❷ | 2470 | 74 | 0.29/0.17 |
| Ⓒ ❶ | 1430 | 21 | 0.12/0.07 |
| Ⓒ ❷ | 1420 | 23 | 0.12/0.07 |



ebmpapst

- **Motor protection:** Ⓐ Ⓒ Without TOP, Ⓑ Ⓓ TOP wired internally
- **Cable exit:** Ⓐ Ⓑ Lateral, Ⓒ Ⓓ variable
- **Protection class:** I
- **Product conforming to standards:** EN 60335-1, Ⓒ Ⓓ also CE
- **Approvals:** Ⓔ CCC

| Direction of air flow | < "V"/"A" > Without attachments | < "V"/"A" > With full round nozzle (1) | < "V"/"A" > With guard grille for full nozzle | < "V"/"A" > With guard grille for short nozzle |
|---|---|---|---|---|
| "V" | A2D 200-AH18 -01 | W2D 200-CH18 -01 | S2D 200-BH18 -01 | S2D 200-AH18 -01 |
| "A" | A2D 200-AI18 -01 | W2D 200-CI18 -01 | S2D 200-BI18 -01 | S2D 200-AI18 -01 |
| "V" | A2E 200-AH38 -01 | W2E 200-CH38 -01 | S2E 200-BH38 -01 | S2E 200-AH38 -01 |
| "A" | A2E 200-AI38 -01 | W2E 200-CI38 -01 | S2E 200-BI38 -01 | S2E 200-AI38 -01 |
| "V" | A4D 200-AH14 -01 | W4D 200-CH14 -01 | S4D 200-BH14 -01 | S4D 200-AH14 -01 |
| "A" | A4D 200-AI14 -01 | W4D 200-CI14 -01 | S4D 200-BI14 -01 | S4D 200-AI14 -01 |
| "V" | A4S 200-AH04 -01 | W4S 200-CH04 -01 | S4S 200-BH04 -01 | S4S 200-AH04 -01 |
| "A" | A4S 200-AI04 -01 | W4S 200-CI04 -01 | S4S 200-BI04 -01 | S4S 200-AI04 -01 |

(1) Increased noise levels in "V" direction of air flow

## Curves

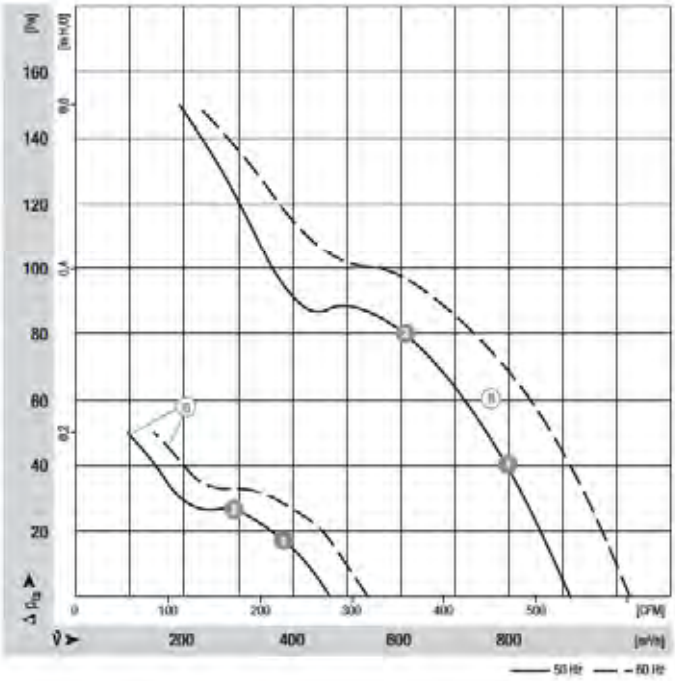


| | n [rpm] | $P_1$ [W] | I [A] |
|---|---|---|---|
| Ⓐ ❶ | 2555 | 67 | 0.31 |
| Ⓑ ❷ | 2465 | 70 | 0.32 |
| Ⓒ ❹ | 1360 | 31 | 0.22 |
| Ⓓ ❻ | 1350 | 31 | 0.22 |

# AC axial fans

S series, Ø 200, drawings of directions of air flow "V" and "A"

## Without attachments

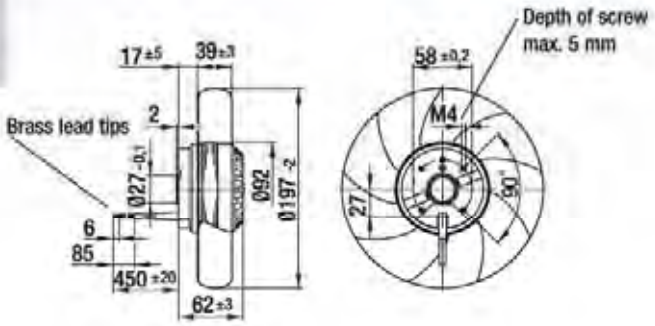


< "V"
"A" >

| Type | |
|---|---|
| A2D 200-AH18 -01 | "V" |
| A2D 200-AI18 -01 | "A" |
| A2E 200-AH38 -01 | "V" |
| A2E 200-AI38 -01 | "A" |
| A4D 200-AH14 -01 | "V" |
| A4D 200-AI14 -01 | "A" |
| A4S 200-AH04 -01 | "V" |
| A4S 200-AI04 -01 | "A" |

## With full round nozzle

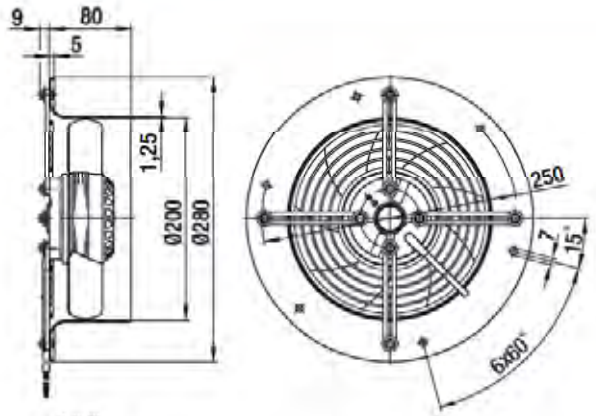


< "V"
"A" >

| Type | |
|---|---|
| W2D 200-CH18 -01 | "V" |
| W2D 200-CI18 -01 | "A" |
| W2E 200-CH38 -01 | "V" |
| W2E 200-CI38 -01 | "A" |
| W4D 200-CH14 -01 | "V" |
| W4D 200-CI14 -01 | "A" |
| W4S 200-CH04 -01 | "V" |
| W4S 200-CI04 -01 | "A" |

## With guard grille for full nozzle

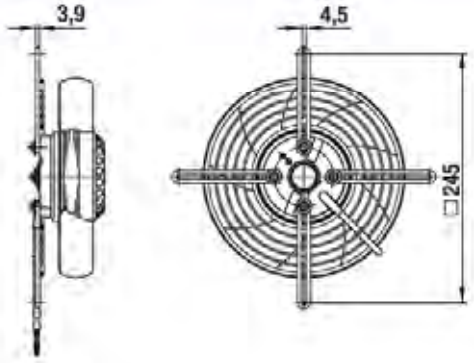


< "V"
"A" >

| Type | |
|---|---|
| S2D 200-BH18 -01 | "V" |
| S2D 200-BI18 -01 | "A" |
| S2E 200-BH38 -01 | "V" |
| S2E 200-BI38 -01 | "A" |
| S4D 200-BH14 -01 | "V" |
| S4D 200-BI14 -01 | "A" |
| S4S 200-BH04 -01 | "V" |
| S4S 200-BI04 -01 | "A" |

## With guard grille for short nozzle

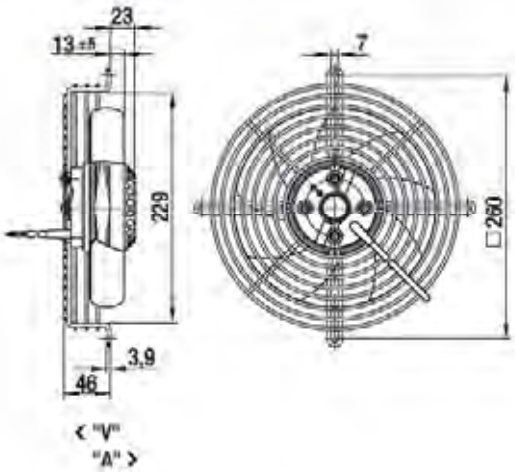


| Type | |
|---|---|
| S2D 200-AH18 -01 | "V" |
| S2D 200-AI18 -01 | "A" |
| S2E 200-AH38 -01 | "V" |
| S2E 200-AI38 -01 | "A" |
| S4D 200-AH14 -01 | "V" |
| S4D 200-AI14 -01 | "A" |
| S4S 200-AH04 -01 | "V" |
| S4S 200-AI04 -01 | "A" |

# AC axial fans

## S series, Ø 250

- **Material:** Guard grille: Steel, phosphated and coated in black plastic
  Wall ring: Sheet steel, pre-galvanised and coated in black plastic
  Blades: Sheet steel, coated in black
  Rotor: Coated in black
- **Number of blades:** 7
- **Direction of rotation:** Counter-clockwise, seen on rotor
- **Type of protection:** IP 44
- **Insulation class:** "B"
- **Mounting position:** Shaft horizontal or rotor on bottom; rotor on top on request
- **Condensate discharges:** Rotor-side
- **Mode of operation:** Continuous operation (S1)
- **Bearings:** Maintenance-free ball bearings

| Nominal data | | Curve | Nominal voltage | Frequency | Air flow | Speed/rpm | Power input | Current draw | Capacitor | Sound pressure level | Max. operative range | Perm. amb. temp. | Mass without attachments | Electr. connection |
|---|---|---|---|---|---|---|---|---|---|---|---|---|---|---|
| Type | Motor | | VAC | Hz | m³/h | rpm | W | A | µF/VDB | dB(A) | Pa | °C | kg | p. 416 f. |
| *2D 250 (1) | M2D 068-CF | Ⓐ | 3~ 230/400<br>3~ 230/400 | 50<br>60 | 1830<br>1950 | 2500<br>2650 | 100<br>140 | 0.34/0.20<br>0.40/0.23 | —<br>— | 69<br>70 | 150<br>150 | -25 to +65<br>-25 to +45 | 2.1 | C1)/C2) |
| *2E 250 | M2E 068-CF | Ⓑ | 1~ 230<br>1~ 230 | 50<br>60 | 1820<br>1970 | 2450<br>2600 | 115<br>150 | 0.51<br>0.66 | 3.0/400<br>3.0/400 | 69<br>71 | 120<br>85 | -25 to +65<br>-25 to +50 | 1.9 | A1) |
| *4D 250 (1) | M4D 068-CF | Ⓒ | 3~ 230/400<br>3~ 230/400 | 50<br>60 | 1010<br>1140 | 1400<br>1580 | 25<br>32 | 0.12/0.07<br>0.12/0.07 | —<br>— | 54<br>57 | 70<br>70 | -25 to +85<br>-25 to +80 | 1.9 | C1)/C2) |
| *4E 250 | M4E 068-BF | Ⓓ | 1~ 230<br>1~ 230 | 50<br>60 | 1010<br>1200 | 1400<br>1630 | 42<br>45 | 0.19<br>0.20 | 1.5/400<br>1.5/400 | 54<br>58 | 80<br>100 | -25 to +55<br>-25 to +70 | 1.9 | A1) |
| *4S 250 | M4S 068-CF | Ⓔ | 1~ 230<br>1~ 230 | 50<br>60 | 1000<br>1160 | 1390<br>1600 | 69<br>63 | 0.53<br>0.45 | —<br>— | 54<br>58 | 80<br>80 | -25 to +50<br>-25 to +65 | 1.7 | B) |

subject to alterations

(1) 230 VAC Δ / 400 VAC Y

## Curves

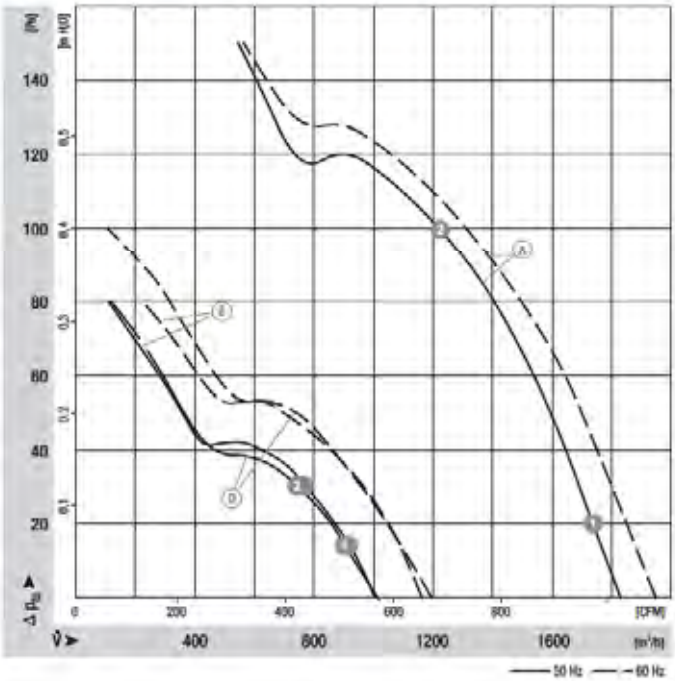


| | n [rpm] | $P_1$ [W] | I [A] |
|---|---|---|---|
| Ⓐ ❶ | 2455 | 106 | 0.34/0.20 |
| Ⓐ ❷ | 2310 | 125 | 0.38/0.22 |
| Ⓑ ❶ | 1370 | 43 | 0.20 |
| Ⓑ ❷ | 1360 | 45 | 0.20 |
| Ⓔ ❶ | 1370 | 71 | 0.53 |
| Ⓔ ❷ | 1360 | 73 | 0.53 |



ebmpapst

- **Motor protection:** Ⓐ Ⓒ Without TOP, Ⓑ Ⓓ Ⓕ TOP wired internally
- **Cable exit:** Ⓐ Ⓒ Ⓕ Lateral, Ⓑ Ⓓ variable
- **Protection class:** I
- **Product conforming to standards:** EN 60335-1, Ⓑ Ⓒ Ⓓ also CE
- **Approvals:** Ⓐ Ⓒ Ⓓ CCC; Ⓑ also GOST

| Direction of air flow | ❮ "V" / "A" ❯ Without attachments | ❮ "V" / "A" ❯ With full round nozzle (1) | ❮ "V" / "A" ❯ With guard grille for full nozzle | ❮ "V" / "A" ❯ With guard grille for short nozzle |
|---|---|---|---|---|
| "V" | A2D 250-AH02 -01 | W2D 250-CH02 -01 | S2D 250-BH02 -01 | S2D 250-AH02 -01 |
| "A" | A2D 250-AI02 -01 | W2D 250-CI02 -01 | S2D 250-BI02 -01 | S2D 250-AI02 -01 |
| "V" | A2E 250-AL06 -01 | W2E 250-CL06 -01 | S2E 250-BL06 -01 | S2E 250-AL06 -01 |
| "A" | A2E 250-AM06 -01 | W2E 250-CM06 -01 | S2E 250-BM06 -01 | S2E 250-AM06 -01 |
| "V" | A4D 250-AH22 -01 | W4D 250-CH22 -01 | S4D 250-BH22 -01 | S4D 250-AH22 -01 |
| "A" | A4D 250-AI22 -01 | W4D 250-CI22 -01 | S4D 250-BI22 -01 | S4D 250-AI22 -01 |
| "V" | A4E 250-AH02 -01 | W4E 250-CH02 -01 | S4E 250-BH02 -01 | S4E 250-AH02 -01 |
| "A" | A4E 250-AI02 -01 | W4E 250-CI02 -01 | S4E 250-BI02 -01 | S4E 250-AI02 -01 |
| "V" | A4S 250-AH02 -01 | W4S 250-CH02 -01 | S4S 250-BH02 -01 | S4S 250-AH02 -01 |
| "A" | A4S 250-AI02 -01 | W4S 250-CI02 -01 | S4S 250-BI02 -01 | S4S 250-AI02 -01 |

(1) Increased noise levels in "V" direction of air flow

## Curves

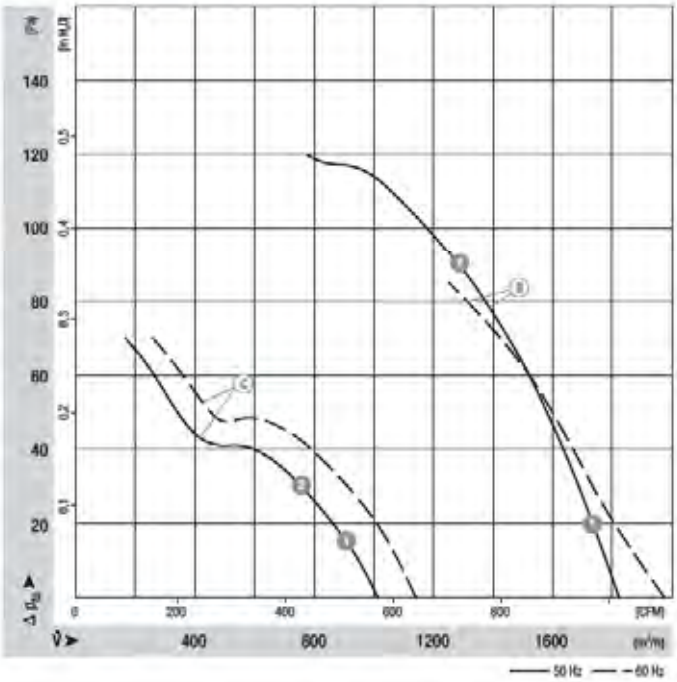


| | n [rpm] | $P_1$ [W] | I [A] |
|---|---|---|---|
| Ⓐ ❶ | 2455 | 116 | 0,51 |
| Ⓑ ❷ | 2290 | 132 | 0,57 |
| Ⓒ ❶ | 1375 | 27 | 0.12/0.07 |
| Ⓒ ❷ | 1350 | 30 | 0.12/0.07 |

# AC axial fans

S series, Ø 250, drawings of directions of air flow "V" and "A"

## Without attachments

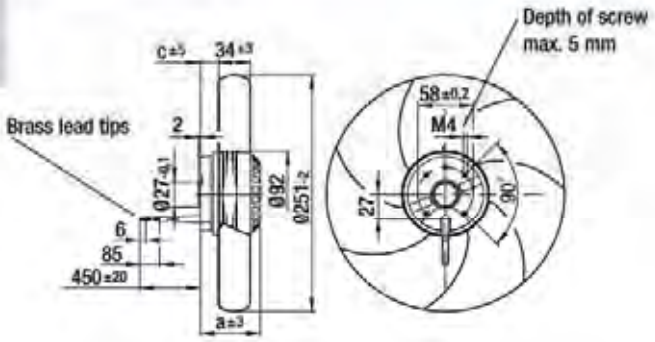


| Type | | a | c |
|---|---|---|---|
| A2D 250-AH02 -01 | "V" | 72.0 | 18.0 |
| A2D 250-AI02 -01 | "A" | 72.0 | 21.0 |
| A2E 250-AL06 -01 | "V" | 72.0 | 18.0 |
| A2E 250-AM06 -01 | "A" | 72.0 | 27.0 |
| A4D 250-AH22 -01 | "V" | 72.0 | 18.0 |
| A4D 250-AI22 -01 | "A" | 72.0 | 27.0 |
| A4E 250-AH02 -01 | "V" | 62.0 | 14.0 |
| A4E 250-AI02 -01 | "A" | 62.0 | 22.0 |
| A4S 250-AH02 -01 | "V" | 72.0 | 18.0 |
| A4S 250-AI02 -01 | "A" | 72.0 | 23.0 |

## With full round nozzle

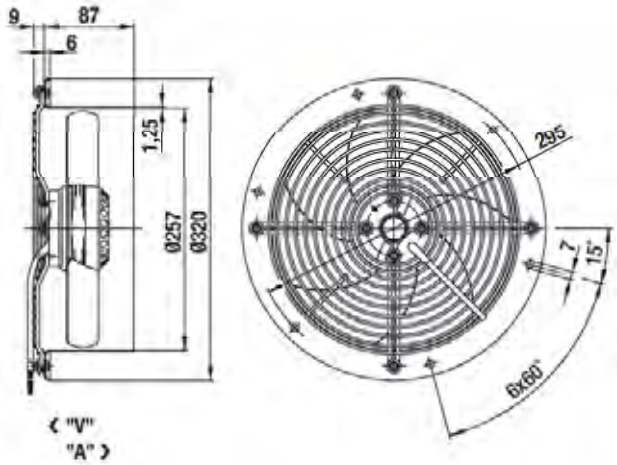


| Type | |
|---|---|
| W2D 250-CH02 -01 | "V" |
| W2D 250-CI02 -01 | "A" |
| W2E 250-CL06 -01 | "V" |
| W2E 250-CM06 -01 | "A" |
| W4D 250-CH22 -01 | "V" |
| W4D 250-CI22 -01 | "A" |
| W4E 250-CH02 -01 | "V" |
| W4E 250-CI02 -01 | "A" |
| W4S 250-CH02 -01 | "V" |
| W4S 250-CI02 -01 | "A" |

## With guard grille for full nozzle

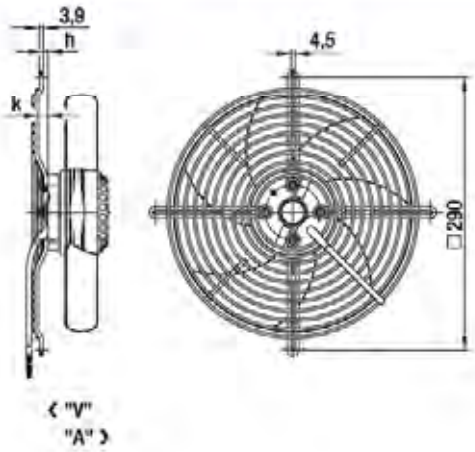


| Type | | h | k |
|---|---|---|---|
| S2D 250-BH02 -01 | "V" | 5.0 | 10.0 |
| S2D 250-BI02 -01 | "A" | 0 | 0 |
| S2E 250-BL06 -01 | "V" | 5.0 | 10.0 |
| S2E 250-BM06 -01 | "A" | 0 | 0 |
| S4D 250-BH22 -01 | "V" | 5.0 | 10.0 |
| S4D 250-BI22 -01 | "A" | 0 | 0 |
| S4E 250-BH02 -01 | "V" | 5.0 | 10.0 |
| S4E 250-BI02 -01 | "A" | 0 | 0 |
| S4S 250-BH02 -01 | "V" | 5.0 | 10.0 |
| S4S 250-BI02 -01 | "A" | 0 | 0 |

## With guard grille for short nozzle

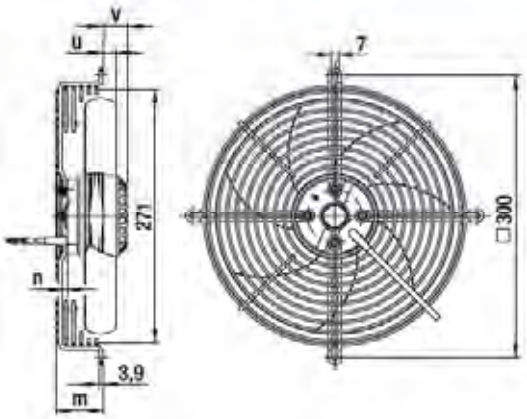


< "V"
"A" >

| Type | | m | n | u | v |
|---|---|---|---|---|---|
| S2D 250-AH02 -01 | "V" | 50.0 | 5.0 | 14.0 | 34.0 |
| S2D 250-AI02 -01 | "A" | 45.0 | 0 | 17.0 | 34.0 |
| S2E 250-AL06 -01 | "V" | 50.0 | 5.0 | 14.0 | 34.0 |
| S2E 250-AM06 -01 | "A" | 45.0 | 0 | 23.0 | 34.0 |
| S4D 250-AH22 -01 | "V" | 50.0 | 5.0 | 14.0 | 34.0 |
| S4D 250-AI22 -01 | "A" | 45.0 | 0 | 23.0 | 34.0 |
| S4E 250-AH02 -01 | "V" | 50.0 | 5.0 | 10.0 | 24.0 |
| S4E 250-AI02 -01 | "A" | 45.0 | 0 | 18.0 | 24.0 |
| S4S 250-AH02 -01 | "V" | 50.0 | 5.0 | 14.0 | 34.0 |
| S4S 250-AI02 -01 | "A" | 45.0 | 0 | 19.0 | 34.0 |

# AC axial fans 2-pole

S series, Ø 300

- **Material:** Guard grille: Steel, phosphated and coated in black plastic
  Wall ring: Sheet steel, pre-galvanised and coated in black plastic
  Blades: Sheet steel, coated in black
  Rotor: Coated in black
- **Number of blades:** 5
- **Direction of rotation:** Direction of air flow "V" counter-clockwise, direction of air flow "A" counter-clockwise, seen on rotor
- **Type of protection:** IP 44
- **Insulation class:** "B"
- **Mounting position:** Shaft horizontal or rotor on bottom; rotor on top on request
- **Condensate discharges:** Rotor-side
- **Mode of operation:** Continuous operation (S1)
- **Bearings:** Maintenance-free ball bearings

| Nominal data | | Curve | Nominal voltage | Frequency | Air flow | Speed/rpm | Power input | Current draw | Capacitor | Sound pressure level | Max. operative range | Perm. amb. temp. | Mass without attachments | Electr. connection |
|---|---|---|---|---|---|---|---|---|---|---|---|---|---|---|
| Type | Motor | | VAC | Hz | m³/h | rpm | W | A | µF/VDB | dB(A) | Pa | °C | kg | p. 416 f. |
| *2D 300 (1) | M2D 074-DF | Ⓐ | 3~ 230/400<br>3~ 230/400 | 50<br>60 | 3130<br>3350 | 2580<br>2750 | 210<br>300 | 0.62/0.36<br>0.83/0.48 | —<br>— | 72<br>73 | 200<br>125 | -25 to +55<br>-25 to +40 | 3.0 | C1)/C2) |
| *2E 300 | M2E 074-DF | Ⓑ | 1~ 230<br>1~ 230 | 50<br>60 | 3410<br>3740 | 2700<br>3000 | 230<br>350 | 1.10<br>1.55 | 8.0/400<br>8.0/400 | 73<br>76 | 200<br>50 | -25 to +50<br>-25 to +40 | 3.0 | A1) |

subject to alterations

(1) 230 VAC Δ / 400 VAC Y

## Curves

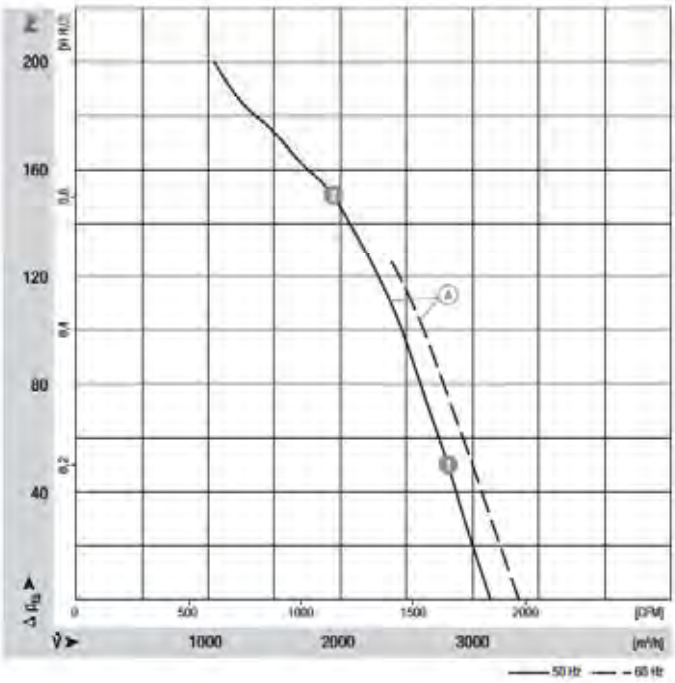


| | n [rpm] | $P_1$ [W] | I [A] |
|---|---|---|---|
| Ⓐ ❶ | 2530 | 228 | 0.68/0.39 |
| Ⓐ ❷ | 2400 | 273 | 0.78/0.45 |



ebmpapst

- **Motor protection:** Ⓑ Without TOP, Ⓒ TOP wired internally
- **Cable exit:** Variable
- **Protection class:** I
- **Product conforming to standards:** EN 60335-1, Ⓔ also CE
- **Approvals:** CCC

Direction of air flow

| | ❮"V"/"A"❯ Without attachments | ❮"V"/"A"❯ With full round nozzle | ❮"V"/"A"❯ With guard grille for full nozzle | ❮"V"/"A"❯ With guard grille for short nozzle |
|---|---|---|---|---|
| "V" | A2D 300-AP02 -01 | W2D 300-CP02 -30 | S2D 300-BP02 -30 | S2D 300-AP02 -30 |
| "A" | A2D 300-AP02 -02 | W2D 300-CP02 -31 | S2D 300-BP02 -31 | S2D 300-AP02 -31 |
| "V" | A2E 300-AP02 -01 | W2E 300-CP02 -30 | S2E 300-BP02 -30 | S2E 300-AP02 -30 |
| "A" | A2E 300-AP02 -02 | W2E 300-CP02 -31 | S2E 300-BP02 -31 | S2E 300-AP02 -31 |

## Curves

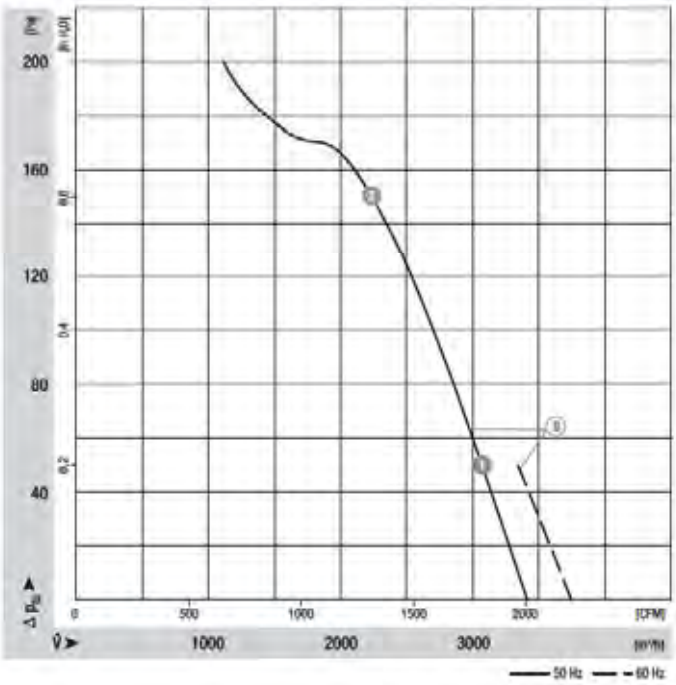


| | n [rpm] | $P_1$ [W] | I [A] |
|---|---|---|---|
| Ⓑ ❶ | 2680 | 252 | 1.11 |
| Ⓑ ❷ | 2560 | 290 | 1.27 |

# AC axial fans 2-pole

S series, Ø 300, drawings of directions of air flow "V" and "A"

## Without attachments

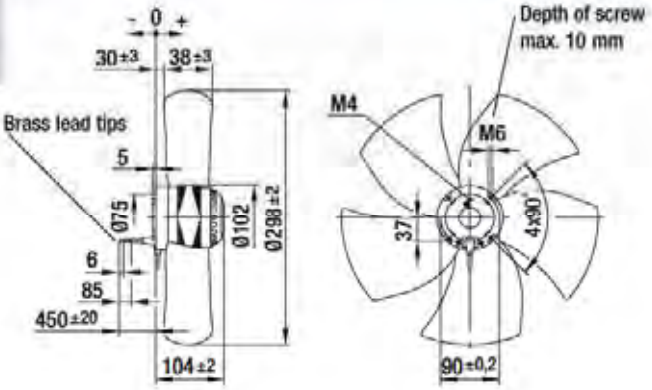


| Type | |
|---|---|
| A2D 300-AP02 -01 | "V" |
| A2D 300-AP02 -02 | "A" |
| A2E 300-AP02 -01 | "V" |
| A2E 300-AP02 -02 | "A" |

## With full round nozzle

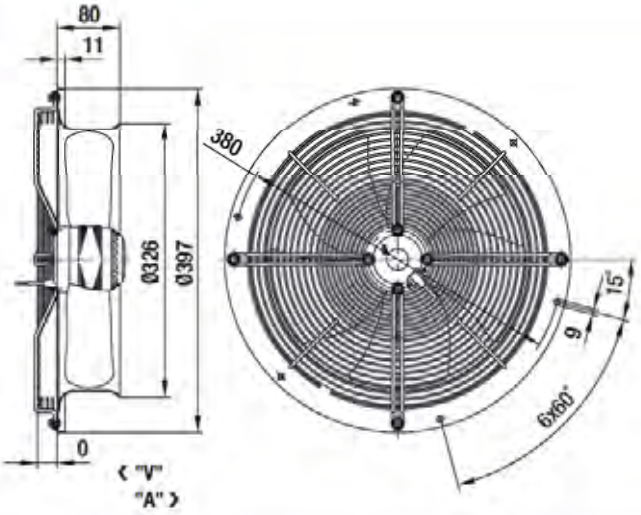


| Type | |
|---|---|
| W2D 300-CP02 -30 | "V" |
| W2D 300-CP02 -31 | "A" |
| W2E 300-CP02 -30 | "V" |
| W2E 300-CP02 -31 | "A" |

## With guard grille for full nozzle

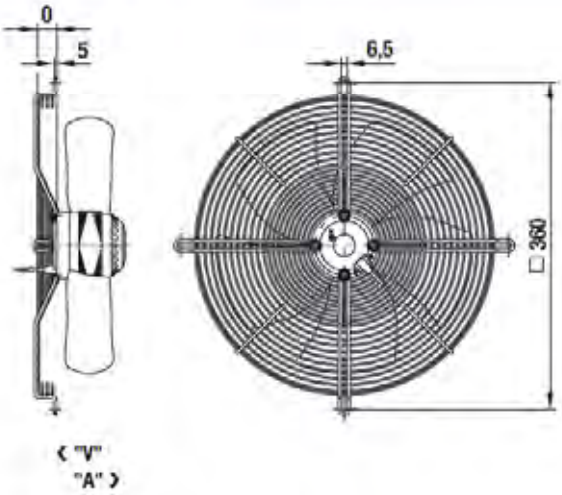


| Type | |
|---|---|
| S2D 300-BP02 -30 | "V" |
| S2D 300-BP02 -31 | "A" |
| S2E 300-BP02 -30 | "V" |
| S2E 300-BP02 -31 | "A" |

## With guard grille for short nozzle

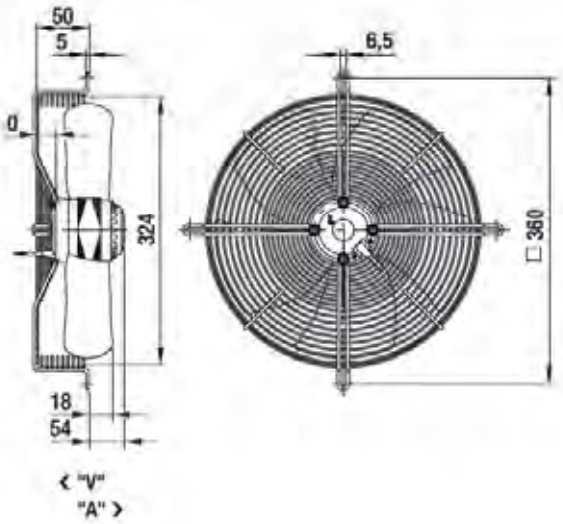


| Type | |
|---|---|
| S2D 300-AP02 -30 | "V" |
| S2D 300-AP02 -31 | "A" |
| S2E 300-AP02 -30 | "V" |
| S2E 300-AP02 -31 | "A" |

# AC axial fans 4-pole

S series, Ø 300

- **Material:** Guard grille: Steel, phosphated and coated in black plastic
  Wall ring: Sheet steel, pre-galvanised and coated in black plastic
  Blades: Sheet steel, coated in black
  Rotor: Coated in black
- **Number of blades:** 5
- **Direction of rotation:** Direction of air flow "V" counter-clockwise, direction of air flow "A" counter-clockwise, seen on rotor
- **Type of protection:** IP 44
- **Insulation class:** "B"
- **Mounting position:** Shaft horizontal or rotor on bottom; rotor on top on request
- **Condensate discharges:** Rotor-side
- **Mode of operation:** Continuous operation (S1)
- **Bearings:** Maintenance-free ball bearings

| Nominal data | | Curve | Nominal voltage | Frequency | Air flow | Speed/rpm | Power input | Current draw | Capacitor | Sound pressure level | Max. operative range | Perm. amb. temp. | Mass without attachments | Electr. connection |
|---|---|---|---|---|---|---|---|---|---|---|---|---|---|---|
| **Type** | **Motor** | | **VAC** | **Hz** | **m³/h** | **rpm** | **W** | **A** | **µF/VDB** | **dB(A)** | **Pa** | **°C** | **kg** | **p. 416 f.** |
| *4D 300 (1) | M4D 068-CF | Ⓐ | 3~ 230/400<br>3~ 230/400 | 50<br>60 | 1860<br>2080 | 1370<br>1540 | 60<br>75 | 0.29/0.17<br>0.26/0.15 | —<br>— | 57<br>60 | 90<br>60 | -25 to +45<br>-25 to +40 | 1.9 | C1)/C2) |
| *4E 300 | M4E 068-CF | Ⓑ | 1~ 230<br>1~ 230 | 50<br>60 | 1740<br>2040 | 1400<br>1630 | 68<br>92 | 0.30<br>0.41 | 2.0/400<br>2.0/400 | 59<br>63 | 80<br>70 | -25 to +60<br>-25 to +45 | 1.9 | A1) |

subject to alterations

(1) 230 VAC Δ / 400 VAC Y

## Curves

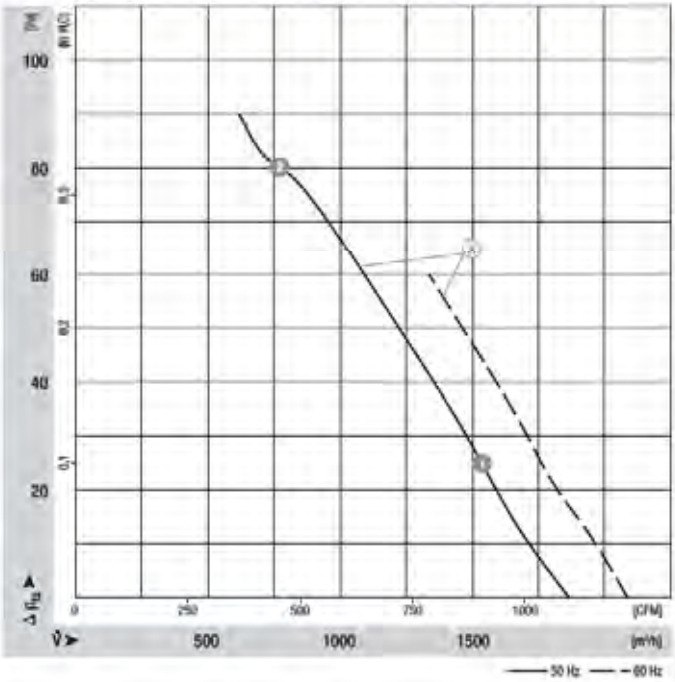


| | n [rpm] | $P_1$ [W] | I [A] |
|---|---|---|---|
| Ⓐ ❶ | 1350 | 68 | 0.29/0.17 |
| Ⓐ ❷ | 1260 | 88 | 0.33/0.19 |



ebmpapst

- **Motor protection:** Ⓐ Without TOP, Ⓑ TOP wired internally
- **Cable exit:** Ⓐ Axial, Ⓑ variable
- **Protection class:** I
- **Product conforming to standards:** EN 60335-1, Ⓐ also CE
- **Approvals:** CCC; Ⓐ also GOST

Direction of air flow

| | ❮ "V"/"A" ❯ Without attachments | ❮ "V"/"A" ❯ With full round nozzle | ❮ "V"/"A" ❯ With guard grille for full nozzle | ❮ "V"/"A" ❯ With guard grille for short nozzle |
|---|---|---|---|---|
| "V" | A4D 300-AP28 -01 | W4D 300-CP28 -30 | S4D 300-BP28 -30 | S4D 300-AP28 -30 |
| "A" | A4D 300-AP28 -02 | W4D 300-CP28 -31 | S4D 300-BP28 -31 | S4D 300-AP28 -31 |
| "V" | A4E 300-AP26 -01 | W4E 300-CP26 -30 | S4E 300-BP26 -30 | S4E 300-AP26 -30 |
| "A" | A4E 300-AP26 -02 | W4E 300-CP26 -31 | S4E 300-BP26 -31 | S4E 300-AP26 -31 |

## Curves

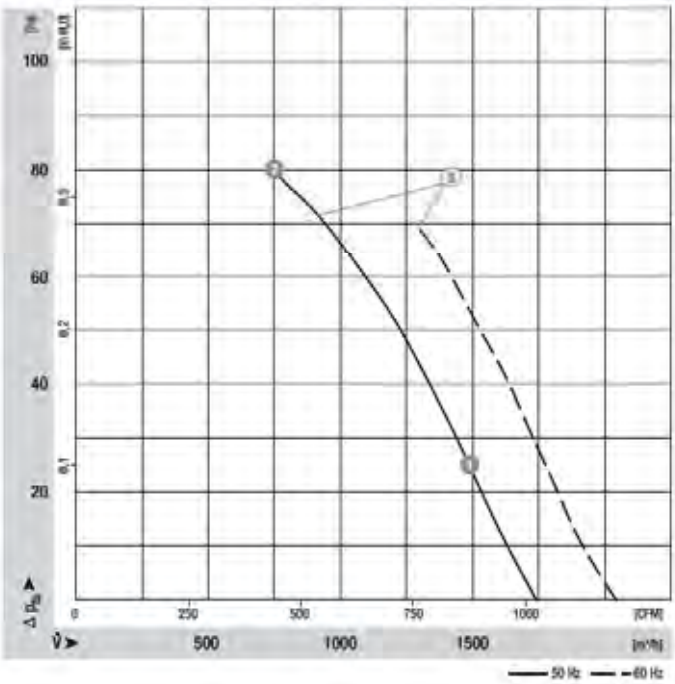


| | n [rpm] | $P_1$ [W] | I [A] |
|---|---|---|---|
| Ⓐ ❶ | 1390 | 72 | 0.32 |
| Ⓐ ❷ | 1290 | 88 | 0.39 |

# AC axial fans 4-pole

S series, Ø 300, drawings of directions of air flow "V" and "A"

## Without attachments

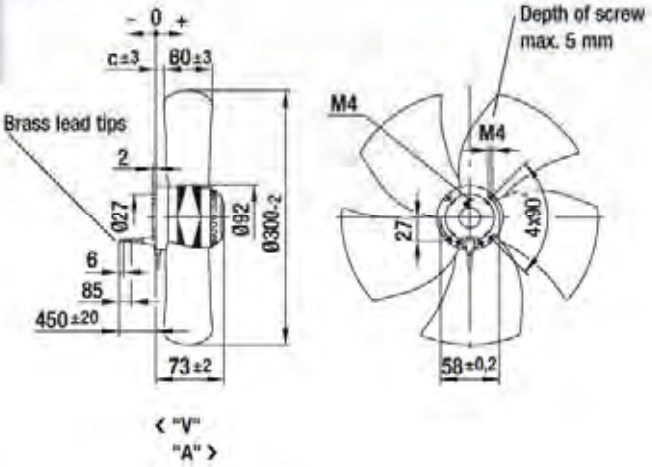


| Type | | c |
|---|---|---|
| A4D 300-AP28 -01 | "V" | 13.0 |
| A4D 300-AP28 -02 | "A" | -7.0 |
| A4E 300-AP26 -01 | "V" | 13.0 |
| A4E 300-AP26 -02 | "A" | -7.0 |

## With full round nozzle

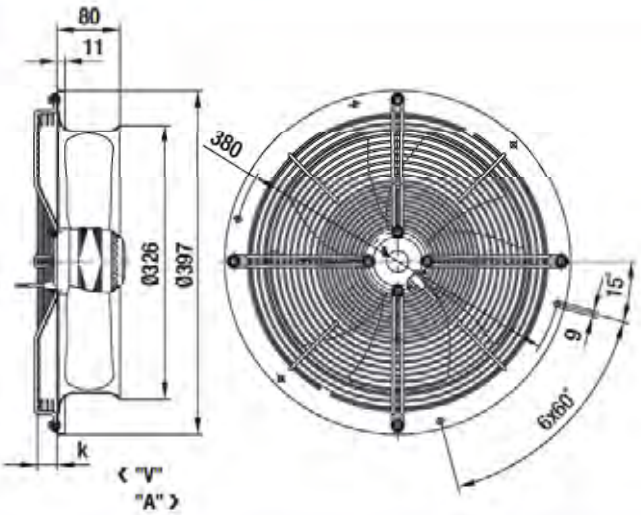


| Type | | k |
|---|---|---|
| W4D 300-CP28 -30 | "V" | 0.0 |
| W4D 300-CP28 -31 | "A" | 30.0 |
| W4E 300-CP26 -30 | "V" | 0.0 |
| W4E 300-CP26 -31 | "A" | 30.0 |

## With guard grille for full nozzle

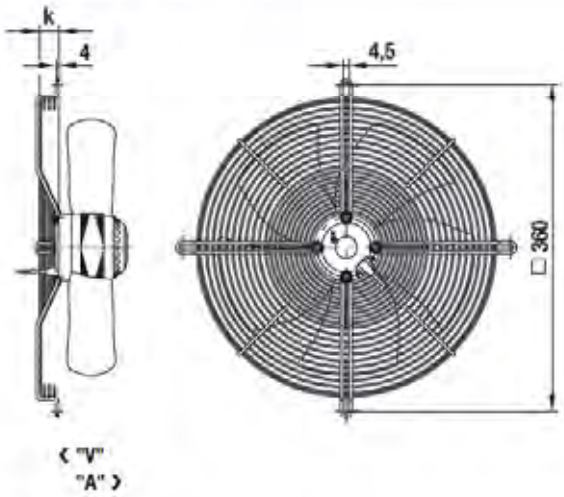


| Type | | k |
|---|---|---|
| S4D 300-BP28 -30 | "V" | 0.0 |
| S4D 300-BP28 -31 | "A" | 30.0 |
| S4E 300-BP26 -30 | "V" | 0.0 |
| S4E 300-BP26 -31 | "A" | 30.0 |

## With guard grille for short nozzle

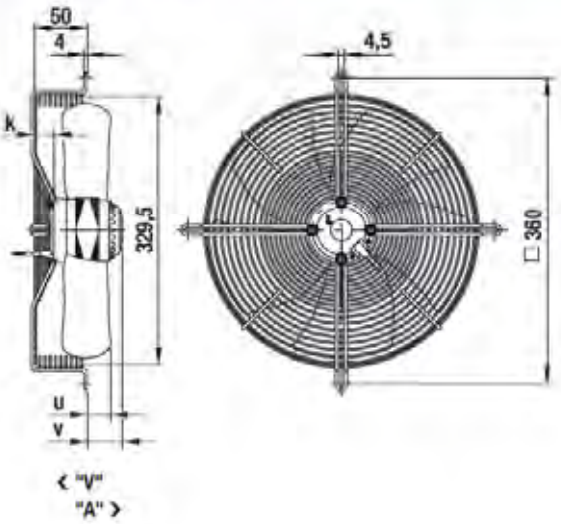


| Type | | k | u | v |
|---|---|---|---|---|
| S4D 300-AP28 -30 | "V" | 0.0 | 23.0 | 23.0 |
| S4D 300-AP28 -31 | "A" | 30.0 | 29.0 | 49.0 |
| S4E 300-AP26 -30 | "V" | 0.0 | 23.0 | 23.0 |
| S4E 300-AP26 -31 | "A" | 30.0 | 29.0 | 49.0 |

# AC axial fans

S series, Ø 315

- **Material:** Guard grille: Steel, phosphated and coated in black plastic
  Wall ring: Sheet steel, pre-galvanised and coated in black plastic
  Blades: Sheet steel, coated in black
  Rotor: Coated in black
- **Number of blades:** 5
- **Direction of rotation:** Direction of air flow "V" counter-clockwise, direction of air flow "A" counter-clockwise, seen on rotor
- **Type of protection:** IP 44
- **Insulation class:** "B"
- **Mounting position:** Shaft horizontal or rotor on bottom; rotor on top on request
- **Condensate discharges:** Rotor-side
- **Mode of operation:** Continuous operation (S1)
- **Bearings:** Maintenance-free ball bearings

| Nominal data | | Curve | Nominal voltage | Frequency | Air flow | Speed/rpm | Power input | Current draw | Capacitor | Sound pressure level | Max. operative range | Perm. amb. temp. | Mass without attachments | Electr. connection |
|---|---|---|---|---|---|---|---|---|---|---|---|---|---|---|
| **Type** | **Motor** | | **VAC** | **Hz** | **m³/h** | **rpm** | **W** | **A** | **µF/VDB** | **dB(A)** | **Pa** | **°C** | **kg** | **p. 416 f.** |
| ***4D 315** (1) | M4D 068-DF | Ⓐ | 3~ 230/400<br>3~ 230/400 | 50<br>60 | 2450<br>2810 | 1400<br>1620 | 85<br>110 | 0.45/0.26<br>0.42/0.24 | —<br>— | 60<br>64 | 120<br>120 | -25 to +55<br>-25 to +55 | 2.4 | C1)/C2) |
| ***4E 315** | M4E 068-DF | Ⓑ | 1~ 230<br>1~ 230 | 50<br>60 | 2440<br>2840 | 1410<br>1650 | 102<br>120 | 0.52<br>0.53 | 4.0/400<br>4.0/400 | 59<br>64 | 120<br>120 | -25 to +55<br>-25 to +55 | 2.4 | A1) |
| ***6E 315** | M6E 068-DF | Ⓒ | 1~ 230<br>1~ 230 | 50<br>60 | 1650<br>1950 | 950<br>1120 | 65<br>68 | 0.33<br>0.30 | 2.0/400<br>2.0/450 | 51<br>55 | 70<br>80 | -25 to +50<br>-25 to +60 | 2.4 | A1) |

subject to alterations

(1) 230 VAC Δ / 400 VAC Y

## Curves

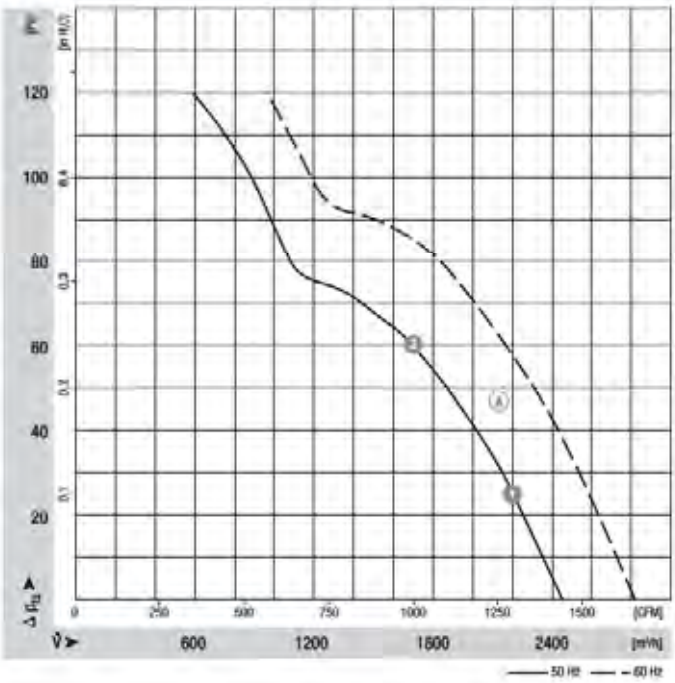


| | n [rpm] | $P_1$ [W] | I [A] |
|---|---|---|---|
| Ⓐ ❶ | 1400 | 90 | 0,45/0.26 |
| Ⓐ ❷ | 1380 | 103 | 0,47/0.27 |



Drawings
p. 42 f.

ebmpapst

- **Motor protection:** ⓐ Without TOP, ⓑ ⓒ TOP wired internally
- **Cable exit:** Axial
- **Protection class:** I
- **Product conforming to standards:** EN 60335-1, ⓑ ⓒ also CE
- **Approvals:** CCC; ⓐ also GOST

| Direction of air flow | ❮ "V"/"A" ❯ Without attachments | ❮ "V"/"A" ❯ With full round nozzle | ❮ "V"/"A" ❯ With guard grille for full nozzle | ❮ "V"/"A" ❯ With guard grille for short nozzle | ❮ "V" In-line duct fan |
|---|---|---|---|---|---|
| "V" | A4D 315-AP10 -01 | W4D 315-CP10 -30 | S4D 315-BP10 -30 | S4D 315-AP10 -30 | W4D 315-IP10 -01 |
| "A" | A4D 315-AP10 -02 | W4D 315-CP10 -31 | S4D 315-BP10 -31 | S4D 315-AP10 -31 | — |
| "V" | A4E 315-AP18 -01 | W4E 315-CP18 -30 | S4E 315-BP18 -30 | S4E 315-AP18 -30 | W4E 315-IP18 -01 |
| "A" | A4E 315-AP18 -02 | W4E 315-CP18 -31 | S4E 315-BP18 -31 | S4E 315-AP18 -31 | — |
| "V" | A6E 315-AP02 -01 | W6E 315-CP02 -30 | S6E 315-BP02 -30 | S6E 315-AP02 -30 | — |
| "A" | A6E 315-AP02 -02 | W6E 315-CP02 -31 | S6E 315-BP02 -31 | S6E 315-AP02 -31 | — |

## Curves

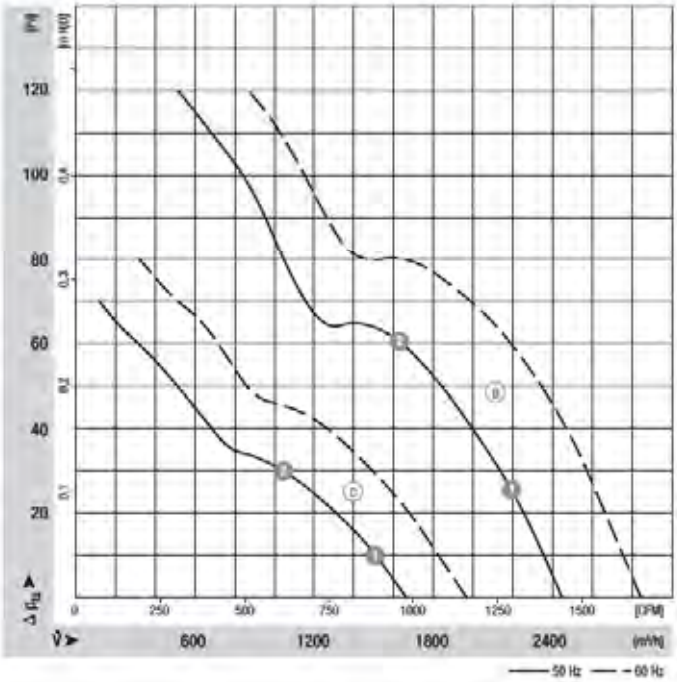


| | n [rpm] | $P_1$ [W] | I [A] |
|---|---|---|---|
| ⓐ ❶ | 1400 | 108 | 0.54 |
| ⓑ ❷ | 1380 | 120 | 0.57 |
| ⓒ ❸ | 945 | 63 | 0.33 |
| ⓓ ❹ | 930 | 66 | 0.33 |

# AC axial fans

S series, Ø 315, drawings of directions of air flow "V" and "A"

## Without attachments

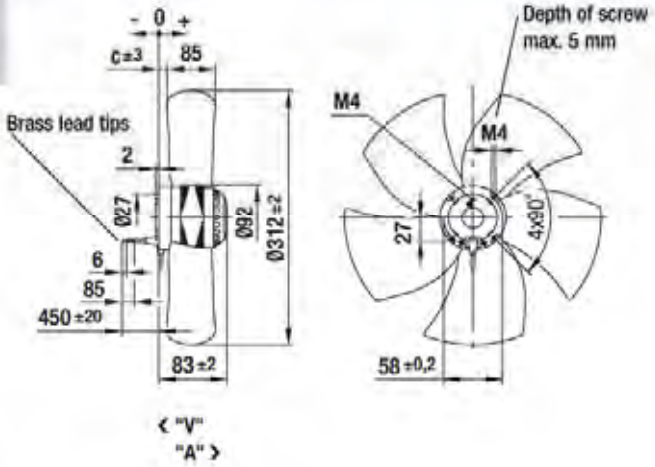


| Type | | c |
|---|---|---|
| A4D 315-AP10 -01 | "V" | 5.0 |
| A4D 315-AP10 -02 | "A" | -7.0 |
| A4E 315-AP18 -01 | "V" | 5.0 |
| A4E 315-AP18 -02 | "A" | -7.0 |
| A6E 315-AP02 -01 | "V" | 5.0 |
| A6E 315-AP02 -02 | "A" | -7.0 |

## With full round nozzle

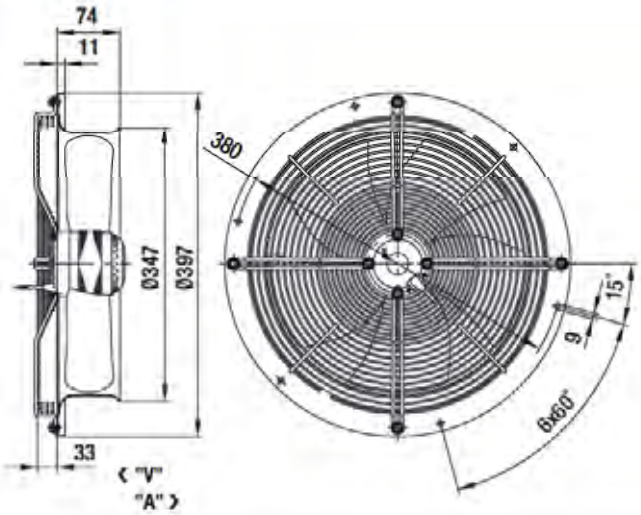


| Type | |
|---|---|
| W4D315-CP10 -30 | "V" |
| W4D315-CP10 -31 | "A" |
| W4E315-CP18 -30 | "V" |
| W4E315-CP18 -31 | "A" |
| W6E315-CP02 -30 | "V" |
| W6E315-CP02 -31 | "A" |

## With guard grille for full nozzle

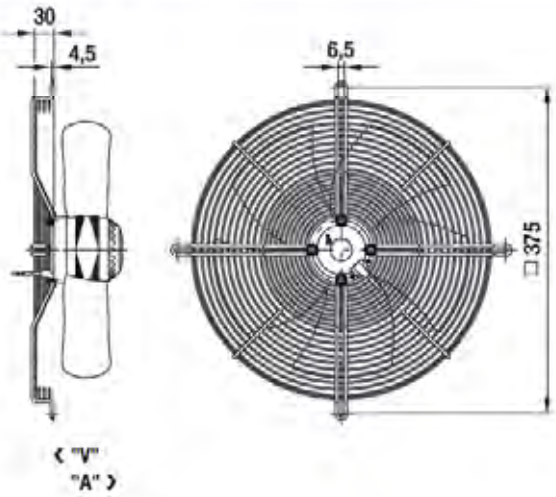


| Type | |
|---|---|
| S4D 315-BP10 -30 | "V" |
| S4D 315-BP10 -31 | "A" |
| S4E 315-BP18 -30 | "V" |
| S4E 315-BP18 -31 | "A" |
| S6E 315-BP02 -30 | "V" |
| S6E 315-BP02 -31 | "A" |

## With guard grille for short nozzle

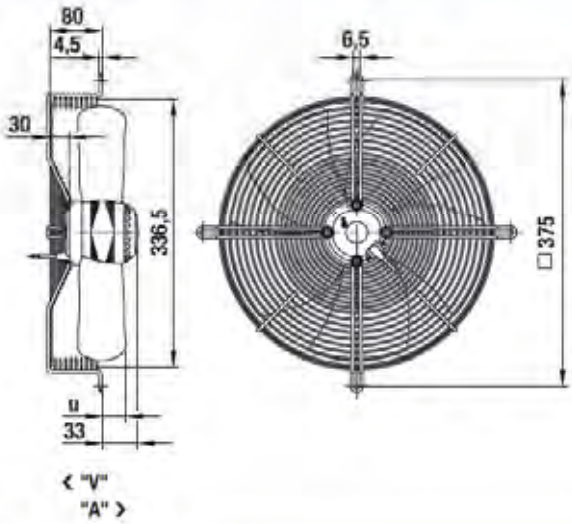


| Type | | u |
|---|---|---|
| S4D 315-AP10 -30 | "V" | 40.0 |
| S4D 315-AP10 -31 | "A" | 28.0 |
| S4E 315-AP18 -30 | "V" | 40.0 |
| S4E 315-AP18 -31 | "A" | 28.0 |
| S6E 315-AP02 -30 | "V" | 40.0 |
| S6E 315-AP02 -31 | "A" | 28.0 |

## In-line duct fan

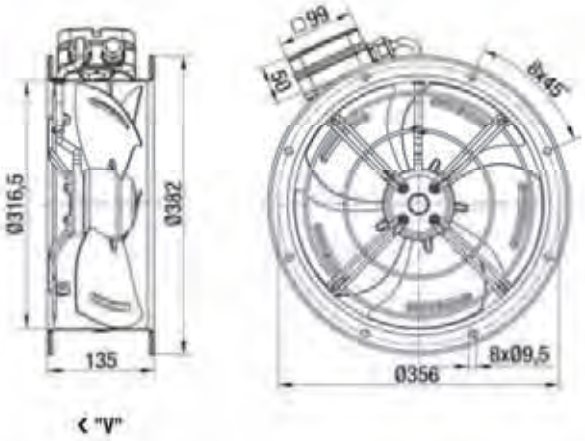


| Type | |
|---|---|
| W4D315-IP10 -01 | "V" |
| W4E315-IP18 -01 | "V" |

# AC axial fans

S series, Ø 330

- **Material:** Guard grille: Steel, phosphated and coated in black plastic
  Wall ring: Sheet steel, pre-galvanised and coated in black plastic
  Blades: Sheet steel, coated in black
  Rotor: Coated in black
- **Number of blades:** 5
- **Direction of rotation:** Direction of air flow "V" counter-clockwise, direction of air flow "A" counter-clockwise, seen on rotor
- **Type of protection:** IP 44
- **Insulation class:** "B"
- **Mounting position:** Shaft horizontal or rotor on bottom; rotor on top on request
- **Condensate discharges:** Rotor-side
- **Mode of operation:** Continuous operation (S1)
- **Bearings:** Maintenance-free ball bearings

| Nominal data | | Curve | Nominal voltage | Frequency | Air flow | Speed/rpm | Power input | Current draw | Capacitor | Sound pressure level | Max. operative range | Perm. amb. temp. | Mass without attachments | Electr. connection |
|---|---|---|---|---|---|---|---|---|---|---|---|---|---|---|
| Type | Motor | | VAC | Hz | m³/h | rpm | W | A | µF/VDB | dB(A) | Pa | °C | kg | p. 416 f. |
| *4D 330 (1) | M4D 068-DF | Ⓐ | 3~ 230/400<br>3~ 230/400 | 50<br>60 | 2800<br>3180 | 1390<br>1570 | 100<br>130 | 0.45/0.26<br>0.42/0.24 | —<br>— | 59<br>63 | 120<br>120 | -25 to +55<br>-25 to +45 | 2.6 | C1)/C2) |
| *4E 330 | M4E 068-DF | Ⓑ | 1~ 230<br>1~ 230 | 50<br>60 | 2830<br>3230 | 1390<br>1600 | 120<br>140 | 0.57<br>0.60 | 4.0/400<br>4.0/400 | 63<br>67 | 90<br>75 | -25 to +50<br>-25 to +40 | 2.5 | A1) |
| *6E 330 | M6E 068-DF | Ⓒ | 1~ 230<br>1~ 230 | 50<br>60 | 1940<br>2280 | 940<br>1100 | 65<br>72 | 0.33<br>0.32 | 2.0/400<br>2.0/450 | 49<br>53 | 60<br>70 | -25 to +50<br>-25 to +65 | 2.5 | A1) |

subject to alterations

(1) 230 VAC Δ / 400 VAC Y

## Curves

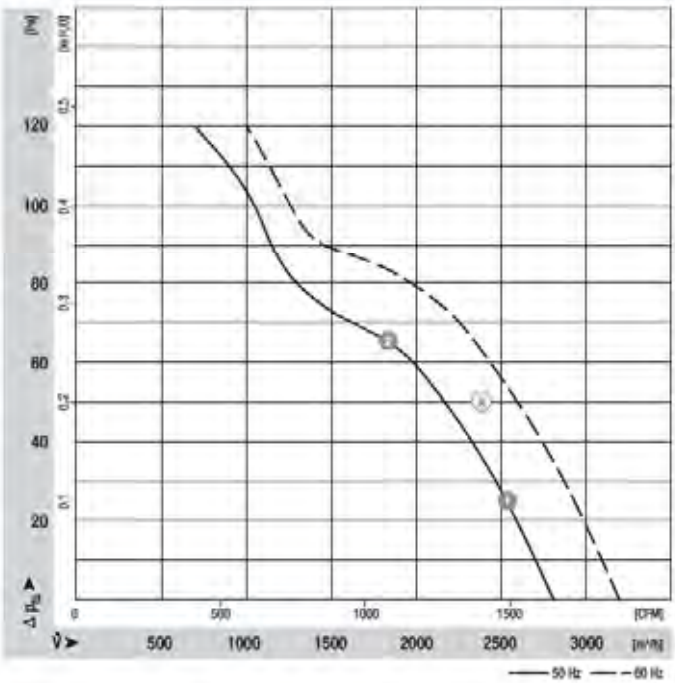


| | n [rpm] | $P_1$ [W] | I [A] |
|---|---|---|---|
| Ⓐ ❶ | 1370 | 102 | 0.45/0.26 |
| Ⓐ ❷ | 1325 | 126 | 0.48/0.28 |



ebmpapst

- **Motor protection:** ⓐ Without TOP, ⓑ ⓒ TOP wired internally
- **Cable exit:** Axial
- **Protection class:** I
- **Product conforming to standards:** EN 60335-1, ⓑ ⓒ also CE
- **Approvals:** ⓑ ⓒ CCC

Direction of air flow

| | ❮ "V"/"A" ❯ Without attachments | ❮ "V"/"A" ❯ With full round nozzle | ❮ "V"/"A" ❯ With guard grille for full nozzle | ❮ "V"/"A" ❯ With guard grille for short nozzle |
|---|---|---|---|---|
| "V" | A4D 330-AP10 -01 | W4D 330-CP10 -30 | S4D 330-BP10 -30 | S4D 330-AP10 -30 |
| "A" | A4D 330-AP10 -02 | W4D 330-CP10 -31 | S4D 330-BP10 -31 | S4D 330-AP10 -31 |
| "V" | A4E 330-AP18 -01 | W4E 330-CP18 -30 | S4E 330-BP18 -30 | S4E 330-AP18 -30 |
| "A" | A4E 330-AP18 -02 | W4E 330-CP18 -31 | S4E 330-BP18 -31 | S4E 330-AP18 -31 |
| "V" | A6E 330-AP02 -01 | W6E 330-CP02 -30 | S6E 330-BP02 -30 | S6E 330-AP02 -30 |
| "A" | A6E 330-AP02 -02 | W6E 330-CP02 -31 | S6E 330-BP02 -31 | S6E 330-AP02 -31 |

## Curves

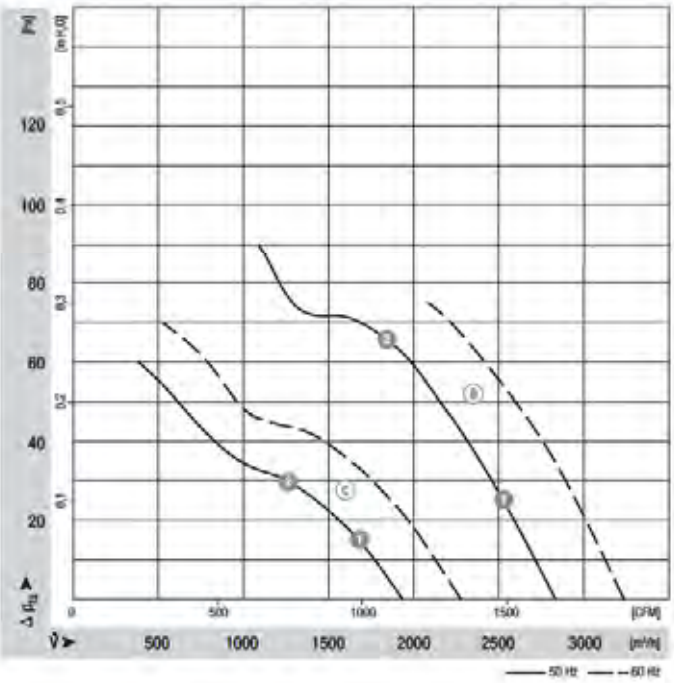


| | | n [rpm] | $P_1$ [W] | I [A] |
|---|---|---|---|---|
| ⓐ | 1 | 1375 | 122 | 0.58 |
| ⓑ | 3 | 1325 | 140 | 0.64 |
| ⓒ | 2 | 925 | 68 | 0.34 |
| ⓓ | 4 | 910 | 70 | 0.35 |

# AC axial fans

S series, Ø 330, drawings of directions of air flow "V" and "A"

## Without attachments

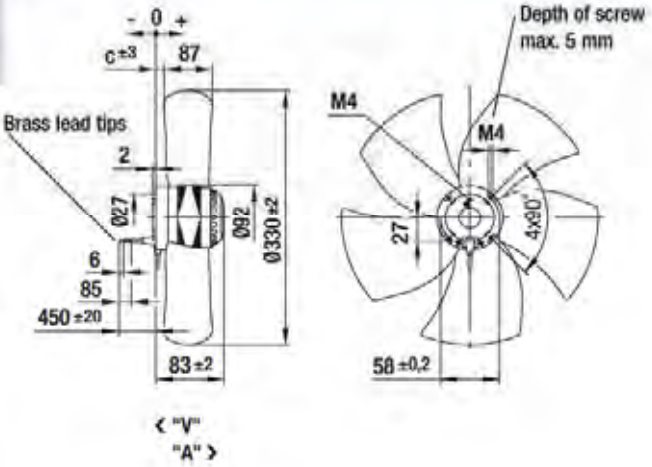


| Type | | c |
|---|---|---|
| A4D 330-AP10 -01 | "V" | 6.0 |
| A4D 330-AP10 -02 | "A" | -8.0 |
| A4E 330-AP18 -01 | "V" | 6.0 |
| A4E 330-AP18 -02 | "A" | -8.0 |
| A6E 330-AP02 -01 | "V" | 6.0 |
| A6E 330-AP02 -02 | "A" | -8.0 |

## With full round nozzle

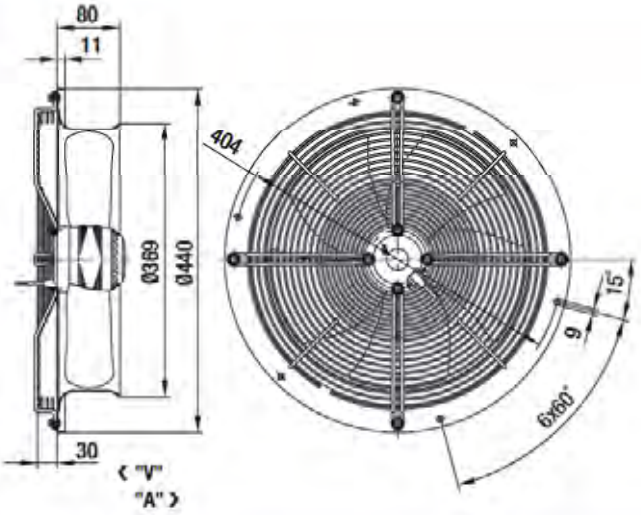


| Type | |
|---|---|
| W4D 330-CP10 -30 | "V" |
| W4D 330-CP10 -31 | "A" |
| W4E 330-CP18 -30 | "V" |
| W4E 330-CP18 -31 | "A" |
| W6E 330-CP02 -30 | "V" |
| W6E 330-CP02 -31 | "A" |

## With guard grille for full nozzle

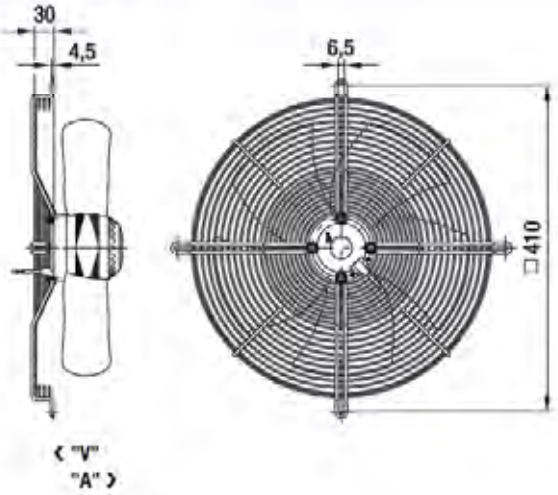


| Type | |
|---|---|
| S4D 330-BP10 -30 | "V" |
| S4D 330-BP10 -31 | "A" |
| S4E 330-BP18 -30 | "V" |
| S4E 330-BP18 -31 | "A" |
| S6E 330-BP02 -30 | "V" |
| S6E 330-BP02 -31 | "A" |

## With guard grille for short nozzle

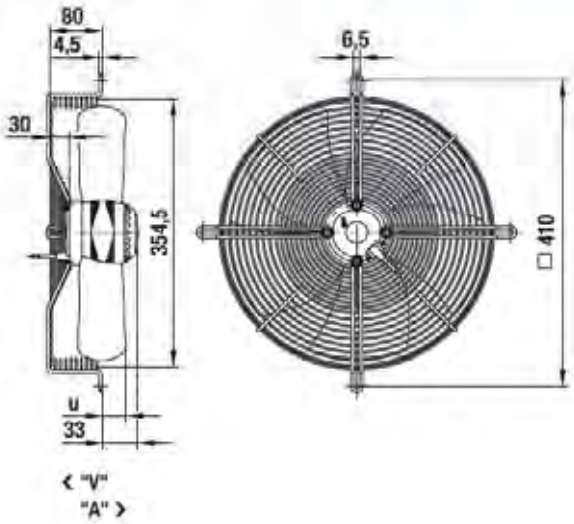


| Type | | u |
|---|---|---|
| S4D 330-AP10 -30 | "V" | 43.0 |
| S4D 330-AP10 -31 | "A" | 29.0 |
| S4E 330-AP18 -30 | "V" | 43.0 |
| S4E 330-AP18 -31 | "A" | 29.0 |
| S6E 330-AP02 -30 | "V" | 43.0 |
| S6E 330-AP02 -31 | "A" | 29.0 |

# AC axial fans

## S series, Ø 350

- **Material:** Guard grille: Steel, phosphated and coated in black plastic
  Wall ring: Sheet steel, pre-galvanised and coated in black plastic
  Blades: Sheet steel, coated in black
  Rotor: Coated in black
- **Number of blades:** 5
- **Direction of rotation:** Direction of air flow "V" counter-clockwise, direction of air flow "A" counter-clockwise, seen on rotor
- **Type of protection:** IP 44
- **Insulation class:** Ⓐ Ⓒ "B", Ⓑ "F"
- **Mounting position:** Shaft horizontal or rotor on bottom; rotor on top on request
- **Condensate discharges:** Rotor-side
- **Mode of operation:** Continuous operation (S1)
- **Bearings:** Maintenance-free ball bearings

| Nominal data | | Curve | Nominal voltage | Frequency | Air flow | Speed/rpm | Power input | Current draw | Capacitor | Sound pressure level | Max. operative range | Perm. amb. temp. | Mass without attachments | Electr. connection |
|---|---|---|---|---|---|---|---|---|---|---|---|---|---|---|
| **Type** | **Motor** | | **VAC** | **Hz** | **m³/h** | **rpm** | **W** | **A** | **µF/VDB** | **dB(A)** | **Pa** | **°C** | **kg** | **p. 416 f.** |
| ***4D 350** (1) | M4D 068-EC | Ⓐ | 3~ 230/400<br>3~ 230/400 | 50<br>60 | 3340<br>3815 | 1420<br>1620 | 135<br>185 | 0.73/0.42<br>0.64/0.37 | —<br>— | 64<br>68 | 120<br>145 | -25 to +60<br>-25 to +45 | 3.6 | C1)/C2) |
| ***4E 350** | M4E 068-EC | Ⓑ | 1~ 230<br>1~ 230 | 50<br>60 | 3250<br>3640 | 1365<br>1530 | 132<br>180 | 0.58<br>0.80 | 5.0/400<br>5.0/400 | 64<br>67 | 90<br>65 | -25 to +60<br>-25 to +50 | 3.6 | A1) |
| ***6E 350** | M6E 068-DF | Ⓒ | 1~ 230<br>1~ 230 | 50<br>60 | 2110<br>2420 | 905<br>1040 | 60<br>85 | 0.27<br>0.38 | 2.5/400<br>2.5/400 | 55<br>58 | 40<br>45 | -25 to +60<br>-25 to +55 | 3.6 | A1) |

subject to alterations

(1) 230 VAC Δ / 400 VAC Y

## Curves

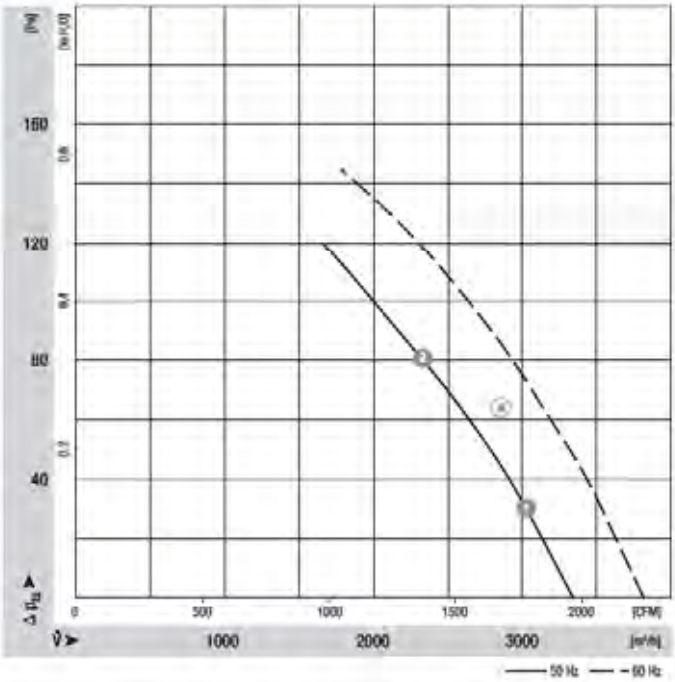


| | n [rpm] | $P_1$ [W] | I [A] |
|---|---|---|---|
| Ⓐ ❶ | 1400 | 150 | 0.75/0.43 |
| Ⓐ ❷ | 1380 | 173 | 0.75/0.43 |



Drawings
p. 50 f.

ebmpapst

- **Motor protection:** ⓐ Without TOP, ⓑ ⓒ TOP wired internally
- **Cable exit:** ⓐ Lateral, ⓑ ⓒ axial
- **Protection class:** I
- **Product conforming to standards:** EN 60335-1, ⓑ ⓒ also CE

| Direction of air flow | ❮ "V"/"A" ❯ Without attachments | ❮ "V"/"A" ❯ With full round nozzle | ❮ "V"/"A" ❯ With guard grille for full nozzle | ❮ "V"/"A" ❯ With guard grille for short nozzle | ❮ "V" In-line duct fan |
|---|---|---|---|---|---|
| "V" | A4D 350-AR06 -01 | W4D 350-CR06 -30 | S4D 350-BR06 -30 | S4D 350-AR06 -30 | W4D 350-IR06 -01 |
| "A" | A4D 350-AR06 -02 | W4D 350-CR06 -31 | S4D 350-BR06 -31 | S4D 350-AR06 -31 | — |
| "V" | A4E 350-AR06 -01 | W4E 350-CR06 -30 | S4E 350-BR06 -30 | S4E 350-AR06 -30 | W4E 350-IR06 -01 |
| "A" | A4E 350-AR06 -02 | W4E 350-CR06 -31 | S4E 350-BR06 -31 | S4E 350-AR06 -31 | — |
| "V" | A6E 350-AR08 -01 | W6E 350-CR08 -30 | S6E 350-BR08 -30 | S6E 350-AR08 -30 | — |
| "A" | A6E 350-AR08 -02 | W6E 350-CR08 -31 | S6E 350-BR08 -31 | S6E 350-AR08 -31 | — |

## Curves

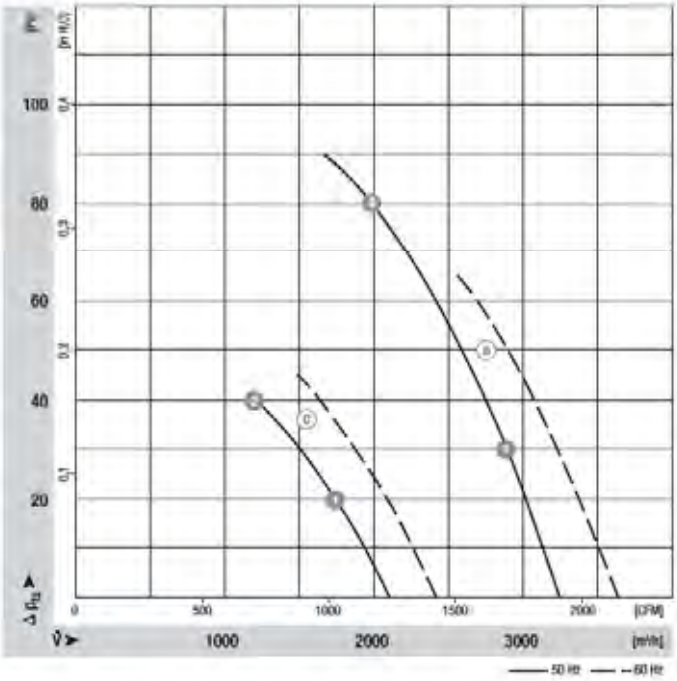


| | | n [rpm] | $P_1$ [W] | I [A] |
|---|---|---|---|---|
| ⓐ | ❶ | 1335 | 142 | 0.63 |
| ⓑ | ❷ | 1260 | 166 | 0.74 |
| ⓒ | ❸ | 880 | 63 | 0.28 |
| ⓓ | ❹ | 825 | 68 | 0.30 |

# AC axial fans

S series, Ø 350, drawings of directions of air flow "V" and "A"

## Without attachments

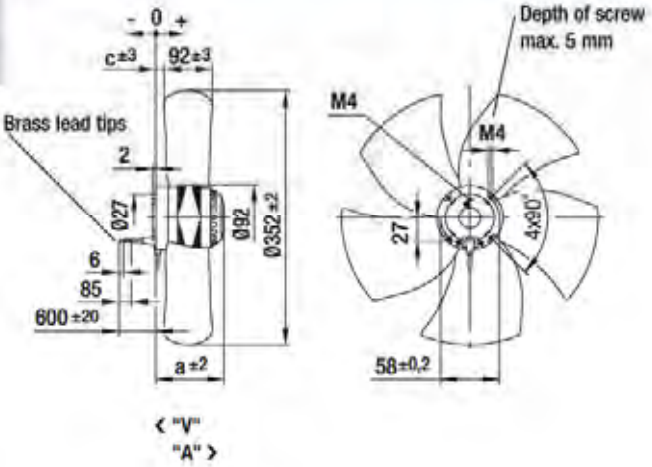


| Type | | a | c |
|---|---|---|---|
| A4D 350-AR06 -01 | "V" | 102.0 | 10.0 |
| A4D 350-AR06 -02 | "A" | 102.0 | -10.0 |
| A4E 350-AR06 -01 | "V" | 102.0 | 10.0 |
| A4E 350-AR06 -02 | "A" | 102.0 | -10.0 |
| A6E 350-AR08 -01 | "V" | 83.0 | 5.0 |
| A6E 350-AR08 -02 | "A" | 83.0 | -12.0 |

## With full round nozzle

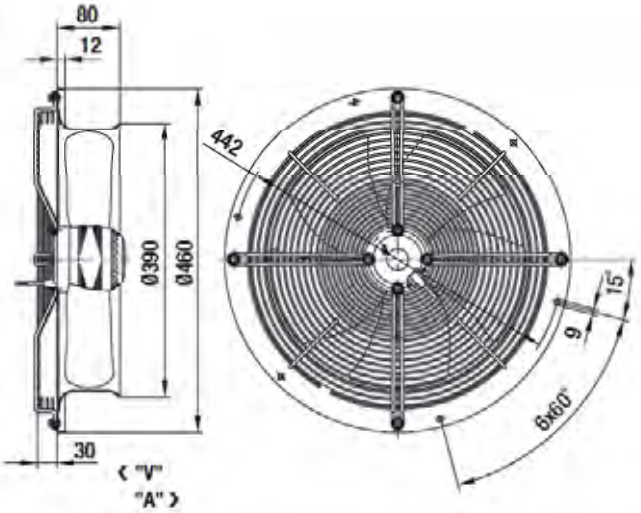


| Type | |
|---|---|
| W4D 350-CR06 -30 | "V" |
| W4D 350-CR06 -31 | "A" |
| W4E 350-CR06 -30 | "V" |
| W4E 350-CR06 -31 | "A" |
| W6E 350-CR08 -30 | "V" |
| W6E 350-CR08 -31 | "A" |

## With guard grille for full nozzle

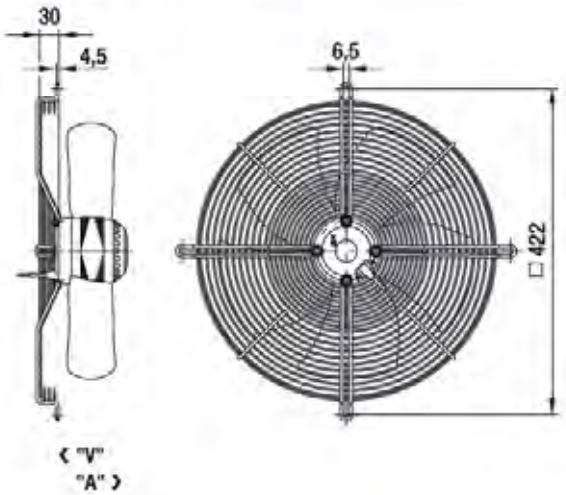


| Type | |
|---|---|
| S4D 350-BR06 -30 | "V" |
| S4D 350-BR06 -31 | "A" |
| S4E 350-BR06 -30 | "V" |
| S4E 350-BR06 -31 | "A" |
| S6E 350-BR08 -30 | "V" |
| S6E 350-BR08 -31 | "A" |

## With guard grille for short nozzle

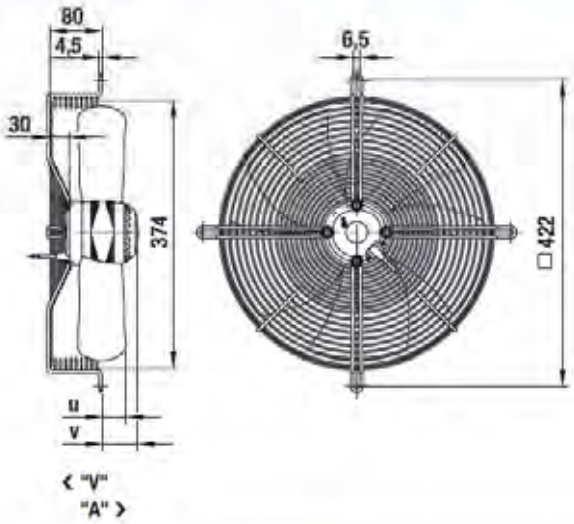


| Type | | u | v |
|---|---|---|---|
| S4D 350-AR06 -30 | "V" | 52.0 | 52.0 |
| S4D 350-AR06 -31 | "A" | 32.0 | 52.0 |
| S4E 350-AR06 -30 | "V" | 52.0 | 52.0 |
| S4E 350-AR06 -31 | "A" | 32.0 | 52.0 |
| S6E 350-AR08 -30 | "V" | 47.0 | 33.0 |
| S6E 350-AR08 -31 | "A" | 30.0 | 33.0 |

## In-line duct fan

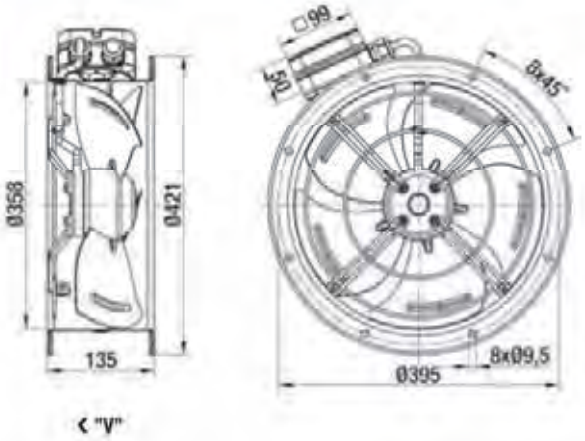


| Type | |
|---|---|
| W4D 350-IR06 -01 | "V" |
| W4E 350-IR06 -01 | "V" |

# AC axial fans

## S series, Ø 400

- **Material:** Guard grille: Steel, phosphated and coated in black plastic
  Wall ring: Sheet steel, pre-galvanised and coated in black plastic
  Blades: Sheet steel, coated in black
  Rotor: Coated in black
- **Number of blades:** 5
- **Direction of rotation:** Direction of air flow "V" counter-clockwise, direction of air flow "A" counter-clockwise, seen on rotor
- **Type of protection:** IP 44
- **Insulation class:** Ⓐ Ⓑ "B", Ⓒ "F"
- **Mounting position:** Shaft horizontal or rotor on bottom; rotor on top on request
- **Condensate discharges:** Rotor-side
- **Mode of operation:** Continuous operation (S1)
- **Bearings:** Maintenance-free ball bearings

| Nominal data | | Curve | Nominal voltage | Frequency | Air flow | Speed/rpm | Power input | Current draw | Capacitor | Sound pressure level | Max. operative range | Perm. amb. temp. | Mass without attachments | Electr. connection |
|---|---|---|---|---|---|---|---|---|---|---|---|---|---|---|
| Type | Motor | | VAC | Hz | m³/h | rpm | W | A | µF/VDB | dB(A) | Pa | °C | kg | p. 416 f. |
| *4D 400 (1)(2) | M4D 074-EI | Ⓐ | 3~ 230/400<br>3~ 230/400 | 50<br>60 | 4000<br>4610 | 1450<br>1690 | 135<br>185 | 0.76/0.44<br>0.68/0.39 | —<br>— | 68<br>72 | 150<br>120 | -25 to +40<br>-25 to +40 | 4.2 | C1)/C2) |
| *4E 400 | M4E 074-EI | Ⓑ | 1~ 230<br>1~ 230 | 50<br>60 | 4235<br>4950 | 1430<br>1700 | 160<br>240 | 0.73<br>1.06 | 6.0/400<br>6.0/400 | 69<br>73 | 150<br>75 | -25 to +40<br>-25 to +40 | 4.2 | A1) |
| *6E 400 | M6E 074-DF | Ⓒ | 1~ 230<br>1~ 230 | 50<br>60 | 3290<br>3780 | 940<br>1080 | 120<br>170 | 0.55<br>0.75 | 3.0/450<br>3.0/400 | 59<br>62 | 50<br>40 | -25 to +40<br>-25 to +60 | 4.0 | A1) |

subject to alterations

(1) 400 VAC Δ/Y for two speed steps available on request

(2) 230 VAC Δ / 400 VAC Y

## Curves

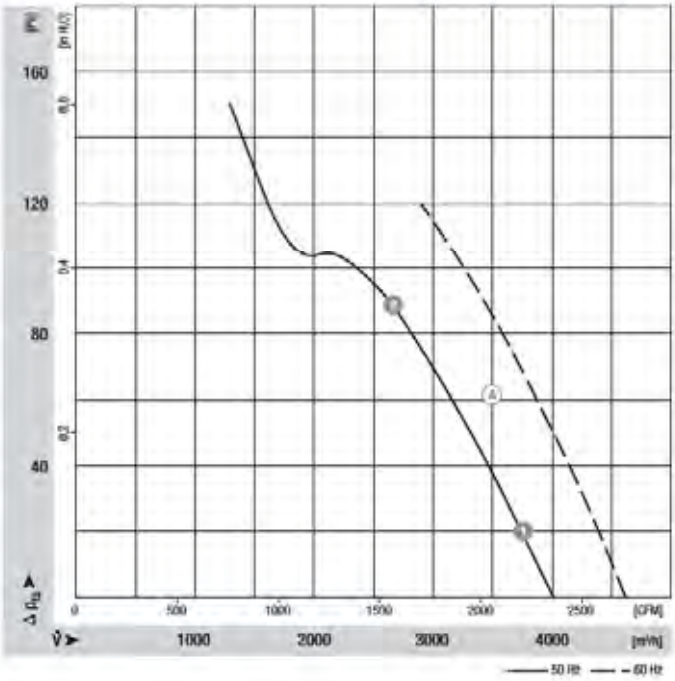


| | n [rpm] | $P_1$ [W] | I [A] |
|---|---|---|---|
| Ⓐ ❶ | 1440 | 152 | 0.82/0.47 |
| Ⓐ ❷ | 1415 | 195 | 0.86/0.50 |



Drawings
p. 54 f.

ebmpapst

- **Motor protection:** ⓐ Without TOP, ⓑ ⓒ TOP wired internally
- **Cable exit:** Variable
- **Protection class:** I
- **Product conforming to standards:** EN 60335-1, ⓑ ⓒ also CE
- **Approvals:** CCC
- **Options:** Terminal box

| Direction of air flow | ❮ "V"/"A" ❯ Without attachments | ❮ "V"/"A" ❯ With full round nozzle | ❮ "V"/"A" ❯ With guard grille for full nozzle | ❮ "V"/"A" ❯ With guard grille for short nozzle | ❮ "V" In-line duct fan |
|---|---|---|---|---|---|
| "V" | A4D 400-AP12 -01 | W4D 400-CP12 -30 | S4D 400-BP12 -30 | S4D 400-AP12 -03 | W4D 400-IP12 -01 |
| "A" | A4D 400-AP12 -02 | W4D 400-CP12 -31 | S4D 400-BP12 -31 | S4D 400-AP12 -04 | — |
| "V" | A4E 400-AP02 -01 | W4E 400-CP02 -30 | S4E 400-BP02 -30 | S4E 400-AP02 -03 | W4E 400-IP02 -01 |
| "A" | A4E 400-AP02 -02 | W4E 400-CP02 -31 | S4E 400-BP02 -31 | S4E 400-AP02 -04 | — |
| "V" | A6E 400-AP10 -01 | W6E 400-CP10 -30 | S6E 400-BP10 -30 | S6E 400-AP10 -30 | — |
| "A" | A6E 400-AP10 -02 | W6E 400-CP10 -31 | S6E 400-BP10 -31 | S6E 400-AP10 -31 | — |

## Curves

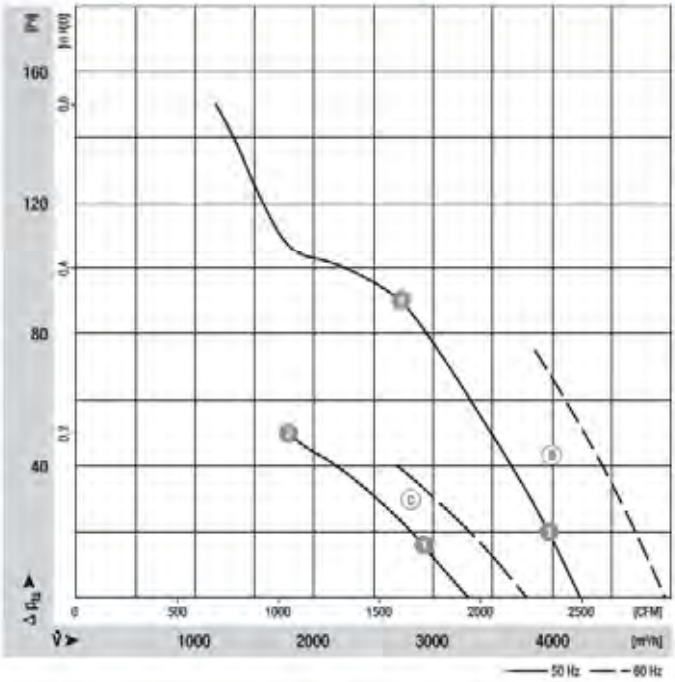


| | n [rpm] | $P_1$ [W] | I [A] |
|---|---|---|---|
| ⓐ ❶ | 1430 | 172 | 0.78 |
| ⓑ ❸ | 1395 | 210 | 0.93 |
| ⓒ ❷ | 935 | 126 | 0.57 |
| ⓓ ❹ | 895 | 140 | 0.62 |

# AC axial fans

S series, Ø 400, drawings of directions of air flow "V" and "A"

## Without attachments

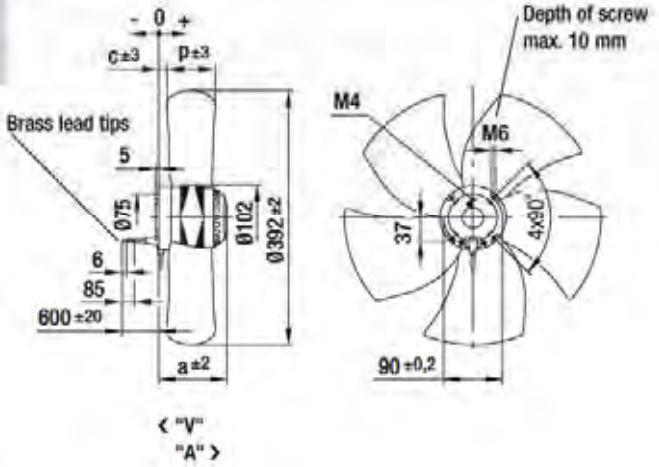


| Type | | a | c | p |
|---|---|---|---|---|
| A4D 400-AP12 -01 | "V" | 117.0 | 26.0 | 68.0 |
| A4D 400-AP12 -02 | "A" | 117.0 | 22.0 | 68.0 |
| A4E 400-AP02 -01 | "V" | 117.0 | 26.0 | 68.0 |
| A4E 400-AP02 -02 | "A" | 117.0 | 22.0 | 68.0 |
| A6E 400-AP10 -01 | "V" | 104.0 | -5.0 | 90.0 |
| A6E 400-AP10 -02 | "A" | 104.0 | 14.0 | 88.0 |

## With full round nozzle

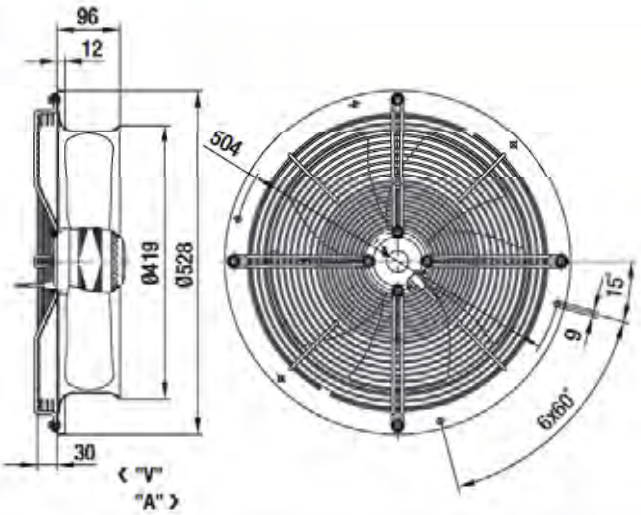


| Type | |
|---|---|
| W4D 400-CP12 -30 | "V" |
| W4D 400-CP12 -31 | "A" |
| W4E 400-CP02 -30 | "V" |
| W4E 400-CP02 -31 | "A" |
| W6E 400-CP10 -30 | "V" |
| W6E 400-CP10 -31 | "A" |

## With guard grille for full nozzle

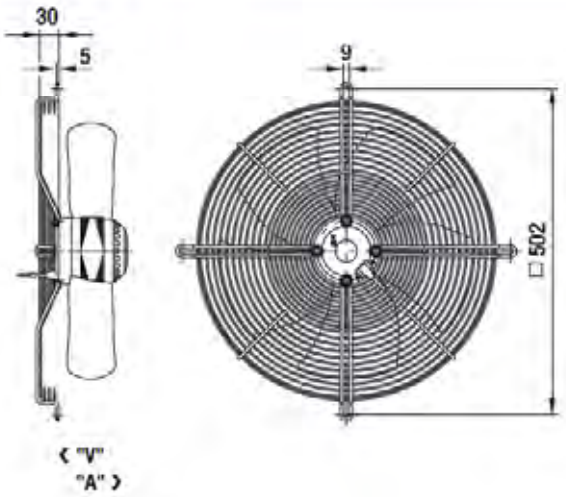


| Type | |
|---|---|
| S4D 400-BP12 -30 | "V" |
| S4D 400-BP12 -31 | "A" |
| S4E 400-BP02 -30 | "V" |
| S4E 400-BP02 -31 | "A" |
| S6E 400-BP10 -30 | "V" |
| S6E 400-BP10 -31 | "A" |

## With guard grille for short nozzle

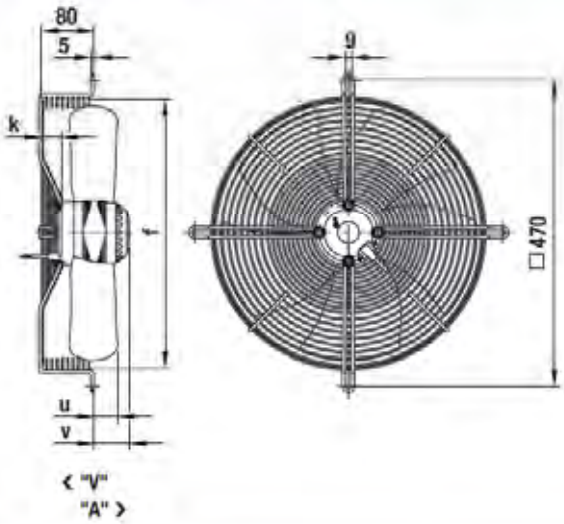


| Type | | f | k | u | v |
|---|---|---|---|---|---|
| S4D 400-AP12 -03 | "V" | 420.0 | 10.0 | 24.0 | 47.0 |
| S4D 400-AP12 -04 | "A" | 420.0 | 10.0 | 20.0 | 47.0 |
| S4E 400-AP02 -03 | "V" | 420.0 | 10.0 | 24.0 | 47.0 |
| S4E 400-AP02 -04 | "A" | 420.0 | 10.0 | 20.0 | 47.0 |
| S6E 400-AP10 -30 | "V" | 414.0 | 30.0 | 35.0 | 54.0 |
| S6E 400-AP10 -31 | "A" | 414.0 | 30.0 | 52.0 | 54.0 |

## In-line duct fan

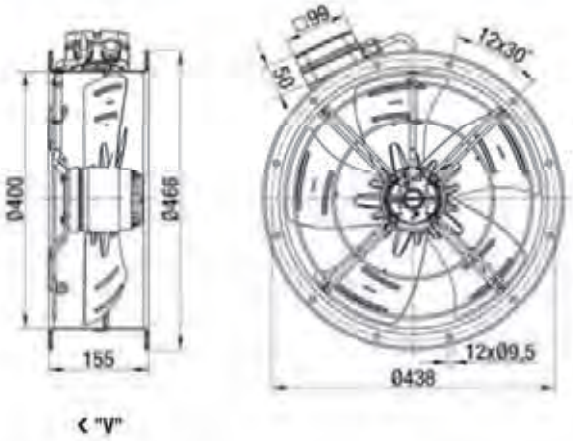


| Type | |
|---|---|
| W4D 400-IP12 -01 | "V" |
| W4E 400-IP02 -01 | "V" |

# AC axial fans

S series, Ø 420

- **Material:** Guard grille: Steel, phosphated and coated in black plastic
  Wall ring: Sheet steel, pre-galvanised and coated in black plastic
  Blades: Plastic, coated in black
  Rotor: Coated in black
- **Number of blades:** 5
- **Direction of rotation:** Direction of air flow "V" counter-clockwise, direction of air flow "A" counter-clockwise, seen on rotor
- **Type of protection:** IP 54 (acc. to EN 60529)
- **Insulation class:** "F"
- **Mounting position:** Shaft horizontal or rotor on bottom; rotor on top on request
- **Condensate discharges:** Rotor-side
- **Mode of operation:** Continuous operation (S1)
- **Bearings:** Maintenance-free ball bearings

| Nominal data | | Curve | Nominal voltage | Frequency | Speed/rpm (1) | Max. power input (1) | Max. current draw (1) | Capacitor | Max. operative range | Perm. amb. temp. | Mass without attachments | Electr. connection |
|---|---|---|---|---|---|---|---|---|---|---|---|---|
| Type | Motor | | VAC | Hz | rpm | W | A | µF/VDB | Pa | °C | kg | p. 416 f. |
| *4D 420 | M4D 094-EA | Ⓐ | 3~ 400 Δ | 50 | 1360 | 260 | 0.52 | — | 95 | -40 to +60 | 5.8 | F1b)/F2b) |
| | | Ⓑ | 3~ 400 Y | 50 | 1060 | 185 | 0.31 | — | 60 | -40 to +60 | | |
| | | Ⓒ | 3~ 400 Δ | 60 | 1490 | 385 | 0.65 | — | 110 | -40 to +60 | 5.8 | F1b)/F2b) |
| | | Ⓓ | 3~ 400 Y | 60 | 970 | 220 | 0.37 | — | 47 | -40 to +60 | | |
| *4E 420 | M4E 094-EA | Ⓔ | 1~ 230 | 50 | 1360 | 280 | 1.25 | 7.0/400 | 95 | -40 to +60 | 5.8 | A2b) |
| | | | 1~ 230 | 60 | 1520 | 385 | 1.68 | 7.0/400 | 100 | -40 to +60 | | |

subject to alterations

(1) Nominal data in operating point with maximum load

## Curves

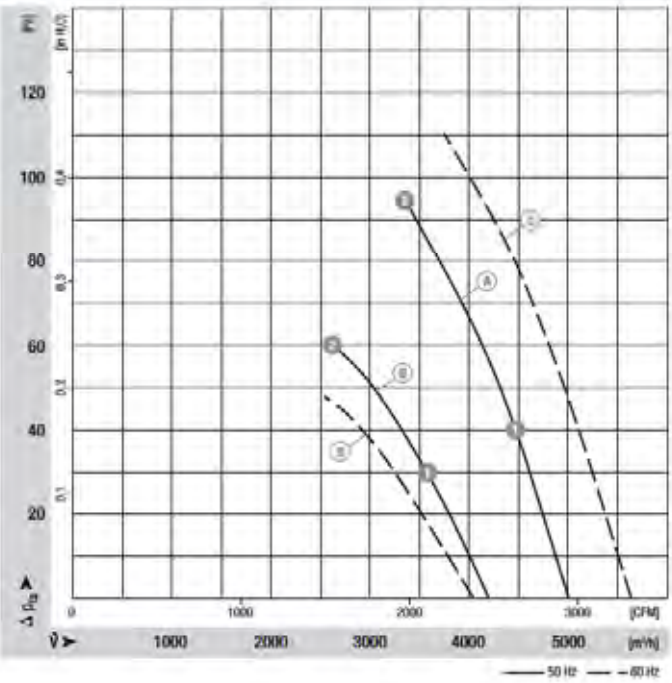


| | n [rpm] | $P_1$ [W] | I [A] | $Lp_A$ [dB(A)] |
|---|---|---|---|---|
| Ⓐ ❶ | 1380 | 225 | 0.47 | 67 |
| Ⓐ ❷ | 1380 | 260 | 0.52 | 65 |
| Ⓑ ❶ | 1120 | 170 | 0.29 | 61 |
| Ⓑ ❷ | 1060 | 185 | 0.31 | 58 |



ebmpapst

- **Motor protection:** ⓑ-ⓓ Design with thermal overload protector, ⓔ TOP wired internally
- **Cable exit:** Lateral via terminal box
- **Protection class:** I (acc. to EN 61800-5-1)
- **Product conforming to standard:** CE

| Direction of air flow | < "V"/"A" > Without attachments | < "V"/"A" > With full round nozzle | < "V"/"A" > With guard grille for full nozzle | < "V"/"A" > With guard grille for short nozzle |
|---|---|---|---|---|
| "V" | A4D 420-AU02 -01 | W4D 420-CU02 -30 | S4D 420-BU02 -30 | S4D 420-AU02 -03 |
| "A" | A4D 420-AU02 -02 | W4D 420-CU02 -31 | S4D 420-BU02 -31 | S4D 420-AU02 -04 |
| "V" | A4E 420-AU03 -01 | W4E 420-CU03 -30 | S4E 420-BU03 -30 | S4E 420-AU03 -03 |
| "A" | A4E 420-AU03 -02 | W4E 420-CU03 -31 | S4E 420-BU03 -31 | S4E 420-AU03 -04 |

## Curves

| | n [rpm] | $P_1$ [W] | I [A] | $Lp_A$ [dB(A)] |
|---|---|---|---|---|
| ⓕ ❶ | 1390 | 247 | 1.13 | 67 |
| ⓔ ❷ | 1380 | 280 | 1.25 | 65 |

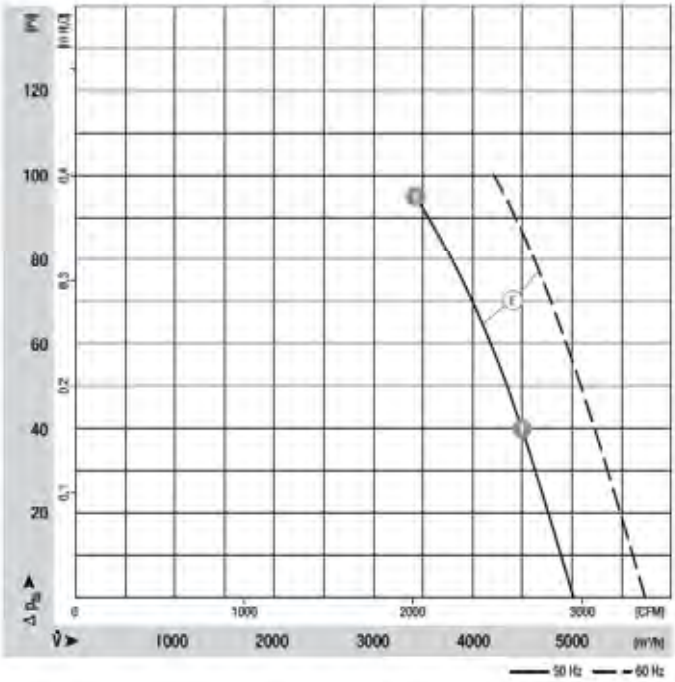

# AC axial fans

S series, Ø 420, drawings of directions of air flow "V" and "A"

## Without attachments

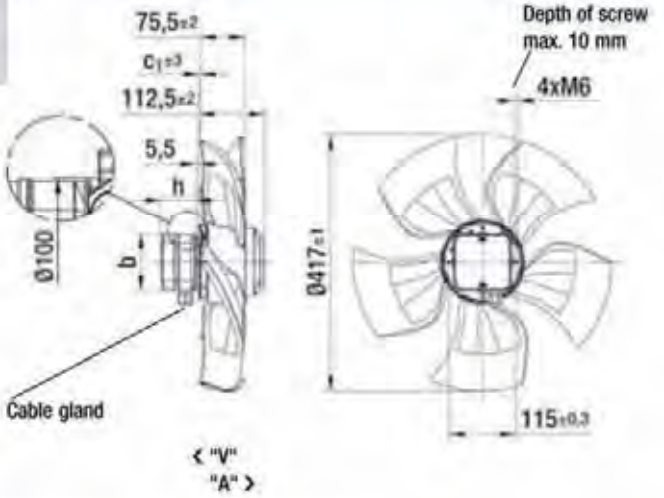


| Type | | b | $c_1$ | h |
|---|---|---|---|---|
| A4D 420-AU02 -01 | "V" | Ø 89 | 2.0 | 33.5 |
| A4D 420-AU02 -02 | "A" | Ø 89 | 16.0 | 33.5 |
| A4E 420-AU03 -01 | "V" | 99x99 | 2.0 | 59.5 |
| A4E 420-AU03 -02 | "A" | 99x99 | 16.0 | 59.5 |

## With full round nozzle

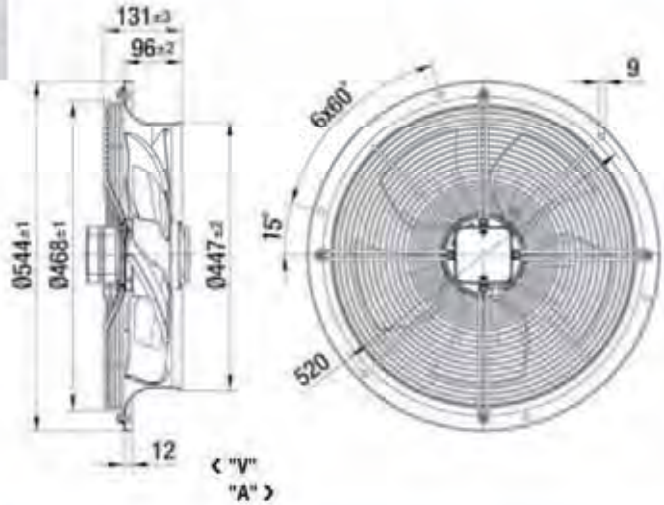


| Type | |
|---|---|
| W4D 420-CU02 -30 | "V" |
| W4D 420-CU02 -31 | "A" |
| W4E 420-CU03 -30 | "V" |
| W4E 420-CU03 -31 | "A" |

## With guard grille for full nozzle

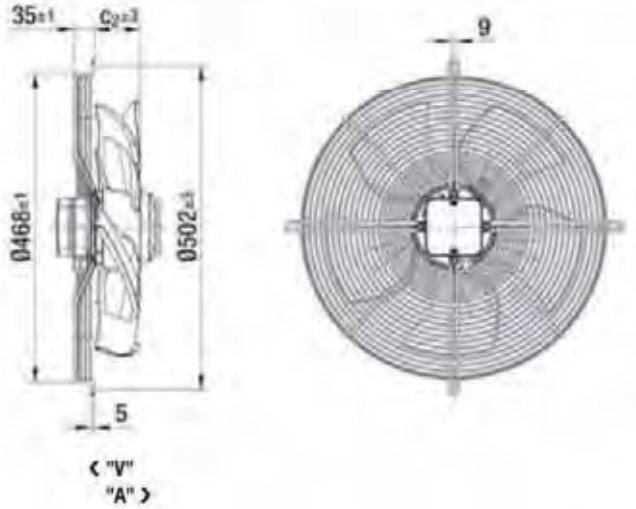


| Type | | $c_2$ |
|---|---|---|
| S4D 420-BU02 -30 | "V" | 77.5 |
| S4D 420-BU02 -31 | "A" | 91.5 |
| S4E 420-BU03 -30 | "V" | 77.5 |
| S4E 420-BU03 -31 | "A" | 91.5 |

## With guard grille for short nozzle

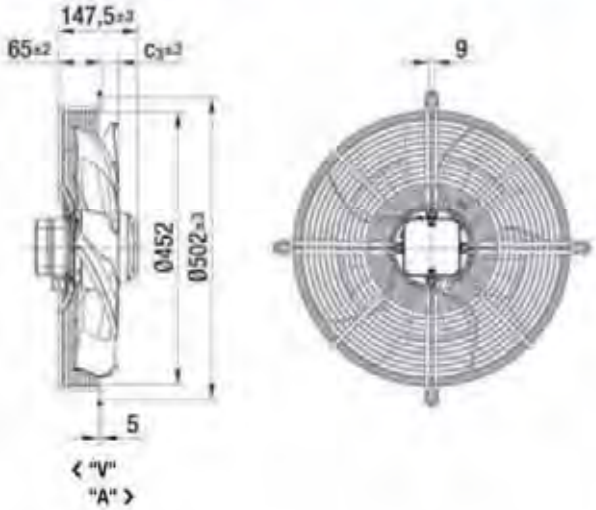


| Type | | $c_3$ |
|---|---|---|
| S4D 420-AU02 -03 | "V" | 47.5 |
| S4D 420-AU02 -04 | "A" | 61.5 |
| S4E 420-AU03 -03 | "V" | 47.5 |
| S4E 420-AU03 -04 | "A" | 61.5 |

# AC axial fans 6-pole

## S series, Ø 420 / 450

- **Material:** Guard grille: Steel, phosphated and coated in black plastic
  Wall ring: Sheet steel, pre-galvanised and coated in black plastic
  Blades: Sheet steel, coated in black
  Rotor: Coated in black
- **Number of blades:** 5
- **Direction of rotation:** Direction of air flow "V" counter-clockwise, direction of air flow "A" counter-clockwise, seen on rotor
- **Type of protection:** IP 44
- **Insulation class:** "F"
- **Mounting position:** Shaft horizontal or rotor on bottom; rotor on top on request
- **Condensate discharges:** Rotor-side
- **Mode of operation:** Continuous operation (S1)
- **Bearings:** Maintenance-free ball bearings

| Nominal data | | Curve | Nominal voltage | Frequency | Air flow | Speed/rpm | Power input | Current draw | Capacitor | Sound pressure level | Max. operative range | Perm. amb. temp. | Mass without attachments | Electr. connection |
|---|---|---|---|---|---|---|---|---|---|---|---|---|---|---|
| Type | Motor | | VAC | Hz | m³/h | rpm | W | A | µF/VDB | dB(A) | Pa | °C | kg | p. 416 f. |
| *6E 420 | M6E 074-EI | Ⓐ | 1~ 230<br>1~ 230 | 50<br>60 | 3940<br>4570 | 940<br>1090 | 145<br>205 | 0.67<br>0.90 | 4.0/450<br>4.0/450 | 60<br>63 | 90<br>80 | -25 to +50<br>-25 to +45 | 4.4 | A1) |
| *6E 450 | M6E 074-GA | Ⓑ | 1~ 230<br>1~ 230 | 50<br>60 | 4725<br>5450 | 940<br>1070 | 165<br>225 | 0.80<br>0.98 | 4.0/450<br>4.0/450 | 63<br>67 | 70<br>45 | -25 to +40<br>-25 to +40 | 5.0 | A1) |

subject to alterations

## Curves

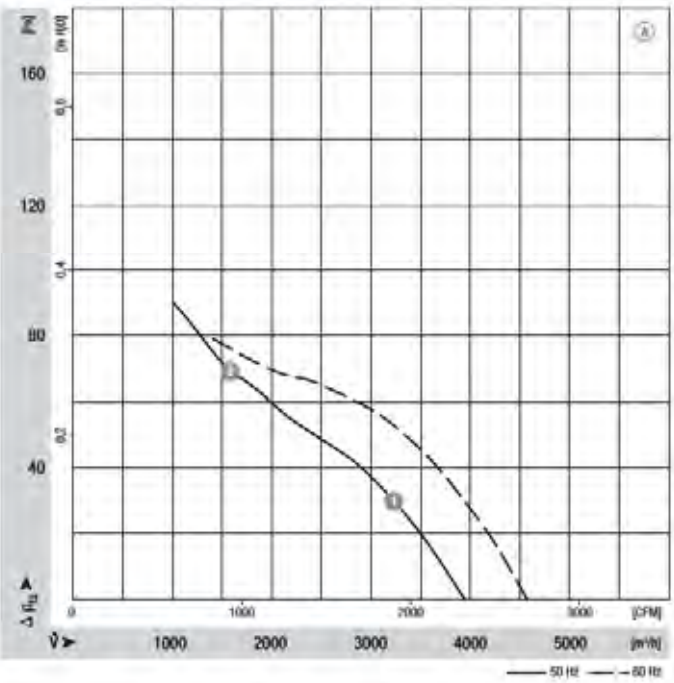


| | n [rpm] | $P_1$ [W] | I [A] |
|---|---|---|---|
| Ⓐ ❶ | 930 | 155 | 0.71 |
| Ⓐ ❷ | 890 | 176 | 0.80 |



ebmpapst

- **Motor protection:** TOP wired internally
- **Cable exit:** Variable
- **Protection class:** I
- **Product conforming to standards:** EN 60335-1, CE
- **Approvals:** CCC
- **Options:** Terminal box

Direction of air flow

| | ❮ "V"/"A" ❯ Without attachments | ❮ "V"/"A" ❯ With full round nozzle | ❮ "V"/"A" ❯ With guard grille for full nozzle | ❮ "V"/"A" ❯ With guard grille for short nozzle |
|---|---|---|---|---|
| "V" | A6E 420-AP02 -01 | W6E 420-CP02 -30 | S6E 420-BP02 -30 | S6E 420-AP02 -30 |
| "A" | A6E 420-AP02 -02 | W6E 420-CP02 -31 | S6E 420-BP02 -31 | S6E 420-AP02 -31 |
| "V" | A6E 450-AP02 -01 | W6E 450-CP02 -01 | S6E 450-BP02 -01 | S6E 450-AP02 -01 |
| "A" | A6E 450-AP02 -02 | W6E 450-CP02 -02 | S6E 450-BP02 -02 | S6E 450-AP02 -02 |

## Curves

| | n [rpm] | $P_1$ [W] | I [A] |
|---|---|---|---|
| ⑤ ❶ | 930 | 171 | 0.82 |
| ⑤ ❷ | 870 | 200 | 0.94 |

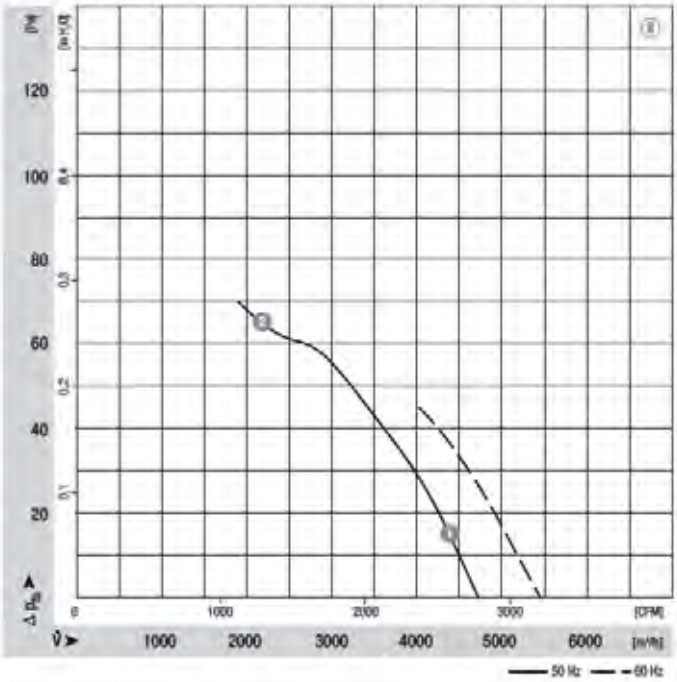

# AC axial fans

S series, Ø 420 / 450, drawings of directions of air flow "V" and "A"

## Without attachments

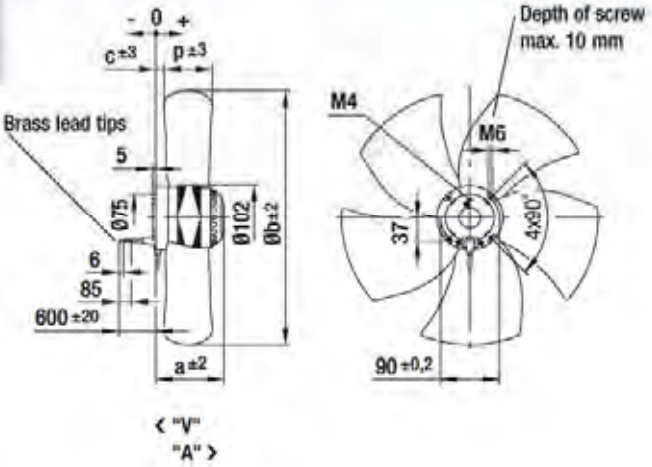


| Type | | a | b | c | p |
|---|---|---|---|---|---|
| A6E 420-AP02 -01 | "V" | 117.0 | 418.0 | 2.0 | 89.0 |
| A6E 420-AP02 -02 | "A" | 117.0 | 418.0 | 21.0 | 89.0 |
| A6E 450-AP02 -01 | "V" | 129.0 | 446.0 | 10.0 | 92.0 |
| A6E 450-AP02 -02 | "A" | 129.0 | 446.0 | 25.0 | 92.0 |

## With full round nozzle

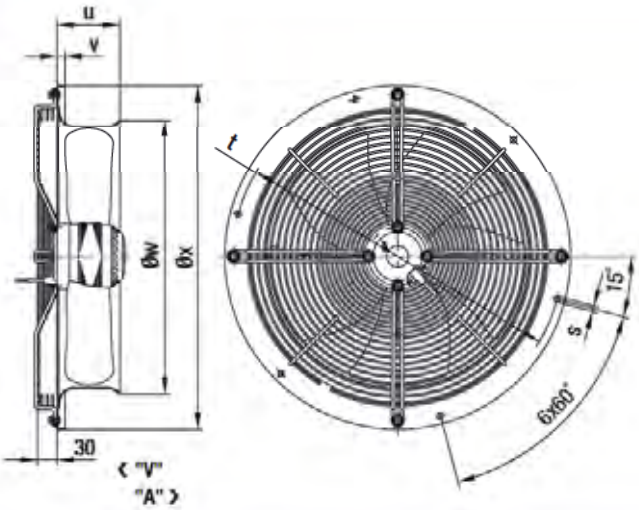


| Type | | s | t | u | v | w | x |
|---|---|---|---|---|---|---|---|
| W6E 420-CP02 -30 | "V" | 9.0 | 520.0 | 96.0 | 12.0 | 447.0 | 544.0 |
| W6E 420-CP02 -31 | "A" | 9.0 | 520.0 | 96.0 | 12.0 | 447.0 | 544.0 |
| W6E 450-CP02 -01 | "V" | 11.0 | 578.0 | 100.0 | 14.0 | 465.0 | 607.0 |
| W6E 450-CP02 -02 | "A" | 11.0 | 578.0 | 100.0 | 14.0 | 465.0 | 607.0 |

## With guard grille for full nozzle

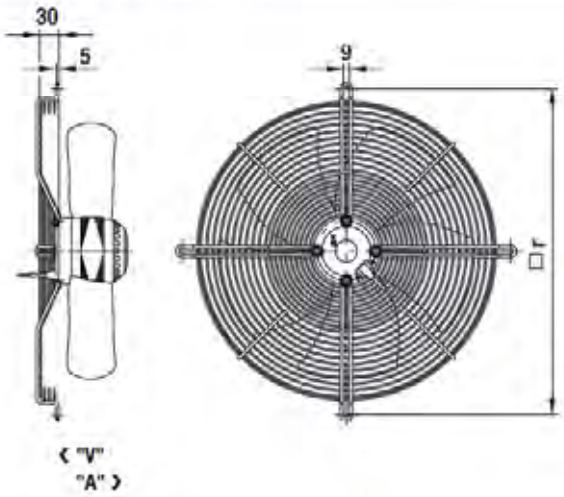


| Type | | r |
|---|---|---|
| S6E 420-BP02 -30 | "V" | 502.0 |
| S6E 420-BP02 -31 | "A" | 502.0 |
| S6E 450-BP02 -01 | "V" | 522.0 |
| S6E 450-BP02 -02 | "A" | 522.0 |

## With guard grille for short nozzle

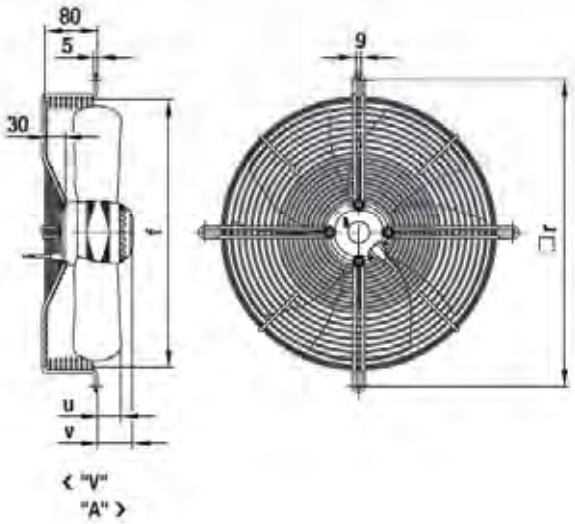


| Type | | f | r | u | v |
|---|---|---|---|---|---|
| S6E 420-AP02 -30 | "V" | 452.0 | 502.0 | 41.0 | 67.0 |
| S6E 420-AP02 -31 | "A" | 452.0 | 502.0 | 60.0 | 67.0 |
| S6E 450-AP02 -01 | "V" | 476.0 | 522.0 | 52.0 | 79.0 |
| S6E 450-AP02 -02 | "A" | 476.0 | 522.0 | 67.0 | 79.0 |

# AC axial fans

S series, Ø 450

- **Material:** Guard grille: Steel, phosphated and coated in black plastic
  Wall ring: Sheet steel, pre-galvanised and coated in black plastic
  Blades: Plastic, coated in black
  Rotor: Coated in black
- **Number of blades:** 5
- **Direction of rotation:** Direction of air flow "V" counter-clockwise, direction of air flow "A" counter-clockwise, seen on rotor
- **Type of protection:** IP 54 (acc. to EN 60529)
- **Insulation class:** "F"
- **Mounting position:** Shaft horizontal or rotor on bottom; rotor on top on request
- **Condensate discharges:** Rotor-side
- **Mode of operation:** Continuous operation (S1)
- **Bearings:** Maintenance-free ball bearings

| Nominal data | | Curve | Nominal voltage | Frequency | Speed/rpm (1) | Max. power input (1) | Max. current draw (1) | Capacitor | Max. operative range | Perm. amb. temp. | Mass without attachments | Electr. connection |
|---|---|---|---|---|---|---|---|---|---|---|---|---|
| Type | Motor | | VAC | Hz | rpm | W | A | µF/VDB | Pa | °C | kg | p. 416 f. |
| *4D 450 | M4D 094-EA | A | 3~ 400 Δ | 50 | 1250 | 340 | 0.61 | — | 120 | -40 to +60 | 6.0 | F1b)/F2b) |
| | | B | 3~ 400 Y | 50 | 875 | 200 | 0.33 | — | 60 | -40 to +60 | | |
| | | C | 3~ 400 Δ | 60 | 1360 | 415 | 0.70 | — | 85 | -40 to +50 | 6.0 | F1b)/F2b) |
| | | D | 3~ 400 Y | 60 | 860 | 205 | 0.35 | — | 35 | -40 to +50 | | |
| *4E 450 | M4E 094-EA | E | 1~ 230 | 50 | 1300 | 350 | 1.55 | 8.0/400 | 120 | -40 to +55 | 6.0 | A2b) |
| | | | 1~ 230 | 60 | 1490 | 425 | 1.87 | 8.0/400 | 50 | -40 to +45 | | |

subject to alterations

(1) Nominal data in operating point with maximum load

## Curves

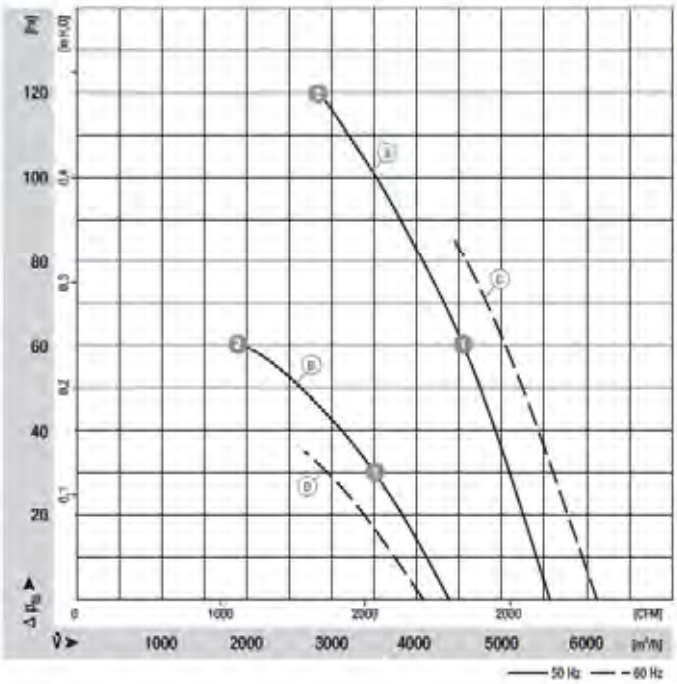


| | n [rpm] | $P_1$ [W] | I [A] | $Lp_A$ [dB(A)] |
|---|---|---|---|---|
| A 1 | 1300 | 285 | 0.54 | 67 |
| A 2 | 1250 | 340 | 0.61 | 64 |
| B 1 | 985 | 180 | 0.30 | 59 |
| B 2 | 875 | 200 | 0.33 | 54 |



ebmpapst

- **Motor protection:** ⓑ-ⓓ Design with thermal overload protector, ⓔ TOP wired internally
- **Cable exit:** Lateral via terminal box
- **Protection class:** I (acc. to EN 61800-5-1)
- **Product conforming to standard:** CE

| Direction of air flow | < "V"/"A" > Without attachments | < "V"/"A" > With full round nozzle | < "V"/"A" > With guard grille for full nozzle | < "V"/"A" > With guard grille for short nozzle |
|---|---|---|---|---|
| "V"<br>"A" | A4D 450-AU01 -01<br>A4D 450-AU01 -02 | W4D 450-CU01 -01<br>W4D 450-CU01 -02 | S4D 450-BU01 -01<br>S4D 450-BU01 -02 | S4D 450-AU01 -01<br>S4D 450-AU01 -02 |
| "V"<br>"A" | A4E 450-AU03 -01<br>A4E 450-AU03 -02 | W4E 450-CU03 -01<br>W4E 450-CU03 -02 | S4E 450-BU03 -01<br>S4E 450-BU03 -02 | S4E 450-AU03 -01<br>S4E 450-AU03 -02 |

## Curves

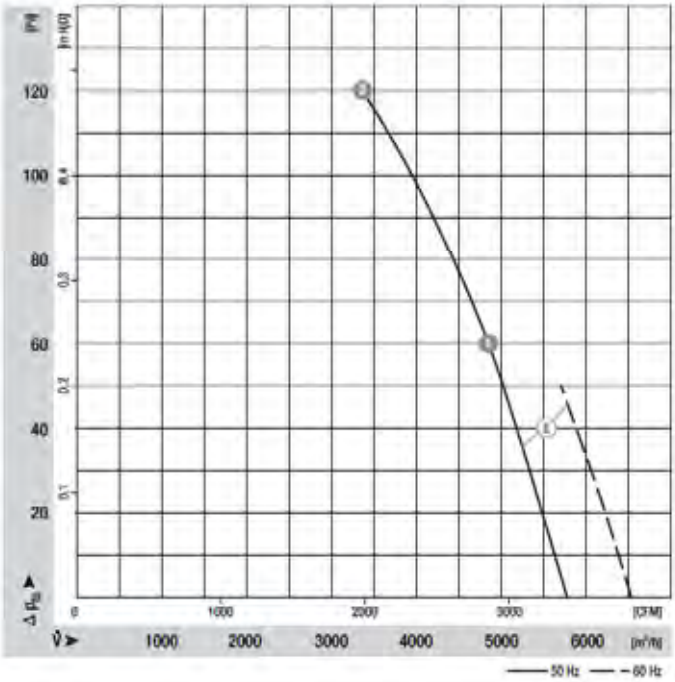


| | n [rpm] | $P_1$ [W] | I [A] | $Lp_A$ [dB(A)] |
|---|---|---|---|---|
| ⓕ ❶ | 1350 | 310 | 1.35 | 68 |
| ⓓ ❷ | 1300 | 350 | 1.55 | 65 |

# AC axial fans

S series, Ø 450, drawings of directions of air flow "V" and "A"

## Without attachments

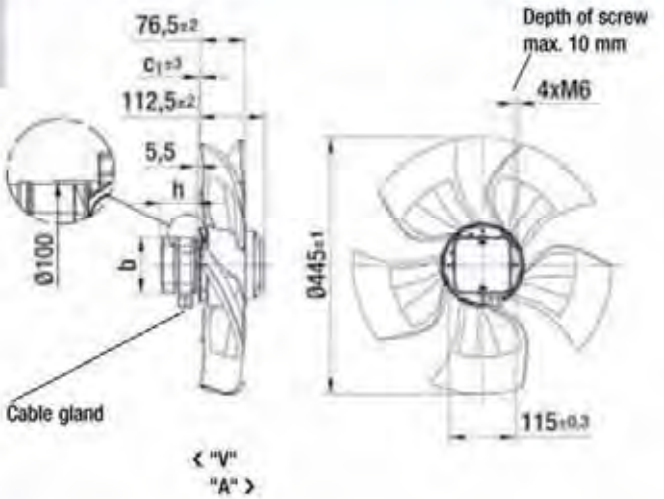


| Type | | b | $c_1$ | h |
|---|---|---|---|---|
| A4D 450-AU01 -01 | "V" | Ø 89 | 6.0 | 33.5 |
| A4D 450-AU01 -02 | "A" | Ø 89 | 20.0 | 33.5 |
| A4E 450-AU03 -01 | "V" | 99x99 | 6.0 | 59.5 |
| A4E 450-AU03 -02 | "A" | 99x99 | 20.0 | 59.5 |

## With full round nozzle

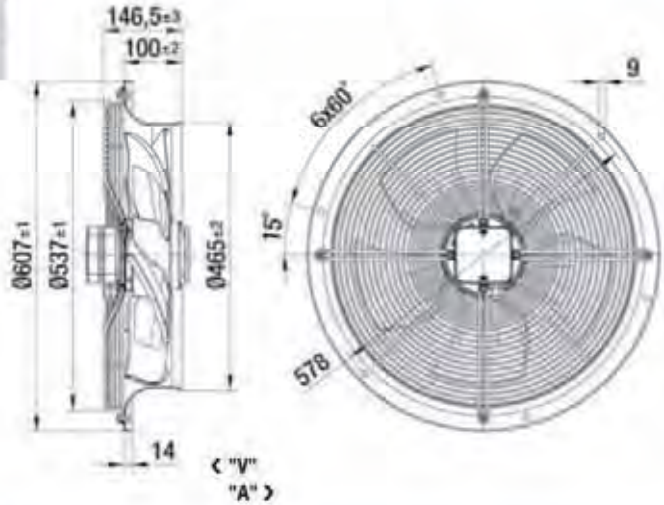


| Type | |
|---|---|
| W4D 450-CU01 -01 | "V" |
| W4D 450-CU01 -02 | "A" |
| W4E 450-CU03 -01 | "V" |
| W4E 450-CU03 -02 | "A" |

## With guard grille for full nozzle

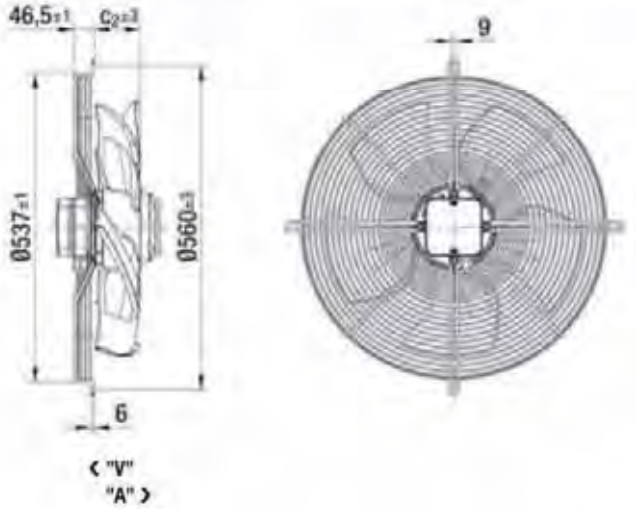


| Type | | $c_2$ |
|---|---|---|
| S4D 450-BU01 -01 | "V" | 60.5 |
| S4D 450-BU01 -02 | "A" | 74.5 |
| S4E 450-BU03 -01 | "V" | 60.5 |
| S4E 450-BU03 -02 | "A" | 74.5 |

## With guard grille for short nozzle

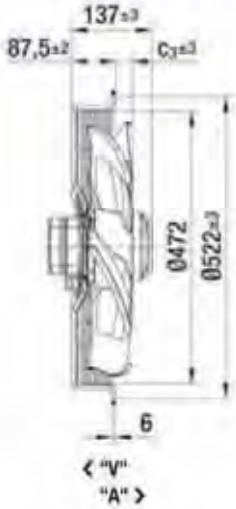

| Type | | $c_3$ |
|---|---|---|
| S4D 450-AU01 -01 | "V" | 19.5 |
| S4D 450-AU01 -02 | "A" | 33.5 |
| S4E 450-AU03 -01 | "V" | 19.5 |
| S4E 450-AU03 -02 | "A" | 33.5 |

# AC axial fans

S series, Ø 450

- **Material:** Guard grille: Steel, phosphated and coated in black plastic
  Wall ring: Sheet steel, pre-galvanised and coated in black plastic
  Blades: Sheet steel, coated in black
  Rotor: Coated in black
- **Number of blades:** 5
- **Direction of rotation:** Direction of air flow "V" counter-clockwise, direction of air flow "A" counter-clockwise, seen on rotor
- **Type of protection:** IP 54 (acc. to EN 60529)
- **Insulation class:** "F"
- **Mounting position:** Shaft horizontal or rotor on bottom; rotor on top on request
- **Condensate discharges:** Rotor-side
- **Mode of operation:** Continuous operation (S1)
- **Bearings:** Maintenance-free ball bearings

| Nominal data | | Curve | Nominal voltage | Frequency | Speed/rpm (1) | Max. power input (1) | Max. current draw (1) | Capacitor | Max. operative range | Perm. amb. temp. | Mass without attachments | Electr. connection |
|---|---|---|---|---|---|---|---|---|---|---|---|---|
| Type | Motor | | VAC | Hz | rpm | W | A | µF/VDB | Pa | °C | kg | p. 416 f. |
| *4D 450 | M4D 094-HA | Ⓐ | 3~ 400 Δ | 50 | 1330 | 585 | 1.10 | — | 200 | -40 to +70 | 7.9 | F1b)/F2b) |
| | | Ⓑ | 3~ 400 Y | 50 | 1000 | 390 | 0.67 | — | 110 | -40 to +70 | | |
| | | Ⓒ | 3~ 400 Δ | 60 | 1540 | 660 | 1.16 | — | 110 | -40 to +50 | 7.9 | F1b)/F2b) |
| | | Ⓓ | 3~ 400 Y | 60 | 1060 | 400 | 0.70 | — | 55 | -40 to +50 | | |
| *4E 450 | M4E 094-HA | Ⓔ | 1~ 230 | 50 | 1350 | 480 | 2.10 | 10.0/400 | 125 | -40 to +65 | 7.9 | A2b) |
| | | | 1~ 230 | 60 | 1490 | 665 | 2.90 | 10.0/400 | 115 | -40 to +50 | | |

subject to alterations

(1) Nominal data in operating point with maximum load

## Curves

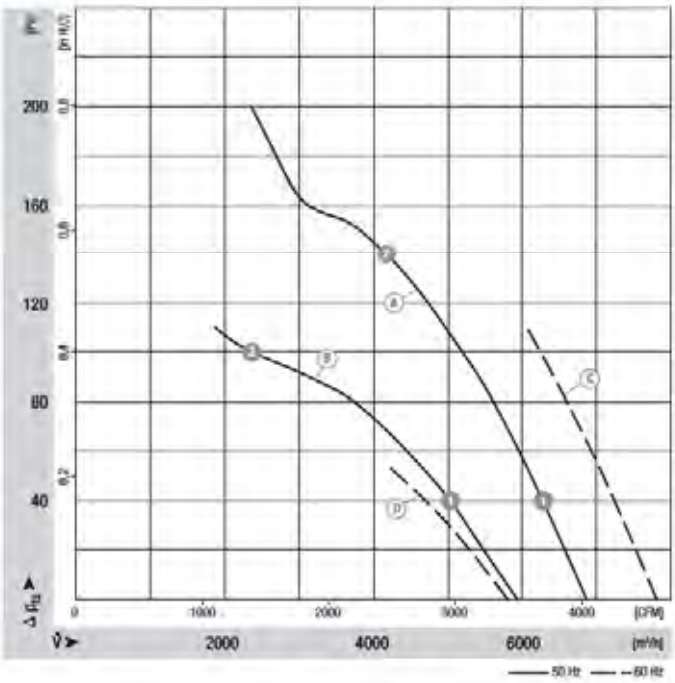


| | n [rpm] | $P_1$ [W] | I [A] | $Lp_A$ [dB(A)] |
|---|---|---|---|---|
| Ⓐ ❶ | 1400 | 392 | 0.89 | 72 |
| Ⓐ ❷ | 1370 | 476 | 0.98 | 70 |
| Ⓑ ❶ | 1170 | 303 | 0.53 | 68 |
| Ⓑ ❷ | 1030 | 375 | 0.63 | 66 |



ebmpapst

- **Motor protection:** Design with thermal overload protector
- **Cable exit:** Lateral via terminal box
- **Protection class:** I (acc. to EN 61800-5-1)
- **Product conforming to standard:** CE

| Direction of air flow | < "V"/"A" > Without attachments | < "V"/"A" > With full round nozzle | < "V"/"A" > With guard grille for full nozzle | < "V"/"A" > With guard grille for short nozzle | < "V" In-line duct fan |
|---|---|---|---|---|---|
| "V" | A4D 450-BA14 -01 | W4D 450-GA14 -01 | S4D 450-HA14 -01 | S4D 450-GA14 -01 | — |
| "A" | A4D 450-BA14 -02 | W4D 450-GA14 -02 | S4D 450-HA14 -02 | S4D 450-GA14 -02 | — |
| "V" | A4E 450-BA09 -01 | W4E 450-GA09 -01 | S4E 450-HA09 -01 | S4E 450-GA09 -01 | — |
| "A" | A4E 450-BA09 -02 | W4E 450-GA09 -02 | S4E 450-HA09 -02 | S4E 450-GA09 -02 | — |

## Curves

| | n [rpm] | $P_1$ [W] | I [A] | $Lp_A$ [dB(A)] |
|---|---|---|---|---|
| ① ❶ | 1380 | 413 | 2.01 | 72 |
| ② ❸ | 1380 | 460 | 2.20 | 70 |

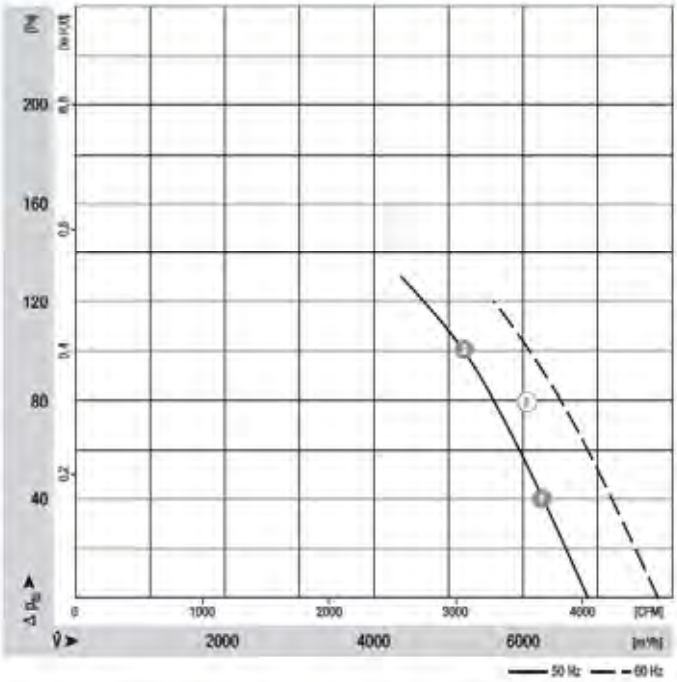

# AC axial fans

S series, Ø 450

- **Material:** Guard grille: Steel, phosphated and coated in black plastic
  Wall ring: Sheet steel, pre-galvanised and coated in black plastic
  Blades: Sheet aluminium
  Rotor: Encased in aluminium
- **Number of blades:** 5
- **Direction of rotation:** Counter-clockwise, seen on rotor
- **Type of protection:** IP 54 (acc. to EN 60529)
- **Insulation class:** "F"
- **Mounting position:** Any
- **Condensate discharge holes:** On rotor and stator side
- **Mode of operation:** Continuous operation (S1)
- **Bearings:** Maintenance-free ball bearings

| Nominal data | | Blade angle | Curve | Nominal voltage | Frequency | Speed/rpm (1) | Max. power input (1) | Max. current draw (1) | Capacitor | Max. operative range | Perm. amb. temp. | Mass of in-line duct fan | Electr. connection |
|---|---|---|---|---|---|---|---|---|---|---|---|---|---|
| Type | Motor | | | VAC | Hz | rpm | W | A | µF/VDB | Pa | °C | kg | p. 416 f. |
| *4D 450 | M4D 110-EF | 0° | Ⓐ | 3~ 400 Δ | 50 | 1350 | 490 | 1.00 | — | 115 | -40 to +95 | 14.5 | F1b)/F2b) |
| | | | Ⓑ | 3~ 400 Y | 50 | 1075 | 340 | 0.58 | — | 75 | -40 to +95 | | |
| *4E 450 | M4E 110-EF | 0° | Ⓒ | 1~ 230 | 50 | 1330 | 500 | 2.20 | 10.0/400 | 100 | -40 to +80 | 14.5 | A2b) |

subject to alterations

(1) Nominal data in operating point with maximum load

## Curves

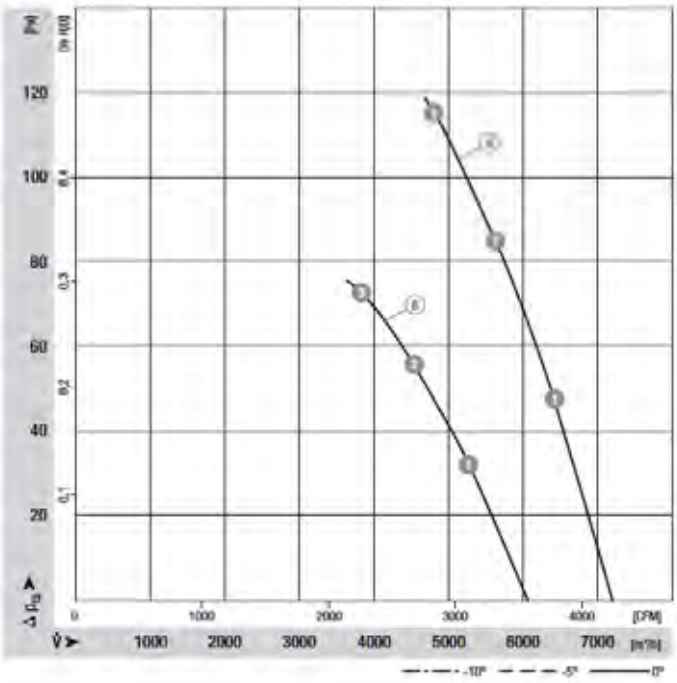


| | n [rpm] | $P_1$ [W] | I [A] | $LW_A$ [dB(A)] |
|---|---|---|---|---|
| Ⓐ ❶ | 1370 | 450 | 0.97 | 78 |
| Ⓐ ❷ | 1360 | 470 | 0.99 | 77 |
| Ⓐ ❸ | 1350 | 490 | 1.00 | 79 |
| Ⓑ ❶ | 1120 | 320 | 0.56 | 71 |
| Ⓑ ❷ | 1090 | 330 | 0.57 | 73 |
| Ⓑ ❸ | 1075 | 340 | 0.58 | 75 |



ebmpapst

- **Motor protection:** Design with thermal overload protector
- **Cable exit:** Via terminal box
- **Protection class:** I (acc. to EN 61800-5-1)
- **Product conforming to standard:** CE
- **Approvals:** VDE (acc. to EN 60034)

| Direction of air flow | | | | | |
|---|---|---|---|---|---|
| | ❮ "V"/"A" ❯ | ❮ "V"/"A" ❯ | ❮ "V"/"A" ❯ | ❮ "V"/"A" ❯ | ❮ "V" |
| | Without attachments | With full round nozzle | With guard grille for full nozzle | With guard grille for short nozzle | In-line duct fan |
| "V" | — | — | — | — | W4D 450-IG01 -01 |
| "A" | — | — | — | — | — |
| "V" | — | — | — | — | W4E 450-IG01 -01 |
| "A" | — | — | — | — | — |

## Curves

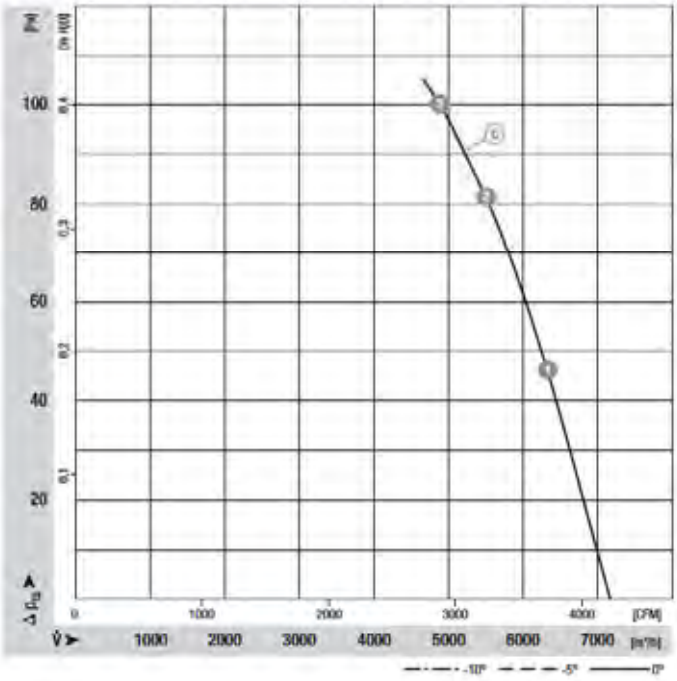


| | n [rpm] | $P_1$ [W] | I [A] | $LW_A$ [dB(A)] |
|---|---|---|---|---|
| ⓒ ❶ | 1360 | 460 | 2.00 | 78 |
| ⓒ ❷ | 1340 | 480 | 2.10 | 77 |
| ⓒ ❸ | 1330 | 500 | 2.20 | 78 |




Drawings p. 73
Capacitor p. 382 f.
Electr. connections p. 416 f.

# AC axial fans

S series, Ø 450, drawings of directions of air flow "V" and "A"

## Without attachments

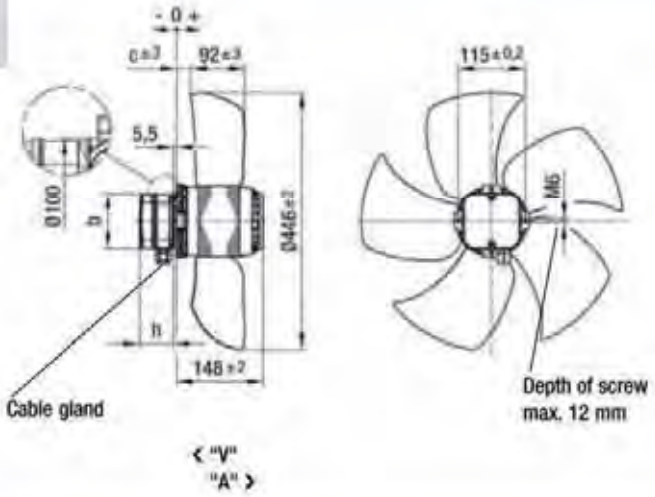


| Type | | b | c | h |
|---|---|---|---|---|
| A4D 450-BA14 -01 | "V" | Ø 89 | 35.0 | 33.5 |
| A4D 450-BA14 -02 | "A" | Ø 89 | 36.7 | 33.5 |
| A4E 450-BA09 -01 | "V" | 99x99 | 35.0 | 59.5 |
| A4E 450-BA09 -02 | "A" | 99x99 | 36.7 | 59.5 |

## With full round nozzle

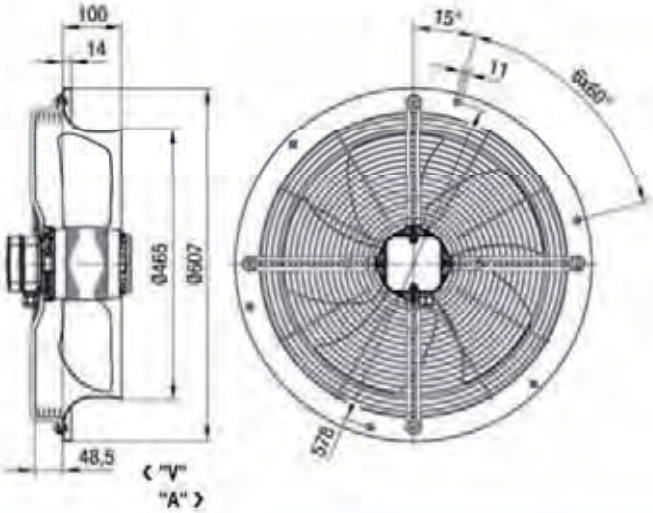


| Type | |
|---|---|
| W4D 450-GA14 -01 | "V" |
| W4D 450-GA14 -02 | "A" |
| W4E 450-GA09 -01 | "V" |
| W4E 450-GA09 -02 | "A" |

## With guard grille for full nozzle

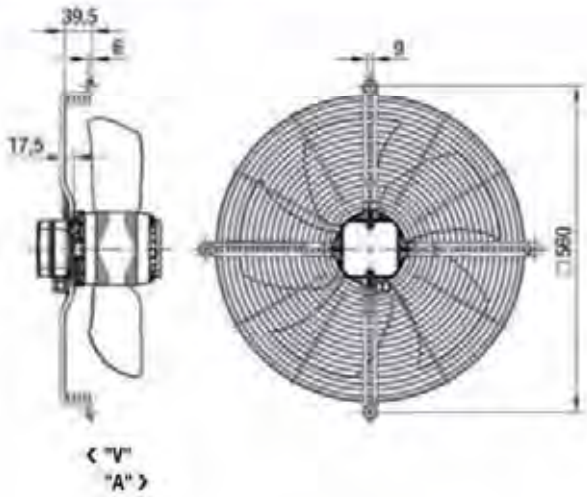


| Type | |
|---|---|
| S4D 450-HA14 -01 | "V" |
| S4D 450-HA14 -02 | "A" |
| S4E 450-HA09 -01 | "V" |
| S4E 450-HA09 -02 | "A" |

## With guard grille for short nozzle

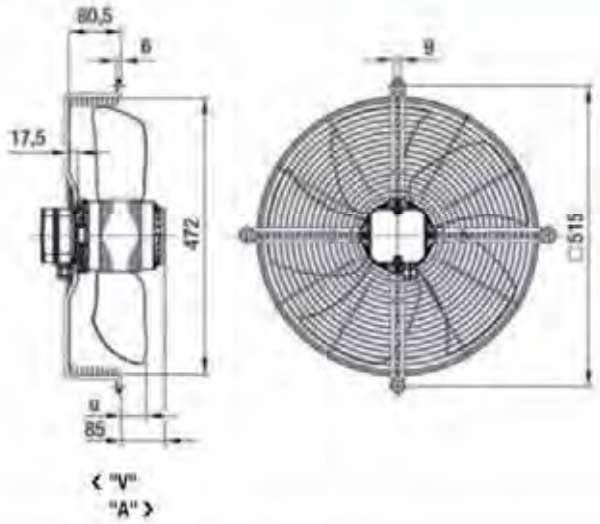


| Type | | u |
|---|---|---|
| S4D 450-GA14 -01 | "V" | 64.0 |
| S4D 450-GA14 -02 | "A" | 65.7 |
| S4E 450-GA09 -01 | "V" | 64.0 |
| S4E 450-GA09 -02 | "A" | 65.7 |

## In-line duct fan

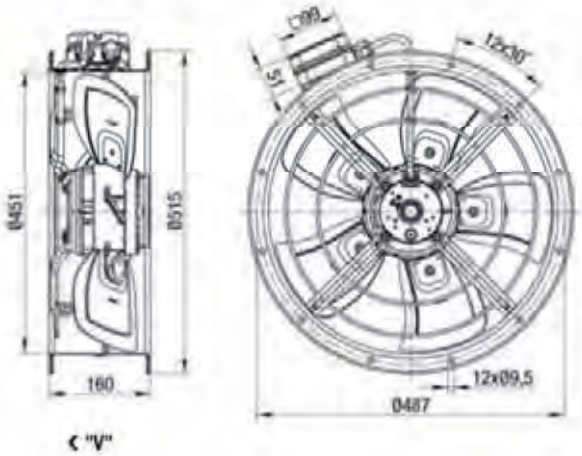


| Type | |
|---|---|
| W4D 450-IG01 -01 | "V" |
| W4E 450-IG01 -01 | "V" |