## SPECIFIC N°: OD071B2W2305P4

| | | | |
|---|---|---|---|
| MOTOR PART NR | OD071B2W2305P4 | CUSTOMER PART NR | |
| DRAWING NR | OD071B2W2305P4 | MOTOR TYPE | OD071B22305P4 |
| Type of winding | 3 PHASE 1 SPEED | | |
| PROTECTION | II 2G Ex d IIC T4 Gb | CERTIFICATE | EUM1 10 ATEX 0350 |
| IP PROTECTION | IP66 | ENVIRONMENT CONDITIONS | -20 /+50℃ Max Altitude: 1000m |
| POLES | 2 | NOMINAL POWER kW | 0.55<br>0.66 |
| Nom. Speed rpm | 2840<br>3410 | Voltage-Frequency | 230/400V 50Hz<br>265/460V 60Hz<br>Tolerance: Voltage ±5% |
| Nom. Current A | 2.51/1.45<br>2.51/1.45 | COS ϕ | 0.78<br>0.78 |
| Duty | S1 Continuous Duty | Direction of Rotation | BIDIRECTIONAL |
| Insulation Class | F | Mounting IM | B34 |
| IEC Frame Size | 71 | Material end Shield/Flange | Aluminium |
| Material Terminal Box | Aluminium | Material Fan | PLASTIC Nylon V6 |
| Material Cover Fan | Zinc plated steel | Material shaft | Steel C43 |
| DE Bearing Type | 6202-ZZ | NDE Bearing Type | 6202-ZZ |
| Position of terminal box | TOP | Cable gland Type | M20x1,5 |
| Cable gland position (view from DE) | Right | Thermal protection | - |
| Painting | - | Motor Colour | Not painted motor |
| Run capacitor µF | - | Start capacitor | - |

*In compliance with the EC Directives*

94/9/EC (ATEX)
2004/108/EC (EMC)
2006/42/EC (Machinery)
2011/65/CE (RoHS)

*and comply with the following Standards*

EN 60079-0,
EN 60079-1,
EN 60034-1,2,5,6,7,9,12,14,
IEC60072-1,
EN 60259
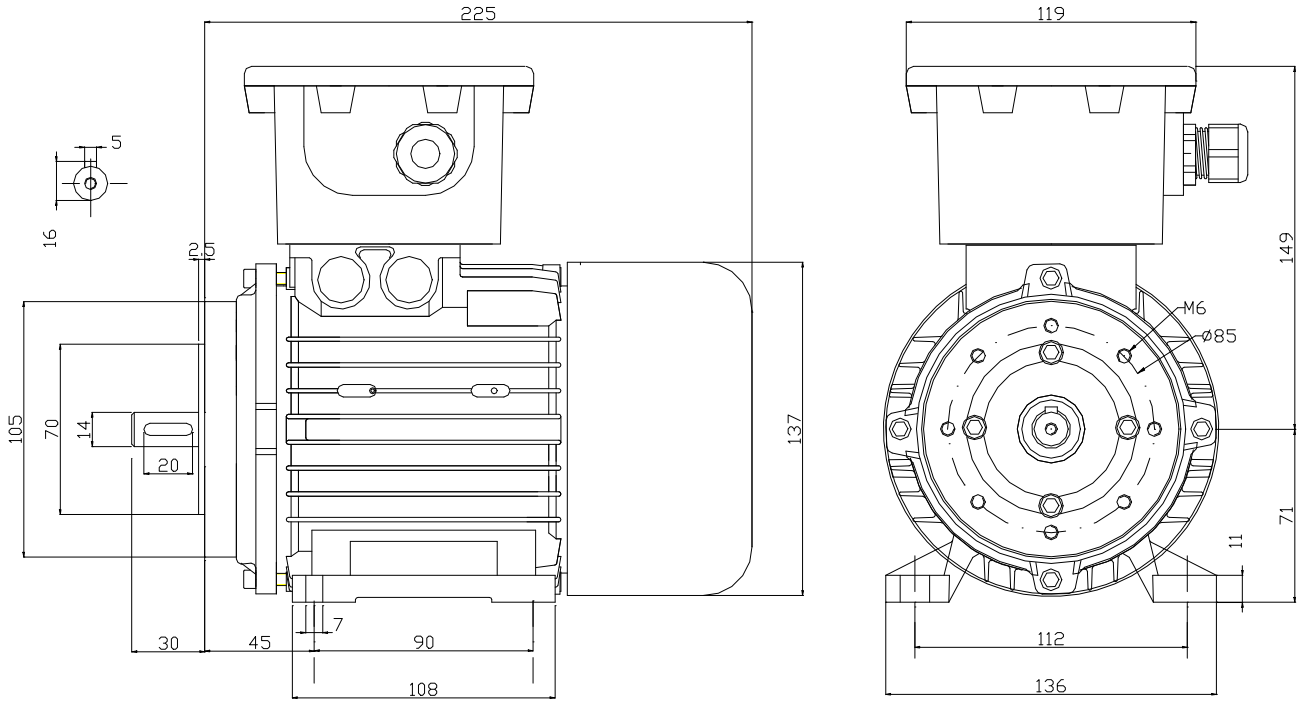
### Overall dimensions