SPECIFIC N°: OD080A4X2305P4

MOTOR PART NR	OD080A4X2305P4	CUSTOMER PART NR	-	
DRAWING NR	OD080A4X2305P4	MOTOR TYPE	OD080A42305P4	
Type of winding	3 PHASE 1 SPEED			
PROTECTION	II 2G Ex d IIC T54 Gb	CERTIFICATE	EUM1 10 ATEX 0350	
IP PROTECTION	IP66	ENVIRONMENT CONDITIONS	-20 /+50℃ Max Altitude: 1000m	
POLES	4	NOMINAL POWER kW	0.55 0.66	
Nom. Speed rpm	1390 1670	Voltage-Frequency	230/400V 50Hz 265/460V 60Hz	Tolerance: Voltage ±5%
Nom. Current A	3/1.75 3/1.75	COS ϕ	0,71 0,71	
Duty	S1 Continuous Duty	Direction of Rotation	BIDIRECTIONAL	
Insulation Class	F	Mounting IM	B35	
IEC Frame Size	80	Material end Shield/Flange	Aluminium	
Material Terminal Box	Aluminium	Material Fan	Plastic nylon V6	
Material Cover Fan	Zinc plated steel	Material shaft	Steel C43	
DE Bearing Type	6204-ZZ	NDE Bearing Type	6204-ZZ	
Position of terminal box	TOP	Cable gland Type	N.1 M20x1,5	
Cable gland position (view from DE)	Right	Thermal protection	-	
Painting	-	Motor Colour	Not painted motor	
Run capacitor µF	-	Start capacitor	-	

In compliance with the EC Directives

94/9/EC (ATEX)
2004/108/EC (EMC)
2006/42/EC (Machinery)
2011/65/CE (RoHS)

and comply with the following Standards

EN 60079-0,
EN 60079-1,
EN 60034-1,2,5,6,7,9,12,14,
IEC60072-1,
EN 60259
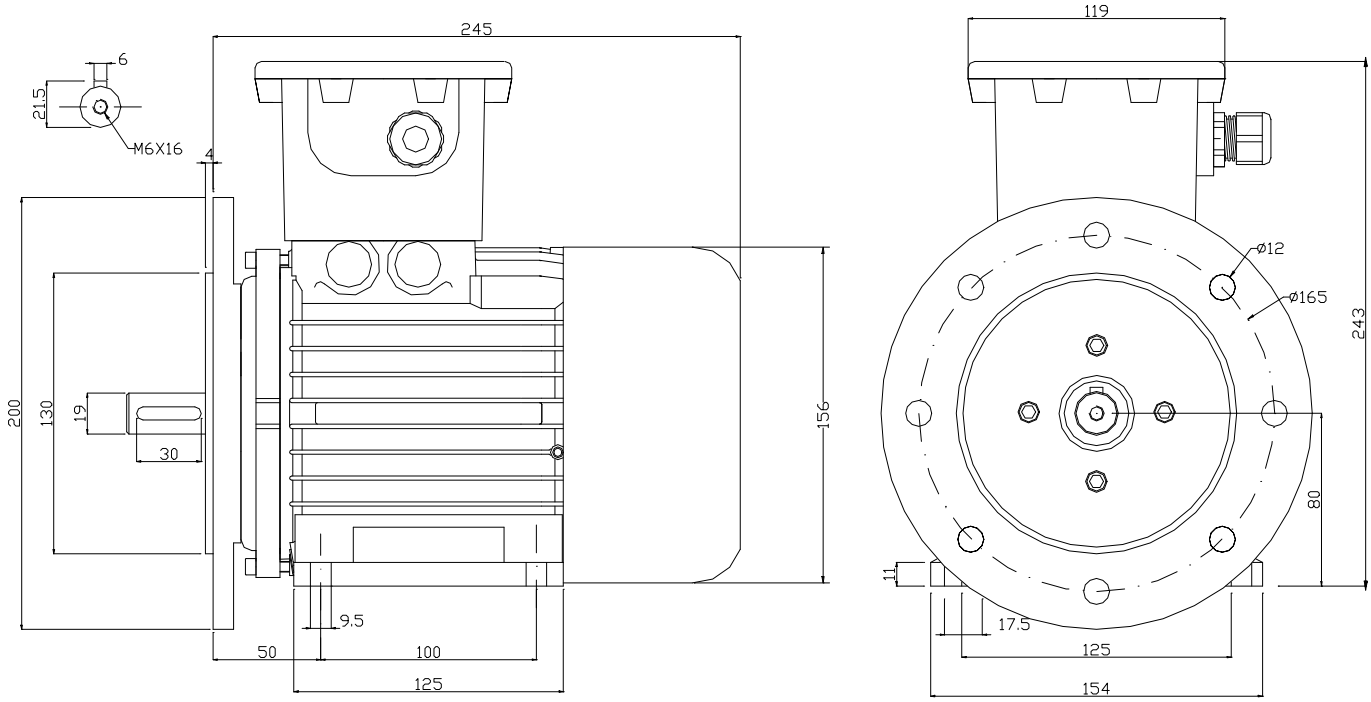
Overall dimensions