SPECIFIC Nº: OD100K4H2305P4

MOTOR PART NR	OD100K4H2305P4	CUSTOMER PART NR	
DRAWING NR	OD100K4H2305P4	MOTOR TYPE	OD100K42305P4
Type of winding	3 PHASE SINGLE WINDING 6 LEADS		
PROTECTION	II 2G Ex d IIC T4 Gb	CERTIFICATE	EUM1 10 ATEX 0350
IP PROTECTION	IP66	ENVIRONMENT CONDITIONS	-20 /+50℃ Max Altitude: 1000m
POLES	4	NOMINAL POWER kW	2,2 2,6
Nom. Speed rpm	1420 1700	Voltage-Frequency	230/400V 50Hz 265/460V 60Hz Tolerance: Voltage ±5%
Nom. Current A	9.5/5.5 9.5/5.5	COS ϕ	0.78 0.78
Duty	S1 Continuous Duty	Direction of Rotation	BIDIRECTIONAL
Insulation Class	F	Mounting IM	B3
IEC Frame Size	100	Material end Shield/Flange	Aluminium
Material Terminal Box	Aluminium	Material Fan	PLASTIC Nylon V6
Material Cover Fan	Zinc plated steel	Material shaft	Steel C43
DE Bearing Type	6206-ZZ	NDE Bearing Type	6206-ZZ
Position of terminal box	TOP	Cable gland Type	1XM20
Cable gland position (view from DE)	Right	Thermal protection	
Painting	-	Motor Colour	Not painted motor
Special	-		

In compliance with the EC Directives

94/9/EC (ATEX)
2004/108/EC (EMC)
2006/42/EC (Machinery)
2011/65/CE (RoHS)

and comply with the following Standards

EN 60079-0, 1
EN 60034-1,2,5,6,7,9,12,14,
IEC60072-1,
EN 60259
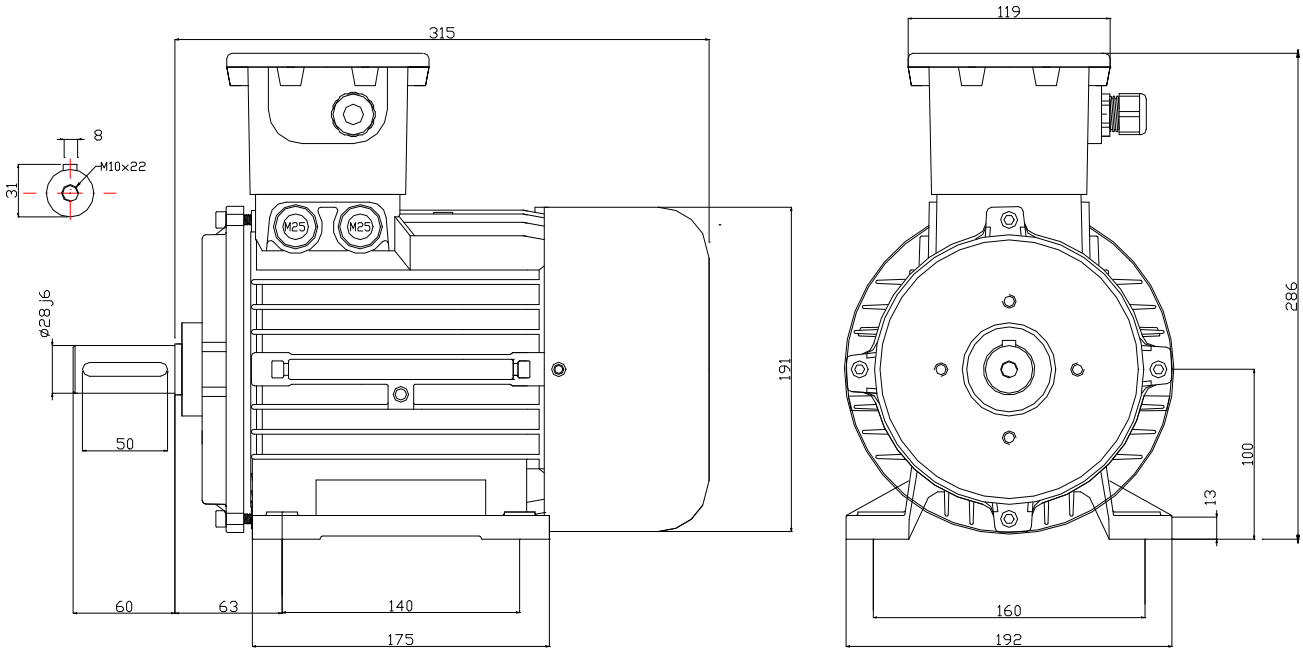
Overall dimensions