max. 95 m³/h

DC centrifugal fans and blowers

Ø 85 mm

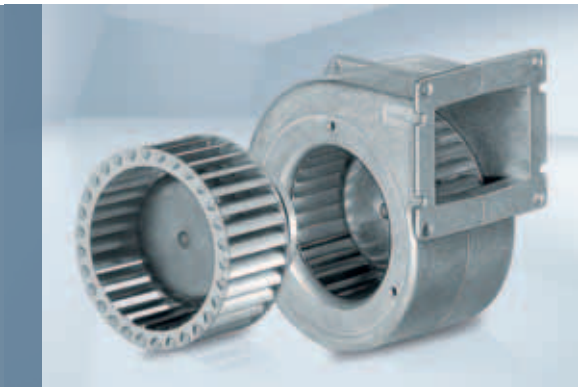

- **Material:** Housing: Die-cast aluminium
  Impeller: Hot-dip galvanised sheet steel
  Rotor: Galvanised
- **Direction of rotation:** Clockwise, seen on rotor
- **Type of protection:** IP 22
- **Insulation class:** "B"
- **Mounting position:** Any
- **Condensate discharges:** None
- **Operation mode:** Continuous operation (S1)
- **Bearings:** Maintenance-free ball bearings

Nominal data		Curve	Nominal voltage	Voltage range	Air flow	Speed / rpm	Input power	Current draw	Sound power level	Min. back-pressure	Perm. amb. temp.	Technical features and electrical connections
Type	**Motor**		**VDC**	**VDC**	**m³/h**	**rpm**	**W**	**A**	**dB(A)**	**Pa**	**°C**	
***1G 085**	M1G 045-BE	A	24	16-28	95	2850	14	0,64	57	0	-25...+60	p. 255 / G)
***1G 085**	M1G 045-BE	A	48	36-57	95	2850	14	0,32	57	0	-25...+60	p. 255 / G)

Subject to alternations

Curve:

U_N = nominal voltage (24 V /48 V)

U_R = overvoltage (28 V / 57 V)

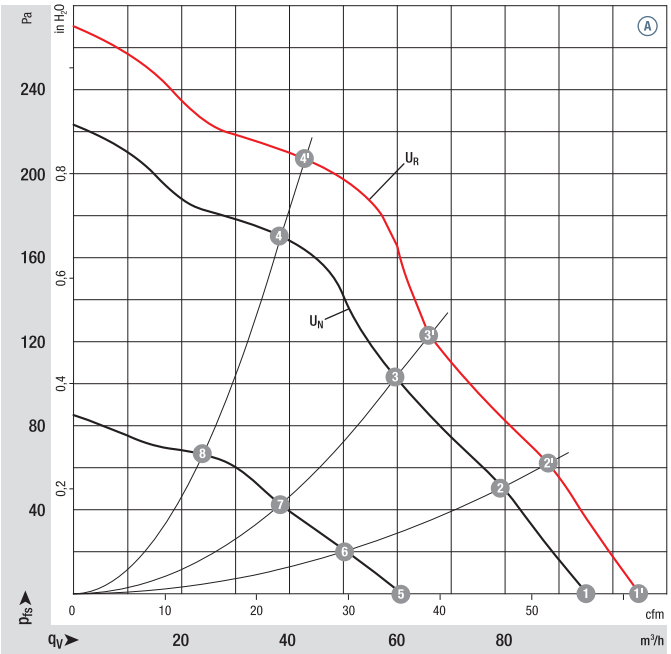

	n rpm	P_{ed} W	Lp_A dB(A)	η_{tL} %
A 1'	3180	19	59	—
A 2'	3300	16	57	28
A 3'	3500	15	57	32
A 4'	3800	12	57	37
A 1	2850	14	57	—
A 2	3000	12	55	28
A 3	3180	11	55	32
A 4	3400	9	54	37
A 5	1890	5	46	—
A 6	1970	4	44	25
A 7	2070	4	44	30
A 8	2170	3	42	33

Air performance measured as per: ISO 5801, Installation category A, with ebm-papst inlet nozzle without protection against accidental contact. Suction-side noise levels: LWA as per ISO 13347, LpA measured at 1 m distance to fan axis. The acoustic values given are only valid under the measurment conditions listed and may vary depending on the installation situation. With any deviation to the standard setup, the specific values have to be checked and reviewed once installed or fitted!
For detailed information see http://www.ebmpapst.com/general conditions

ebmpapst

- **Technical features:** See electrical connections p. 255
- **Cable exit:** Axial
- **Protection class:** I
- **Product conforming to standards:** EN 60950-1
- **Approvals:** Ⓐ (48 VDC) CCC

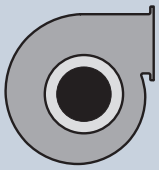

Centrifugal fans	Mass centrifugal fans kg	Centrifugal blowers with flange	Mass centrifugal blowers kg
R1G 085-AB05 -01	0,5	**G1G 085-AB05 -01**	0,8
R1G 085-AB07 -01	0,5	**G1G 085-AB07 -01**	0,8

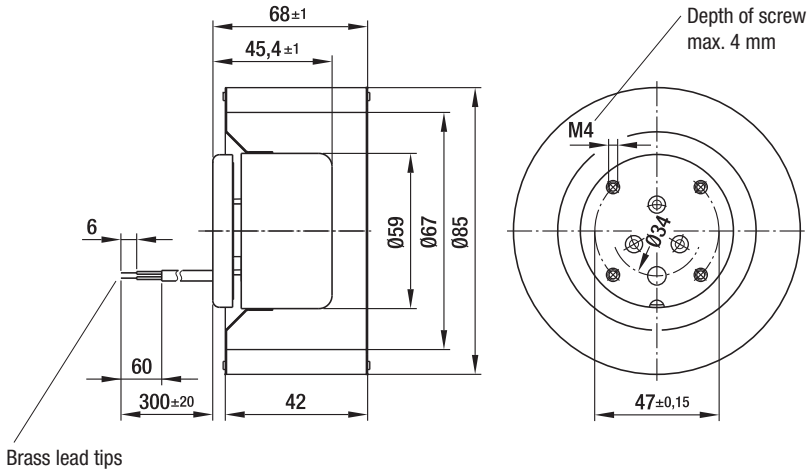

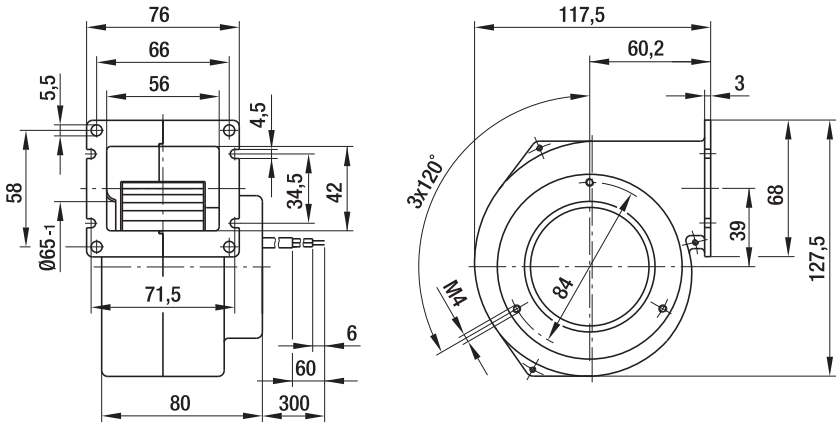

max. 95 m³/h

DC centrifugal fans and blowers

Ø 97 mm

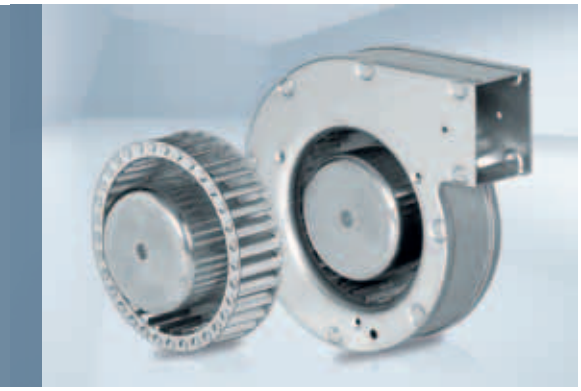

- **Material:** Housing: Hot-dip galvanised sheet steel
  Impeller: Hot-dip galvanised sheet steel
  Rotor: Galvanised
- **Direction of rotation:** Clockwise, seen on rotor
- **Type of protection:** IP 22
- **Insulation class:** "B"
- **Mounting position:** Any
- **Condensate discharges:** None
- **Operation mode:** Continuous operation (S1)
- **Bearings:** Maintenance-free ball bearings

Nominal data		Curve	Nominal voltage	Voltage range	Air flow	Speed / rpm	Input power	Current draw	Sound power level	Min. back-pressure	Perm. amb. temp.	Technical features and electrical connections
Type	**Motor**		**VDC**	**VDC**	**m³/h**	**rpm**	**W**	**A**	**dB(A)**	**Pa**	**°C**	
***1G 097**	M1G 045-BE	A	24	16-28	95	2650	16	0,75	59	0	-25...+60	p. 255 / G)
***1G 097**	M1G 045-BE	A	48	36-57	95	2650	16	0,38	59	0	-25...+60	p. 255 / G)

Subject to alternations

Curve:

U_N = nominal voltage (24 V /48 V)

U_R = overvoltage (28 V / 57 V)

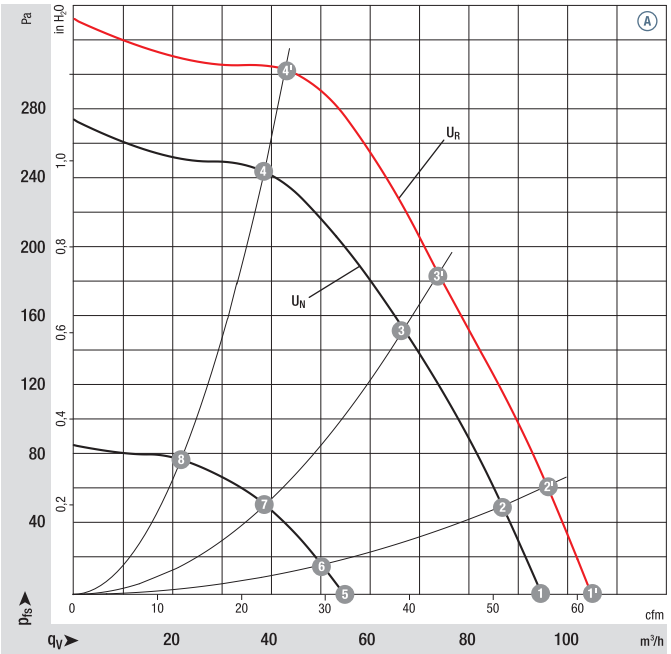

		n rpm	P_{ed} W	Lp_A dB(A)	η_{tL} %
A	1'	2920	22	62	—
A	2'	3030	21	61	41
A	3'	3300	17	59	48
A	4'	3700	13	58	48
A	1	2650	16	59	—
A	2	2730	15	58	41
A	3	2960	13	56	48
A	4	3290	10	55	48
A	5	1615	4	45	—
A	6	1650	4	45	38
A	7	1745	4	43	46
A	8	1880	3	42	47

Air performance measured as per: ISO 5801, Installation category A, with ebm-papst inlet nozzle without protection against accidental contact. Suction-side noise levels: LWA as per ISO 13347, LpA measured at 1 m distance to fan axis. The acoustic values given are only valid under the measurment conditions listed and may vary depending on the installation situation. With any deviation to the standard setup, the specific values have to be checked and reviewed once installed or fitted!
For detailed information see http://www.ebmpapst.com/general conditions

ebmpapst

- **Technical features:** See electrical connections p. 255
- **Cable exit:** Axial
- **Protection class:** I
- **Product conforming to standards:** EN 60950-1
- **Approvals:** Ⓐ (48 VDC) CCC

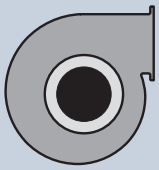

Centrifugal fans	Mass centrifugal fans kg	Centrifugal blowers with flange	Mass centrifugal blowers kg
R1G 097-AA05 -01	0,5	**G1G 097-AA05 -01**	0,8
R1G 097-AA07 -01	0,5	**G1G 097-AA07 -01**	0,8

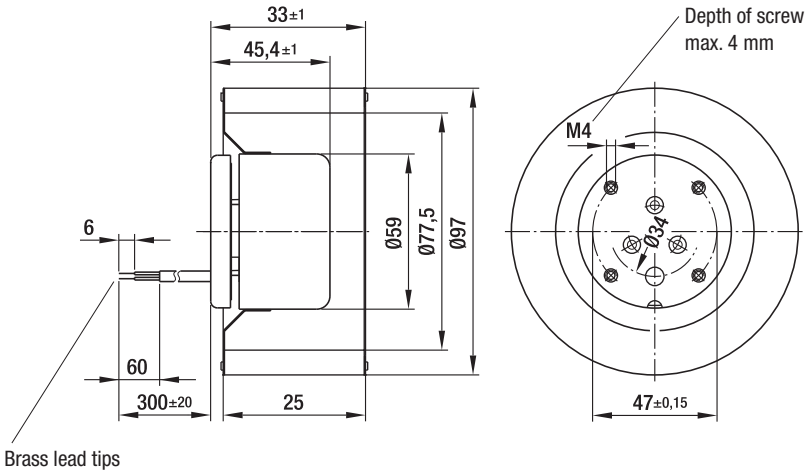

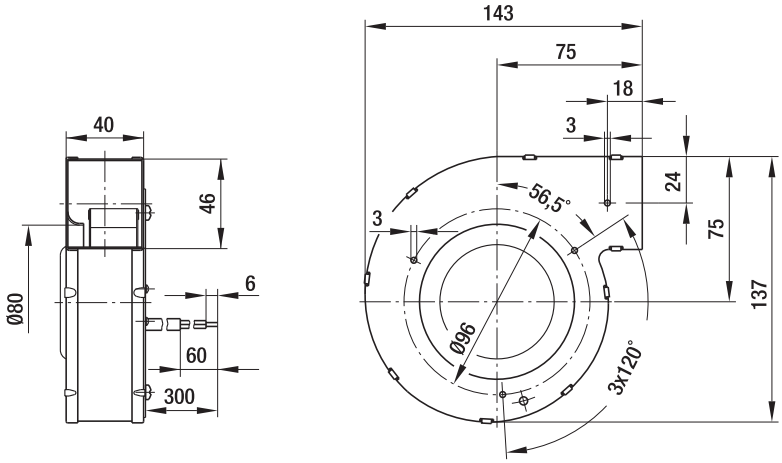

max. 200 m³/h

DC centrifugal fans and blowers

Ø 108 mm

- **Material:** Housing: Die-cast aluminium
  Impeller: Hot-dip galvanised sheet steel
  Rotor: Galvanised
- **Direction of rotation:** Clockwise, seen on rotor
- **Type of protection:** IP 22
- **Insulation class:** "B"
- **Mounting position:** Any
- **Condensate discharges:** None
- **Operation mode:** Continuous operation (S1)
- **Bearings:** Maintenance-free ball bearings

Nominal data		Curve	Nominal voltage	Voltage range	Air flow	Speed / rpm	Input power	Current draw	Sound power level	Min. back-pressure	Perm. amb. temp.	Technical features and electrical connections
Type	**Motor**		**VDC**	**VDC**	**m³/h**	**rpm**	**W**	**A**	**dB(A)**	**Pa**	**°C**	
***1G 108**	M1G 055-BD	A	24	16-28	200	3000	42	2,00	65	0	-25...+60	p. 255 / G)
***1G 108**	M1G 055-BD	A	48	36-57	200	3000	42	1,00	65	0	-25...+60	p. 255 / G)

Subject to alternations

Curve:

U_N = nominal voltage (24 V /48 V)

U_R = overvoltage (28 V / 57 V)

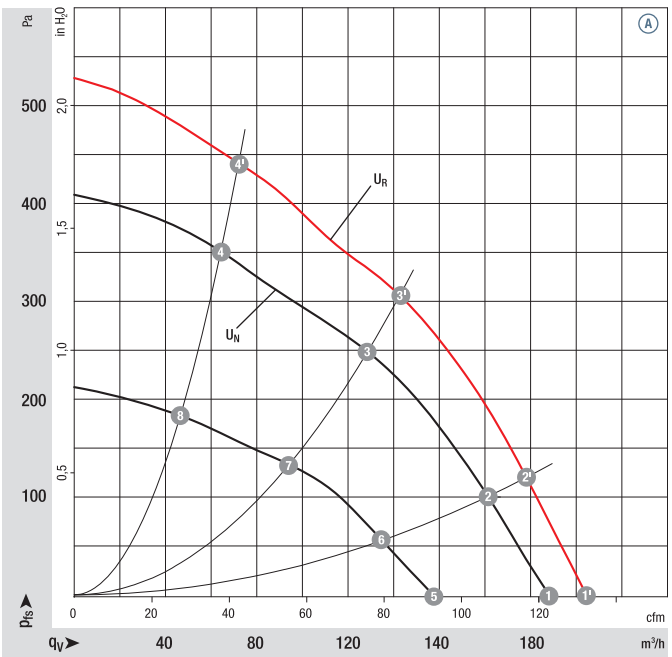

		n rpm	P_{ed} W	Lp_A dB(A)	η_{tL} %
A	1'	3230	55	67	—
A	2'	3410	52	66	33
A	3'	3800	43	65	41
A	4'	4100	35	64	33
A	1	3000	42	65	—
A	2	3140	40	64	33
A	3	3420	32	63	41
A	4	3690	26	63	33
A	5	2300	20	61	—
A	6	2380	17	58	33
A	7	2550	14	55	41
A	8	2720	11	55	33

Air performance measured as per: ISO 5801, Installation category A, with ebm-papst inlet nozzle without protection against accidental contact. Suction-side noise levels: LWA as per ISO 13347, LpA measured at 1 m distance to fan axis. The acoustic values given are only valid under the measurment conditions listed and may vary depending on the installation situation. With any deviation to the standard setup, the specific values have to be checked and reviewed once installed or fitted!
For detailed information see http://www.ebmpapst.com/general conditions

ebmpapst

- **Technical features:** See electrical connections p. 255
- **EMC:** Interference emission acc. to EN 61000-6-3
  Interference immunity acc. to EN 61000-6-2
- **Cable exit:** Axial
- **Protection class:** I
- **Product conforming to standards:** EN 60950-1
- **Approvals:** Ⓐ (24 VDC) UL, CSA, Ⓐ (48 VDC) CCC

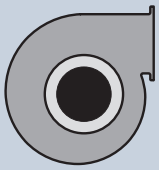

Centrifugal fans	Mass centrifugal fans kg	Centrifugal blowers with flange	Mass centrifugal blowers kg
R1G 108-AB17 -02	0,7	**G1G 108-AB17 -02**	1,4
R1G 108-AB41 -02	0,7	**G1G 108-AB41 -02**	1,4

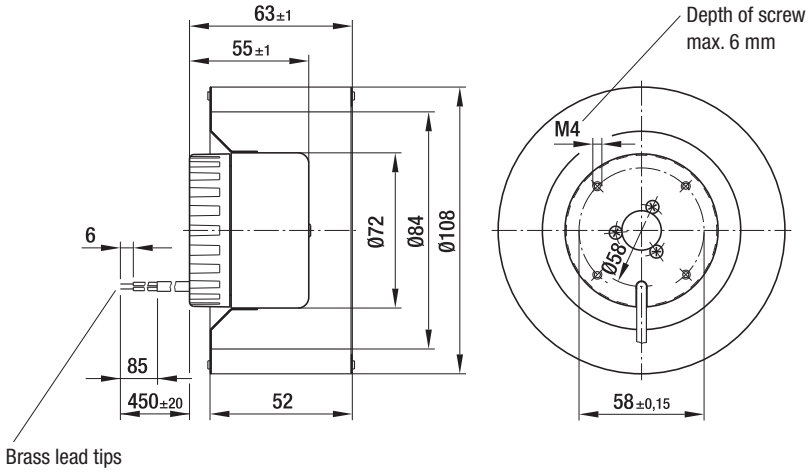

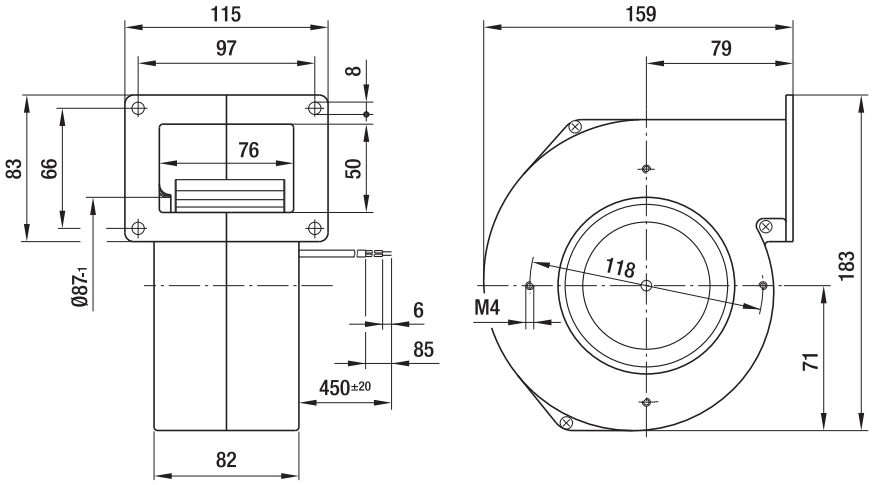

max. 255 m³/h

DC centrifugal fans and blowers

Ø 120 mm

- **Material:** Housing: Die-cast aluminium
  Impeller: Hot-dip galvanised sheet steel
  Rotor: Galvanised
- **Direction of rotation:** Clockwise, seen on rotor
- **Type of protection:** IP 22
- **Insulation class:** "B"
- **Mounting position:** Any
- **Condensate discharges:** None
- **Operation mode:** Continuous operation (S1)
- **Bearings:** Maintenance-free ball bearings

Nominal data		Curve	Nominal voltage	Voltage range	Air flow	Speed / rpm	Input power	Current draw	Sound power level	Min. back-pressure	Perm. amb. temp.	Technical features and electrical connections
Type	**Motor**		**VDC**	**VDC**	**m³/h**	**rpm**	**W**	**A**	**dB(A)**	**Pa**	**°C**	
***1G 120**	M1G 055-BD	A	24	16-28	255	2200	40	1,90	62	0	-25...+60	p. 255 / G)
***1G 120**	M1G 055-BD	A	48	36-57	255	2200	40	0,95	62	0	-25...+60	p. 255 / G)

Subject to alternations

Curve:

U_N = nominal voltage (24 V /48 V)

U_R = overvoltage (28 V / 57 V)

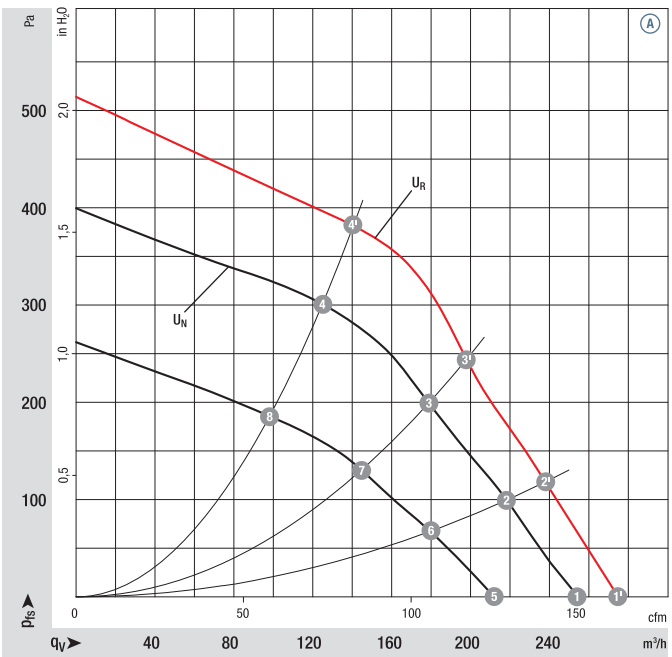

	n rpm	P_{ed} W	Lp_A dB(A)	η_{tL} %
A 1'	2410	50	63	—
A 2'	2620	47	62	58
A 3'	2870	44	61	60
A 4'	3200	36	62	55
A 1	2200	40	62	—
A 2	2410	36	60	59
A 3	2600	32	58	62
A 4	2880	25	58	55
A 5	1870	24	55	—
A 6	1990	21	54	58
A 7	2100	18	53	61
A 8	2310	14	54	54

Air performance measured as per: ISO 5801, Installation category A, with ebm-papst inlet nozzle without protection against accidental contact. Suction-side noise levels: LWA as per ISO 13347, LpA measured at 1 m distance to fan axis. The acoustic values given are only valid under the measurment conditions listed and may vary depending on the installation situation. With any deviation to the standard setup, the specific values have to be checked and reviewed once installed or fitted!
For detailed information see http://www.ebmpapst.com/general conditions

ebmpapst

- **Technical features:** See electrical connections p. 255
- **EMC:** Interference emission acc. to EN 61000-6-3
  Interference immunity acc. to EN 61000-6-2
- **Cable exit:** Axial
- **Protection class:** I
- **Product conforming to standards:** EN 60950-1
- **Approvals:** Ⓐ (24 VDC) UL, CSA, Ⓐ (48 VDC) CCC

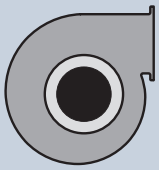

Centrifugal fans	Mass centrifugal fans kg	Centrifugal blowers with flange	Mass centrifugal blowers kg
R1G 120-AB67 -02	0,8	**G1G 120-AB67 -02**	1,6
R1G 120-AB71 -02	0,8	**G1G 120-AB71 -02**	1,6

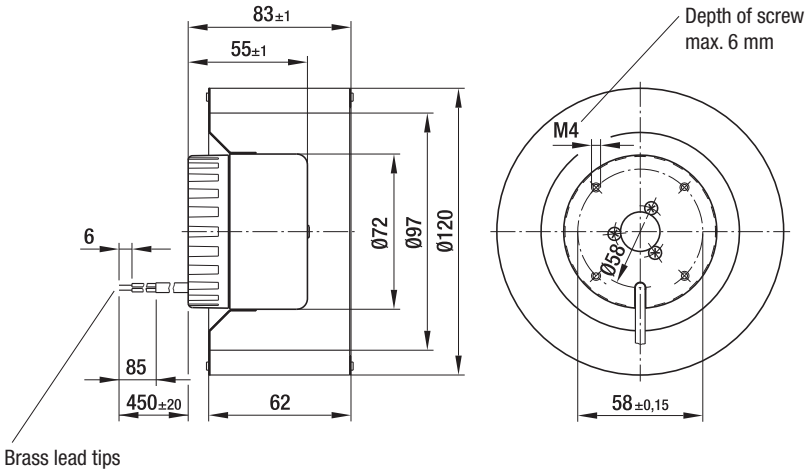

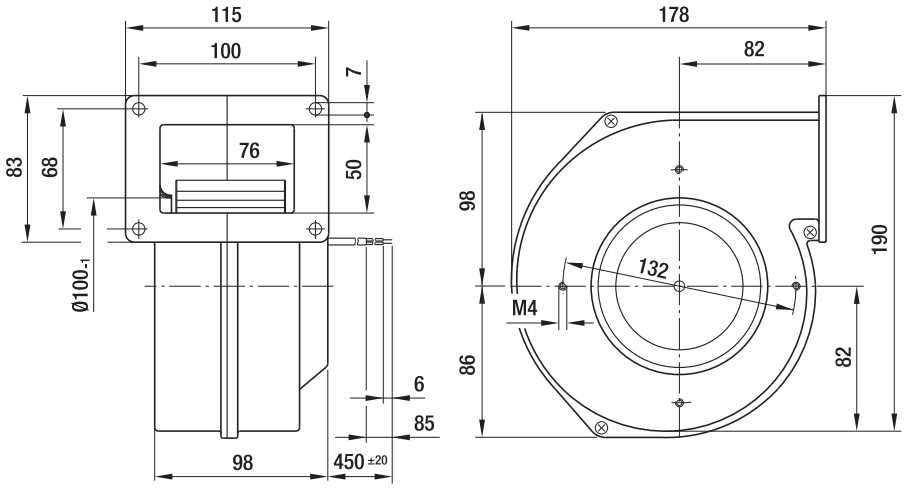

max. 225 m³/h

DC centrifugal fans and blowers

Ø 133 mm

- **Material:** Housing: Die-cast aluminium
  Impeller: Hot-dip galvanised sheet steel
  Rotor: Galvanised
- **Direction of rotation:** Clockwise, seen on rotor
- **Type of protection:** IP 22
- **Insulation class:** "B"
- **Mounting position:** Any
- **Condensate discharges:** None
- **Operation mode:** Continuous operation (S1)
- **Bearings:** Maintenance-free ball bearings

Nominal data		Curve	Nominal voltage	Voltage range	Air flow	Speed / rpm	Input power	Current draw	Sound power level	Min. back-pressure	Perm. amb. temp.	Technical features and electrical connections
Type	**Motor**		**VDC**	**VDC**	**m³/h**	**rpm**	**W**	**A**	**dB(A)**	**Pa**	**°C**	
***1G 133**	M1G 055-BD	A	24	16-28	225	2000	40	2,20	64	0	-25...+60	p. 255 / G)
***1G 133**	M1G 055-BD	A	48	36-57	225	2000	40	1,10	64	0	-25...+60	p. 255 / G)

Subject to alternations

Curve:

U_N = nominal voltage (24 V /48 V)

U_R = overvoltage (28 V / 57 V)

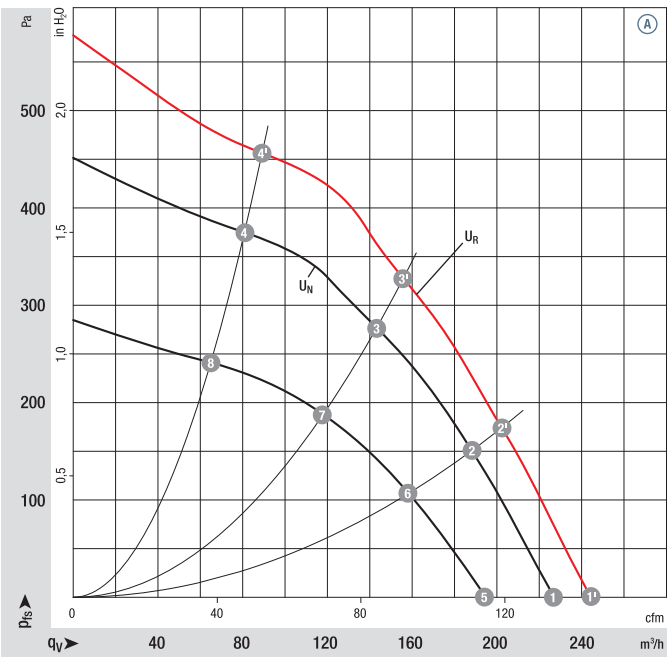

	n rpm	P_{ed} W	Lp_A dB(A)	η_{tL} %
A 1'	2170	57	66	—
A 2'	2410	51	66	47
A 3'	2750	44	64	49
A 4'	3200	36	66	32
A 1	2000	45	64	—
A 2	2230	40	64	49
A 3	2540	35	62	51
A 4	2920	27	63	33
A 5	1750	28	60	—
A 6	1910	24	59	50
A 7	2120	20	58	53
A 8	2370	15	59	35

Air performance measured as per: ISO 5801, Installation category A, with ebm-papst inlet nozzle without protection against accidental contact. Suction-side noise levels: LWA as per ISO 13347, LpA measured at 1 m distance to fan axis. The acoustic values given are only valid under the measurment conditions listed and may vary depending on the installation situation. With any deviation to the standard setup, the specific values have to be checked and reviewed once installed or fitted!
For detailed information see http://www.ebmpapst.com/general conditions

ebmpapst

- **Technical features:** See electrical connections p. 255
- **EMC:** Interference emission acc. to EN 61000-6-3
  Interference immunity acc. to EN 61000-6-2
- **Cable exit:** Lateral
- **Protection class:** I
- **Product conforming to standards:** EN 60950-1
- **Approvals:** Ⓐ (24 VDC) UL, CSA, Ⓐ (48 VDC) CCC

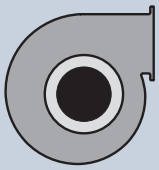

Centrifugal fans	Mass centrifugal fans kg	Centrifugal blowers with flange	Mass centrifugal blowers kg
R1G 133-AE19 -02	0,7	**G1G 133-DE19 -02**	1,3
R1G 133-AE03 -02	0,7	**G1G 133-DE03 -02**	1,3

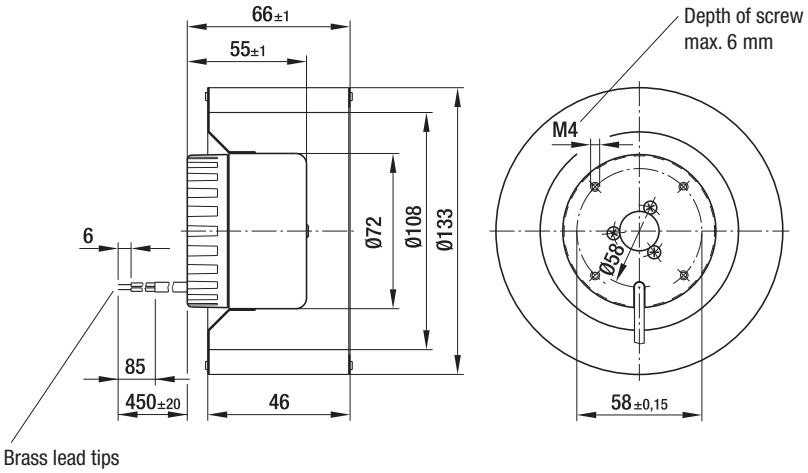

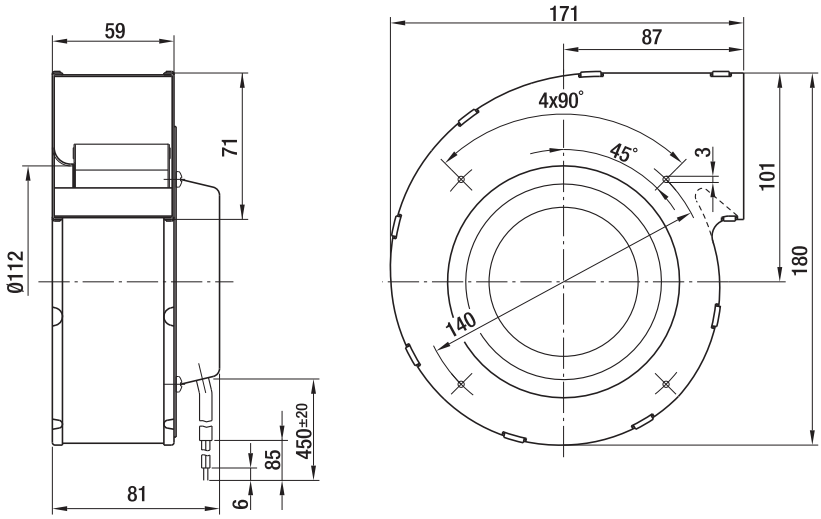

max. 410 m³/h

DC centrifugal fans and blowers

Ø 140 mm

- **Material:** Housing: Die-cast aluminium
  Impeller: Hot-dip galvanised sheet steel
  Rotor: Galvanised
- **Direction of rotation:** Clockwise, seen on rotor
- **Type of protection:** IP 22
- **Insulation class:** "B"
- **Mounting position:** Any
- **Condensate discharges:** None
- **Operation mode:** Continuous operation (S1)
- **Bearings:** Maintenance-free ball bearings

Nominal data		Curve	Nominal voltage	Voltage range	Air flow	Speed / rpm	Input power	Current draw	Sound power level	Min. back-pressure	Perm. amb. temp.	Technical features and electrical connections
Type	**Motor**		**VDC**	**VDC**	**m³/h**	**rpm**	**W**	**A**	**dB(A)**	**Pa**	**°C**	
***1G 140**	M1G 055-BD	Ⓐ	24	16-28	400	1750	54	2,50	63	0	-25...+60	p. 255 / G)
***1G 140**	M1G 055-BD	Ⓐ	48	36-57	410	1750	54	1,30	63	0	-25...+60	p. 255 / G)

Subject to alternations

Curve:

U_N = nominal voltage (24 V /48 V)

U_R = overvoltage (28 V / 57 V)

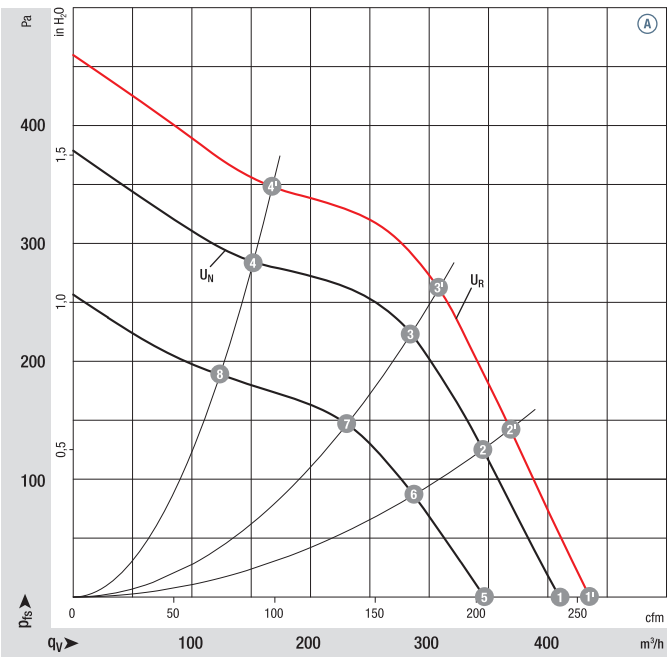

		n rpm	P_{ed} W	Lp_A dB(A)	η_{tL} %
Ⓐ	1'	1850	65	64	—
Ⓐ	2'	2020	61	61	50
Ⓐ	3'	2200	57	59	54
Ⓐ	4'	2550	43	60	40
Ⓐ	1	1750	54	63	—
Ⓐ	2	1900	50	59	51
Ⓐ	3	2030	45	58	54
Ⓐ	4	2310	32	58	40
Ⓐ	5	1500	34	60	—
Ⓐ	6	1580	29	56	50
Ⓐ	7	1670	25	54	53
Ⓐ	8	1880	19	53	41

Air performance measured as per: ISO 5801, Installation category A, with ebm-papst inlet nozzle without protection against accidental contact. Suction-side noise levels: LWA as per ISO 13347, LpA measured at 1 m distance to fan axis. The acoustic values given are only valid under the measurment conditions listed and may vary depending on the installation situation. With any deviation to the standard setup, the specific values have to be checked and reviewed once installed or fitted!
For detailed information see http://www.ebmpapst.com/general conditions

ebmpapst

- **Technical features:** See electrical connections p. 255
- **EMC:** Interference emission acc. to EN 61000-6-3
  Interference immunity acc. to EN 61000-6-2
- **Cable exit:** Axial
- **Protection class:** I
- **Product conforming to standards:** EN 60950-1
- **Approvals:** Ⓐ (48 VDC) CCC

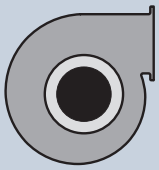

Centrifugal fans	Mass centrifugal fans kg	Centrifugal blowers with flange	Mass centrifugal blowers kg
R1G 140-AV17 -02	1,0	**G1G 140-AV17 -02**	2,3
R1G 140-AV21 -02	1,0	**G1G 140-AV21 -02**	2,3

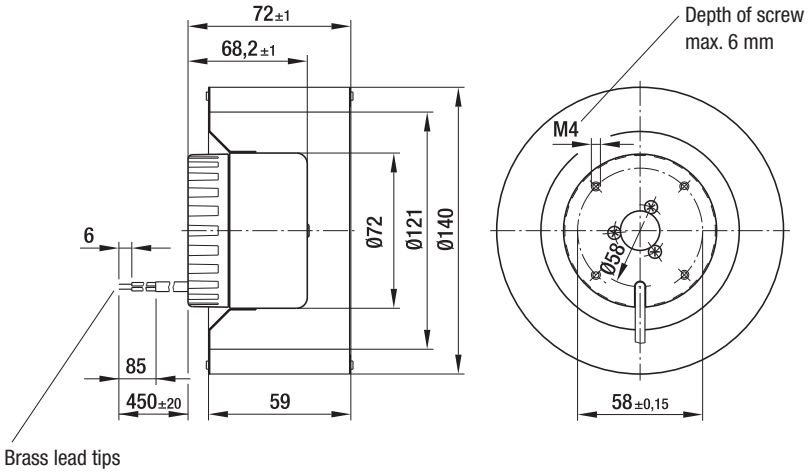

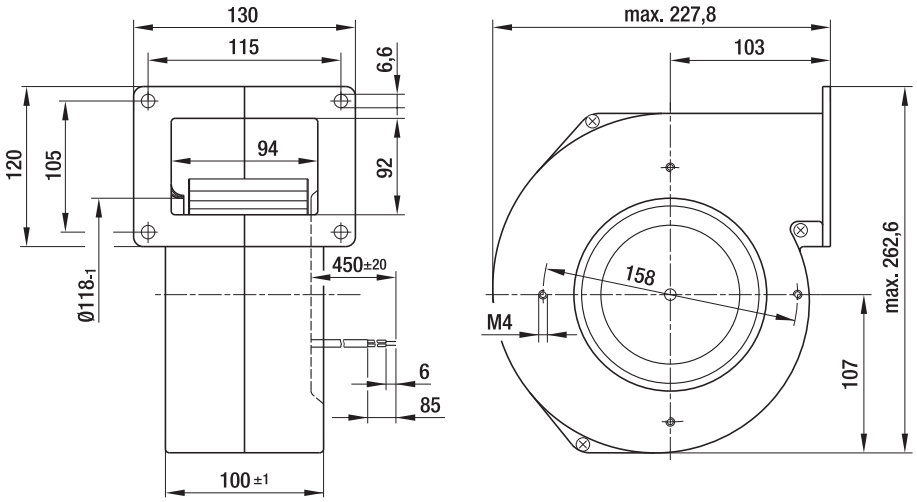

max. 470 m³/h

DC centrifugal fans and blowers

Ø 146 mm

- **Material:** Housing: Die-cast aluminium
  Impeller: Hot-dip galvanised sheet steel
  Rotor: Galvanised
- **Direction of rotation:** Clockwise, seen on rotor
- **Type of protection:** IP 42
- **Insulation class:** "B"
- **Mounting position:** Any
- **Condensate discharges:** None
- **Operation mode:** Continuous operation (S1)
- **Bearings:** Maintenance-free ball bearings

Nominal data		Curve	Nominal voltage	Voltage range	Air flow	Speed / rpm	Input power	Current draw	Sound power level	Min. back-pressure	Perm. amb. temp.	Technical features and electrical connections
Type	**Motor**		**VDC**	**VDC**	**m³/h**	**rpm**	**W**	**A**	**dB(A)**	**Pa**	**°C**	
***1G 146**	M1G 074-BF	A	24	16-28	470	2200	100	5,00	68	0	-25...+60	p. 255 / G)
***1G 146**	M1G 074-BF	A	48	36-57	465	2150	100	2,60	67	0	-25...+60	p. 255 / G)

Subject to alternations

Curve:

U_N = nominal voltage (24 V /48 V)

U_R = overvoltage (28 V / 57 V)

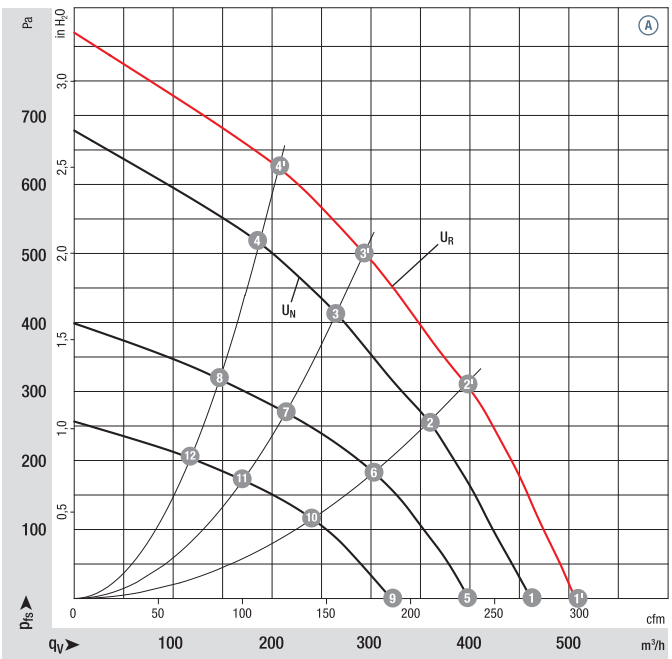

		n rpm	P_{ed} W	Lp_A dB(A)	η_{tL} %
A	1'	2400	140	70	—
A	2'	2650	130	67	45
A	3'	3000	110	66	49
A	4'	3300	100	67	45
A	1	2200	100	68	—
A	2	2445	90	65	46
A	3	2750	84	64	49
A	4	3025	77	65	45
A	5	1890	68	63	—
A	6	2075	57	60	46
A	7	2250	48	61	49
A	8	2335	41	61	45
A	9	1520	37	59	—
A	10	1670	32	55	46
A	11	1815	27	55	49
A	12	1920	23	55	45

Air performance measured as per: ISO 5801, Installation category A, with ebm-papst inlet nozzle without protection against accidental contact. Suction-side noise levels: LWA as per ISO 13347, LpA measured at 1 m distance to fan axis. The acoustic values given are only valid under the measurment conditions listed and may vary depending on the installation situation. With any deviation to the standard setup, the specific values have to be checked and reviewed once installed or fitted!
For detailed information see http://www.ebmpapst.com/general conditions

ebmpapst

- **Technical features:** See electrical connections p. 255
- **EMC:** Interference emission acc. to EN 61000-6-3
  Interference immunity acc. to EN 61000-6-2
- **Cable exit:** Axial
- **Protection class:** I
- **Product conforming to standards:** EN 60950-1
- **Approvals:** UL, CSA, CCC (only centrifugal blowers)

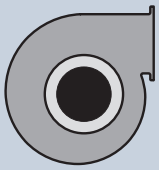

Centrifugal fans	Mass centrifugal fans kg	Centrifugal blowers with flange	Mass centrifugal blowers kg
R1G 146-AA07 -52	1,4	**G1G 146-BA07 -52**	2,8
R1G 146-AA11 -52	1,4	**G1G 146-BA11 -52**	2,8

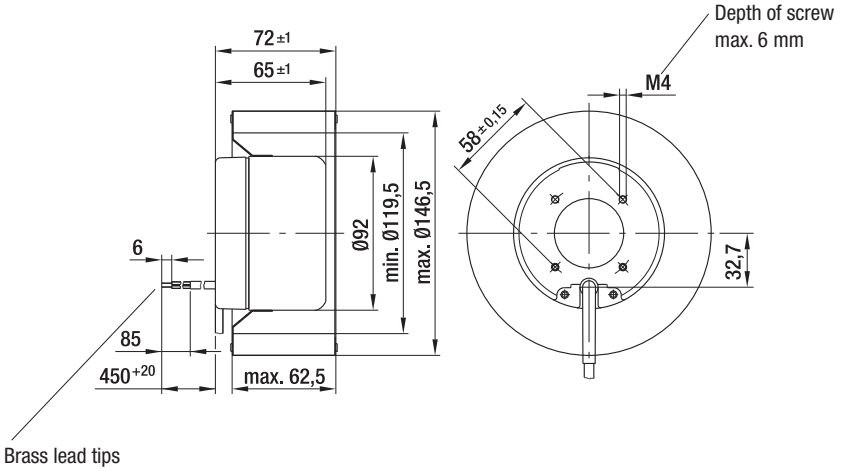

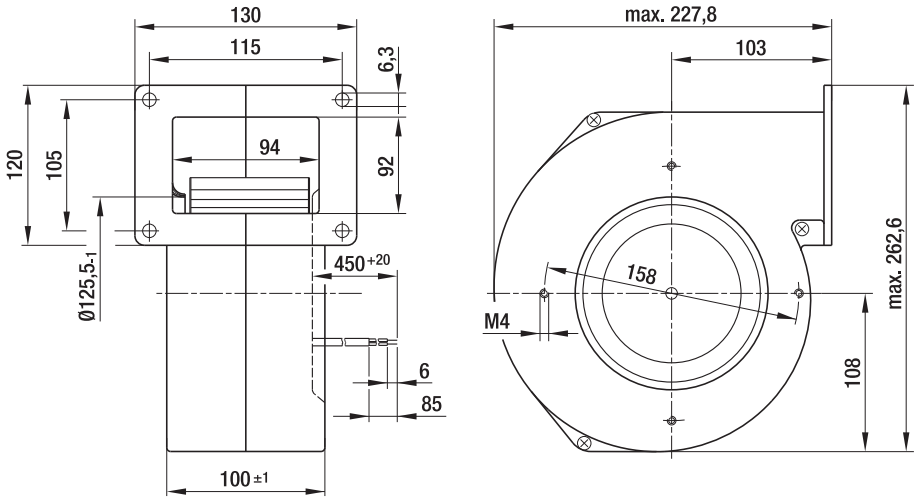

max. 505 m³/h

DC centrifugal fans and blowers

Ø 160 mm

- **Material:** Housing: Die-cast aluminium
  Impeller: Hot-dip galvanised sheet steel
  Rotor: Galvanised
- **Direction of rotation:** Clockwise, seen on rotor
- **Type of protection:** IP 42
- **Insulation class:** "B"
- **Mounting position:** Any
- **Condensate discharges:** None
- **Operation mode:** Continuous operation (S1)
- **Bearings:** Maintenance-free ball bearings

Nominal data		Curve	Nominal voltage	Voltage range	Air flow	Speed / rpm	Input power	Current draw	Sound power level	Min. back-pressure	Perm. amb. temp.	Technical features and electrical connections
Type	**Motor**		**VDC**	**VDC**	**m³/h**	**rpm**	**W**	**A**	**dB(A)**	**Pa**	**°C**	
***1G 160**	M1G 074-BF	A	24	16-28	505	1750	105	5,80	67	0	-25...+60	p. 255 / G)
***1G 160**	M1G 074-BF	A	48	36-57	505	1750	105	2,90	67	0	-25...+60	p. 255 / G)

Subject to alternations

Curve:

U_N = nominal voltage (24 V /48 V)

U_R = overvoltage (28 V / 57 V)

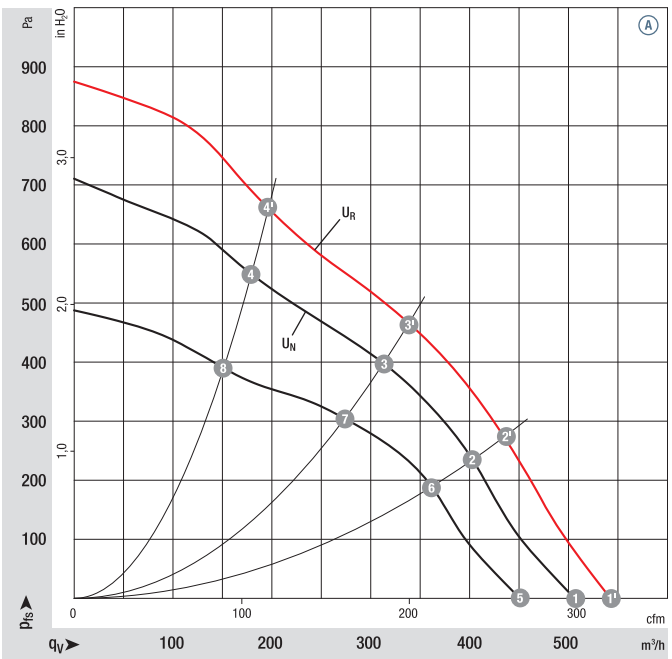

		n rpm	P_{ed} W	Lp_A dB(A)	η_{tL} %
A	1'	1890	134	68	—
A	2'	2200	118	67	52
A	3'	2500	110	67	57
A	4'	2900	102	69	52
A	1	1750	105	67	—
A	2	2030	95	66	52
A	3	2270	90	65	57
A	4	2550	81	67	44
A	5	1580	72	62	—
A	6	1810	66	62	52
A	7	2000	58	62	57
A	8	2200	48	63	54

Air performance measured as per: ISO 5801, Installation category A, with ebm-papst inlet nozzle without protection against accidental contact. Suction-side noise levels: LWA as per ISO 13347, LpA measured at 1 m distance to fan axis. The acoustic values given are only valid under the measurment conditions listed and may vary depending on the installation situation. With any deviation to the standard setup, the specific values have to be checked and reviewed once installed or fitted!
For detailed information see http://www.ebmpapst.com/general conditions

ebmpapst

- **Technical features:** See electrical connections p. 255
- **EMC:** Interference emission acc. to EN 61000-6-3
  Interference immunity acc. to EN 61000-6-2
- **Cable exit:** Axial
- **Protection class:** I
- **Product conforming to standards:** EN 60950-1
- **Approvals:** UL, CSA

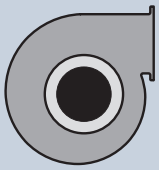

Centrifugal fans	Mass centrifugal fans kg	Centrifugal blowers with flange	Mass centrifugal blowers kg
R1G 160-AH29 -52	1,4	**G1G 160-BH29 -52**	2,8
R1G 160-AH39 -52	1,4	**G1G 160-BH39 -52**	2,8

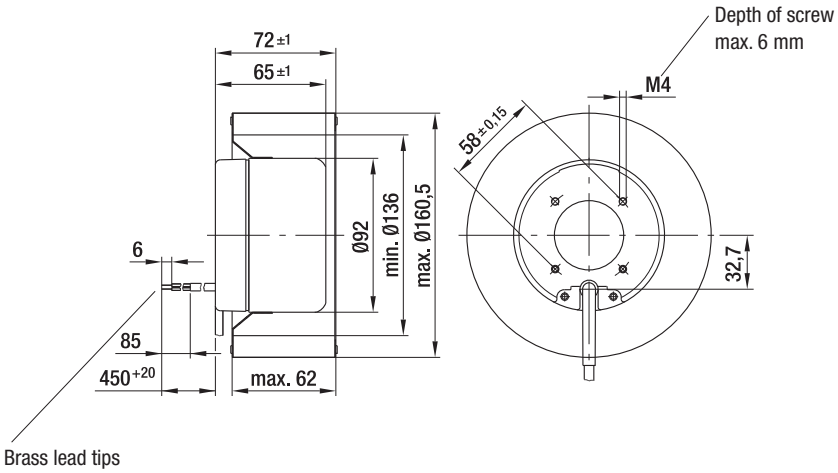

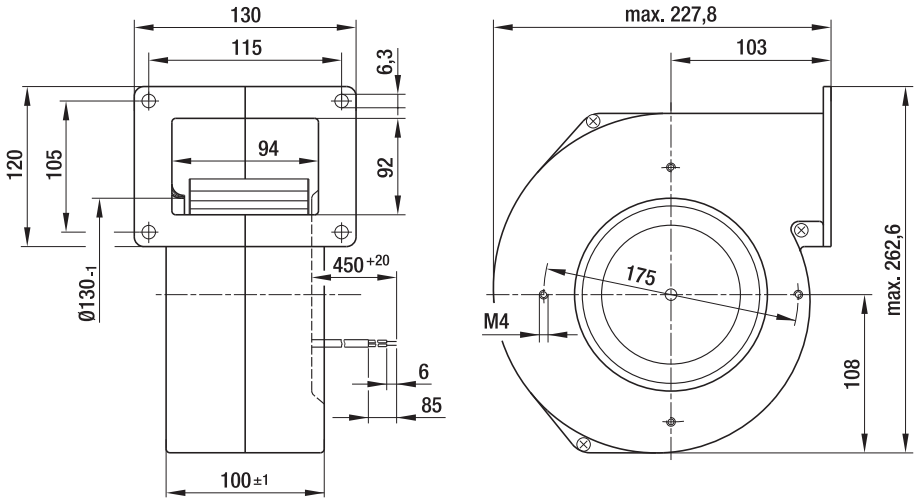

max. 700 m³/h

DC Centrifugal blowers

Ø 133 mm

- **Material:** Housing: Galvanised sheet steel
  Impeller: Galvanised sheet steel
  Rotor: Coated in black
- **Direction of rotation:** Clockwise, seen on rotor
- **Type of protection:** IP 42
- **Insulation class:** "B"
- **Mounting position:** Any
- **Condensate discharges:** None
- **Operation mode:** Continuous operation (S1)
- **Design:** Standard external-rotor motor anti-vibration mounted on both sides
- **Bearings:** Maintenance-free ball bearings

Nominal data		Curve	Nominal voltage	Voltage range	Air flow	Speed / rpm	Input power	Current draw	Sound power level	Min. back-pressure	Perm. amb. temp.	Technical features and electrical connections
Type	**Motor**		**VDC**	**VDC**	**m³/h**	**rpm**	**W**	**A**	**dB(A)**	**Pa**	**°C**	
D1G 133	M1G 074-BF	A	24	16-28	700	1780	105	5,60	62	50	-25...+60	p. 255 / G)
D1G 133	M1G 074-BF	A	48	36-57	700	1780	105	2,80	62	50	-25...+60	p. 255 / G)

Subject to alternations

Curve:

U_N = nominal voltage (24 V /48 V)

U_R = overvoltage (28 V / 57 V)

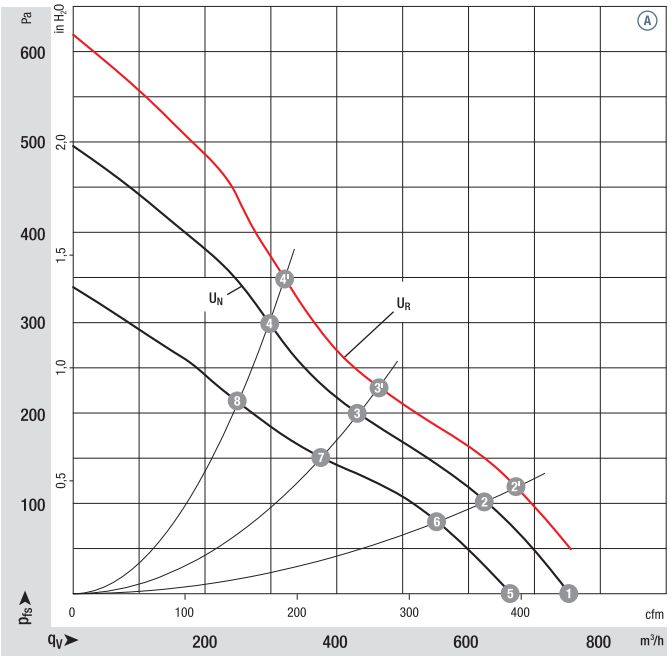

	n rpm	P_{ed} W	Lp_A dB(A)	η_{tL} %
A 1'	—	—	—	—
A 2'	2050	121	63	49
A 3'	2490	106	62	41
A 4'	2820	100	62	37
A 1	1780	105	62	—
A 2	1900	97	61	49
A 3	2310	86	59	41
A 4	2630	80	60	37
A 5	1500	73	59	—
A 6	1720	67	57	49
A 7	2020	58	56	41
A 8	2230	49	56	37

Air performance measured as per: ISO 5801, Installation category A, with ebm-papst inlet nozzle without protection against accidental contact. Suction-side noise levels: LWA as per ISO 13347, LpA measured at 1 m distance to fan axis. The acoustic values given are only valid under the measurment conditions listed and may vary depending on the installation situation. With any deviation to the standard setup, the specific values have to be checked and reviewed once installed or fitted!
For detailed information see http://www.ebmpapst.com/general conditions

ebmpapst

- **Technical features:** See electrical connections p. 255
- **EMC:** Interference emission acc. to EN 61000-6-3
  Interference immunity acc. to EN 61000-6-2
- **Cable exit:** Variabel
- **Protection class:** I
- **Product conforming to standards:** EN 60950-1
- **Approvals:** UL, CSA; Ⓐ (48 VDC) auch CCC

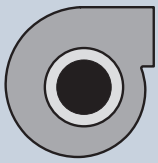

Centrifugal blowers without flange	Mass centrifugal blowers kg
D1G 133-AB29 -52	3,3
D1G 133-AB39 -52	3,3

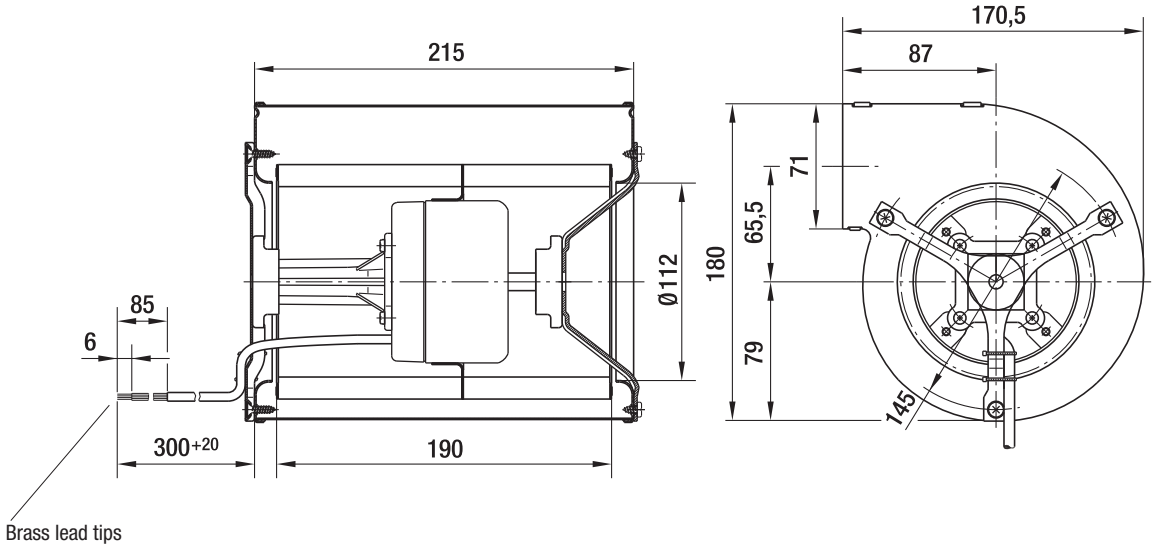

max. 1020 m³/h

DC Centrifugal blowers

Ø 133 mm

- **Material:** Housing: Galvanised sheet steel
  Impeller: Galvanised sheet steel
  Rotor: Coated in black
- **Direction of rotation:** Clockwise, seen on rotor
- **Type of protection:** IP 42
- **Insulation class:** "B"
- **Mounting position:** Any
- **Condensate discharges:** None
- **Operation mode:** Continuous operation (S1)
- **Design:** Standard external-rotor motor anti-vibration mounted on both sides
- **Bearings:** Maintenance-free ball bearings

Nominal data		Curve	Nominal voltage	Voltage range	Air flow	Speed / rpm	Input power	Current draw	Sound power level	Min. back-pressure	Perm. amb. temp.	Technical features and electrical connections
Type	**Motor**		**VDC**	**VDC**	**m³/h**	**rpm**	**W**	**A**	**dB(A)**	**Pa**	**°C**	
D1G 133	M1G 074-BF	A	24	16-28	1020	1580	118	6,00	64	0	-25...+60	p. 255 / G)
D1G 133	M1G 074-BF	A	48	36-57	1020	1580	118	3,00	64	0	-25...+60	p. 255 / G)

Subject to alternations

Curve:

U_N = nominal voltage (24 V /48 V)

U_R = overvoltage (28 V / 57 V)

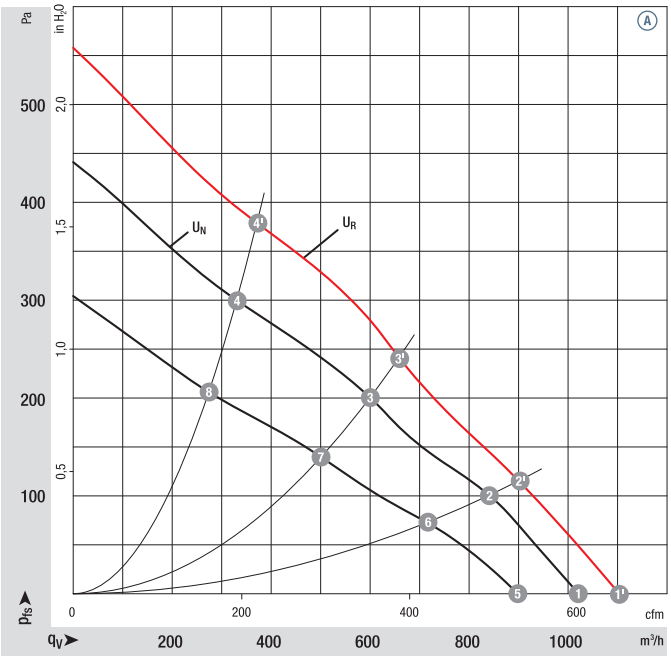

		n rpm	P_{ed} W	Lp_A dB(A)	η_{tL} %
A	1'	1700	145	65	—
A	2'	1930	133	62	38
A	3'	2290	122	59	41
A	4'	2700	99	61	32
A	1	1580	118	64	—
A	2	1790	107	61	38
A	3	2100	95	57	41
A	4	2410	73	58	32
A	5	1400	78	60	—
A	6	1580	70	56	38
A	7	1760	56	53	41
A	8	2000	44	53	32

Air performance measured as per: ISO 5801, Installation category A, with ebm-papst inlet nozzle without protection against accidental contact. Suction-side noise levels: LWA as per ISO 13347, LpA measured at 1 m distance to fan axis. The acoustic values given are only valid under the measurment conditions listed and may vary depending on the installation situation. With any deviation to the standard setup, the specific values have to be checked and reviewed once installed or fitted!
For detailed information see http://www.ebmpapst.com/general conditions

ebmpapst

- **Technical features:** See electrical connections p. 255
- **EMC:** Interference emission acc. to EN 61000-6-3
  Interference immunity acc. to EN 61000-6-2
- **Cable exit:** Variabel
- **Protection class:** I
- **Product conforming to standards:** EN 60950-1
- **Approvals:** UL, CSA

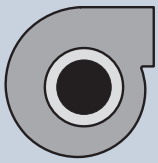

Centrifugal blowers without flange	Mass centrifugal blowers kg
D1G 133-DC13 -52	3,4
D1G 133-DC17 -52	3,4

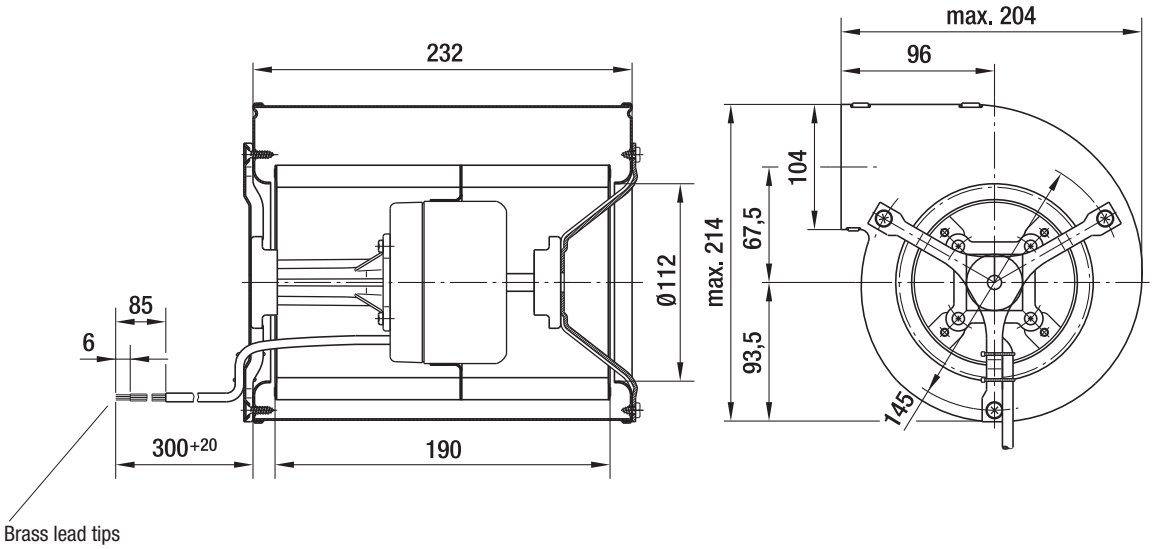

max. 1000 m³/h

DC Centrifugal blowers

Ø 146 mm

- **Material:** Housing: Galvanised sheet steel
  Impeller: Galvanised sheet steel
  Rotor: Coated in black
- **Direction of rotation:** Clockwise, seen on rotor
- **Type of protection:** IP 42
- **Insulation class:** "B"
- **Mounting position:** Any
- **Condensate discharges:** None
- **Operation mode:** Continuous operation (S1)
- **Design:** Standard external-rotor motor anti-vibration mounted on both sides
- **Bearings:** Maintenance-free ball bearings

Nominal data		Curve	Nominal voltage	Voltage range	Air flow	Speed / rpm	Input power	Current draw	Sound power level	Min. back-pressure	Perm. amb. temp.	Technical features and electrical connections
Type	**Motor**		**VDC**	**VDC**	**m³/h**	**rpm**	**W**	**A**	**dB(A)**	**Pa**	**°C**	
D1G 146	M1G 074-CF	A	24	16-28	1000	1350	105	5,10	61	0	-25...+60	p. 255 / G)
D1G 146	M1G 074-CF	A	48	36-57	1000	1350	105	2,60	61	0	-25...+60	p. 255 / G)

Subject to alternations

Curve:

U_N = nominal voltage (24 V /48 V)

U_R = overvoltage (28 V / 57 V)

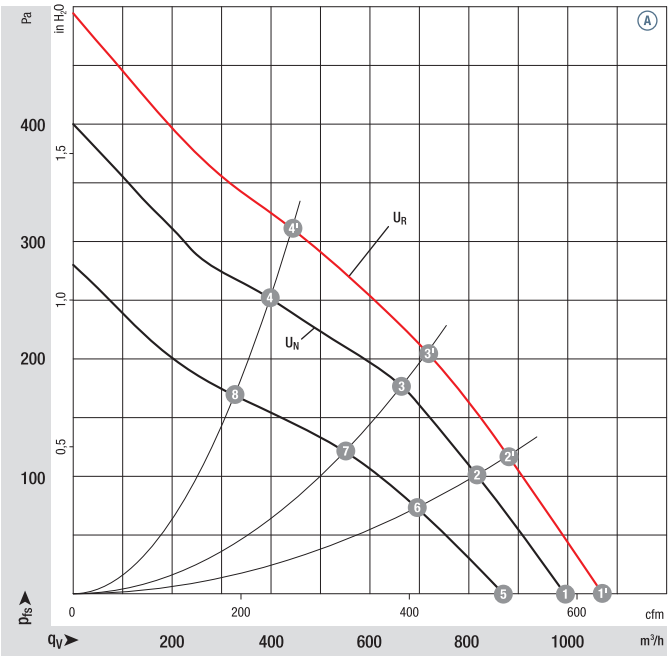

		n rpm	P_{ed} W	Lp_A dB(A)	η_{tL} %
A	1'	1460	129	63	—
A	2'	1680	119	60	53
A	3'	1890	111	58	61
A	4'	2240	95	59	55
A	1	1350	105	61	—
A	2	1570	95	58	53
A	3	1750	88	56	61
A	4	2010	70	57	55
A	5	1210	70	56	—
A	6	1360	60	54	53
A	7	1460	53	52	61
A	8	1670	42	51	55

Air performance measured as per: ISO 5801, Installation category A, with ebm-papst inlet nozzle without protection against accidental contact. Suction-side noise levels: LWA as per ISO 13347, LpA measured at 1 m distance to fan axis. The acoustic values given are only valid under the measurment conditions listed and may vary depending on the installation situation. With any deviation to the standard setup, the specific values have to be checked and reviewed once installed or fitted!
For detailed information see http://www.ebmpapst.com/general conditions

ebmpapst

- **Technical features:** See electrical connections p. 255
- **EMC:** Interference emission acc. to EN 61000-6-3
  Interference immunity acc. to EN 61000-6-2
- **Cable exit:** Variabel
- **Protection class:** I
- **Product conforming to standards:** EN 60950-1
- **Approvals:** UL, CSA

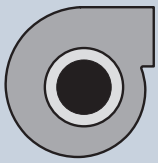

Centrifugal blowers without flange	Mass centrifugal blowers kg
D1G 146-AA19 -52	3,5
D1G 146-AA33 -52	3,5

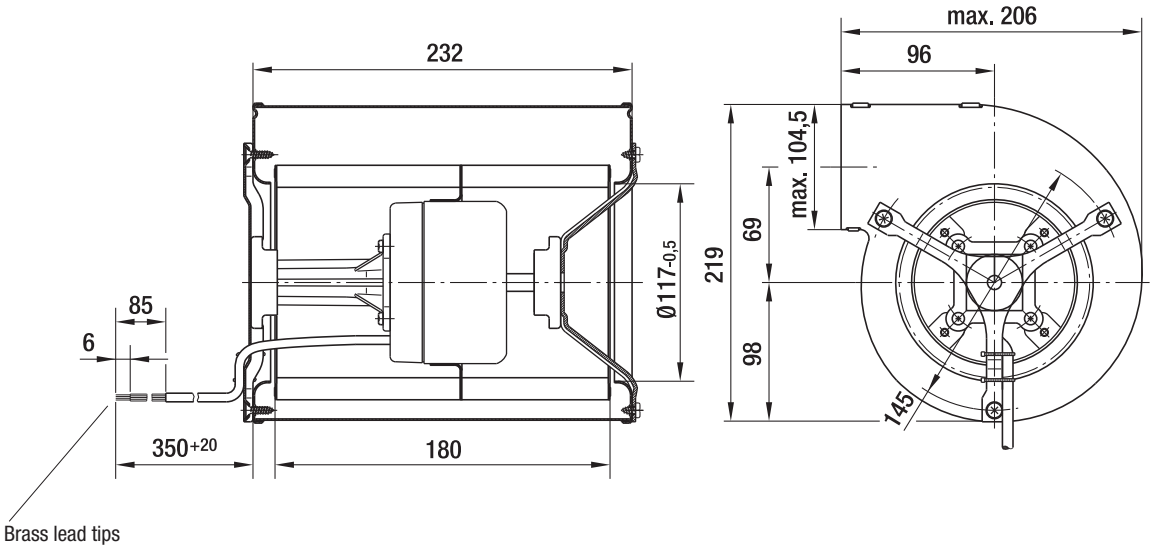

max. 980 m³/h

DC Centrifugal blowers

Ø 160 mm

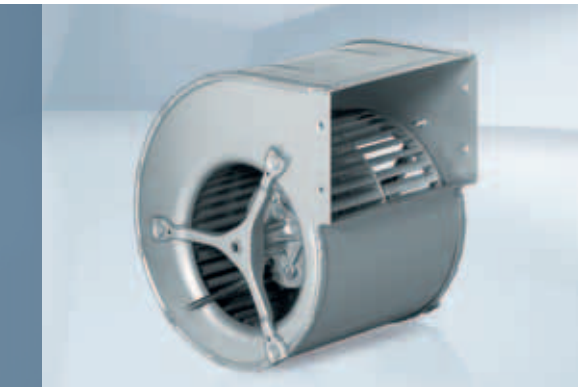

- **Material:** Housing: Galvanised sheet steel
  Impeller: Galvanised sheet steel
  Rotor: Coated in black
- **Direction of rotation:** Clockwise, seen on rotor
- **Type of protection:** IP 42
- **Insulation class:** "B"
- **Mounting position:** Any
- **Condensate discharges:** None
- **Operation mode:** Continuous operation (S1)
- **Design:** Standard external-rotor motor anti-vibration mounted on both sides
- **Bearings:** Maintenance-free ball bearings

Nominal data

Type	Motor	Curve	Nominal voltage VDC	Voltage range VDC	Air flow m³/h	Speed / rpm rpm	Input power W	Current draw A	Sound power level dB(A)	Min. back-pressure Pa	Perm. amb. temp. °C	Technical features and electrical connections
D1G 160	M1G 074-CF	A	24	16-28	980	1250	112	5,60	60	0	-25...+60	p. 255 / G)
D1G 160	M1G 074-CF	A	48	36-57	980	1250	112	2,90	60	0	-25...+60	p. 255 / G)

Subject to alternations

Curve:

U_N = nominal voltage (24 V /48 V)

U_R = overvoltage (28 V / 57 V)

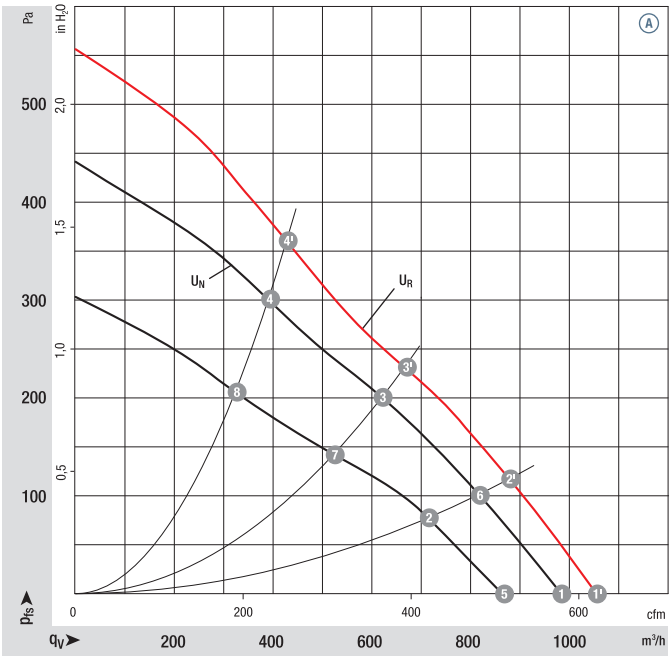

		n rpm	P_{ed} W	Lp_A dB(A)	η_{tL} %
A	1'	1330	142	63	—
A	2'	1520	128	61	64
A	3'	1790	115	59	66
A	4'	2090	105	60	60
A	1	1250	112	60	—
A	2	1420	102	59	64
A	3	1660	92	58	66
A	4	1900	80	58	60
A	5	1100	75	58	—
A	6	1250	69	56	64
A	7	1420	58	54	66
A	8	1580	47	53	60

Air performance measured as per: ISO 5801, Installation category A, with ebm-papst inlet nozzle without protection against accidental contact. Suction-side noise levels: LWA as per ISO 13347, LpA measured at 1 m distance to fan axis. The acoustic values given are only valid under the measurment conditions listed and may vary depending on the installation situation. With any deviation to the standard setup, the specific values have to be checked and reviewed once installed or fitted!
For detailed information see http://www.ebmpapst.com/general conditions

ebmpapst

- **Technical features:** See electrical connections p. 255
- **EMC:** Interference emission acc. to EN 61000-6-3
  Interference immunity acc. to EN 61000-6-2
- **Cable exit:** Variabel
- **Protection class:** I
- **Product conforming to standards:** EN 60950-1
- **Approvals:** UL, CSA

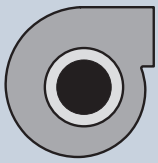
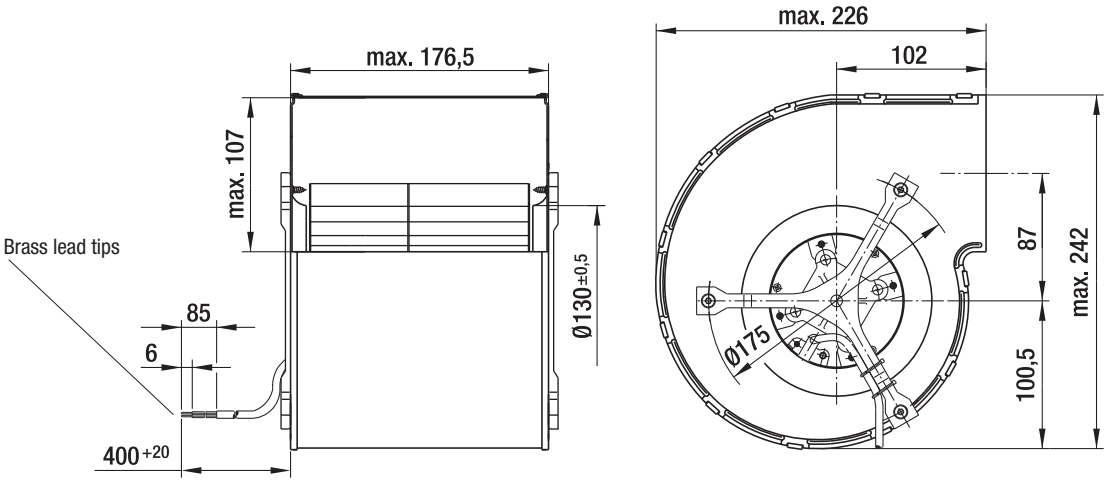
Centrifugal blowers without flange	Mass centrifugal blowers kg
D1G 160-DA19 -52	3,6
D1G 160-DA33 -52	3,6