max. 61 m³/h

AC axial fans

Series 8000 N 80 x 80 x 38 mm

- **Material:** Housing: Die-cast aluminium
  Impeller: Painted sheet steel
- **Direction of air flow:** Exhaust over struts
- **Direction of rotation:** Clockwise, seen on rotor
- **Connection:** Via 2 single wires
  grounding lug for M4 x 8
- **Mass:** 490 g
- **Note:**
  Please note our new ACmaxx series. With identical mounting dimensions and voltages, this series achieves higher energy efficiency. See page 184

- **Possible special versions:**
  (See page 12)
  - Protection against moisture
  - Protection against salt fog
  - Type of protection: IP 54 / IP 68

Nominal data	Air flow	Air flow	Nominal voltage	Frequency	Sound pressure level	Sound power level	Sintec sleeve bearings / Ball bearings	Input power	Nominal speed	Temperature range	Service life L_{10} at 40 °C	at T_{max}	Curve
Type	**m³/h**	**CFM**	**VAC**	**Hz**	**dB(A)**	**Bel(A)**	□/■	**Watts**	**rpm**	**°C**	**Hours**	**Hours**	
8880 N	30	17,7	**230**	**50**	18	3,3	□/	9,0	1 750	-10...+80	60 000 / 25 000		①
8850 N	37	21,8	**230**	**50**	24	3,9	□/	12,5	2 150	-10...+70	52 500 / 25 000		②
8550 N	50	29,4	**230**	**50**	30	4,4	□/	12,0	2 700	-10...+70	52 500 / 25 000		③
8556 N	50	29,4	**230**	**50**	31	4,5	/■	12,0	2 800	-40...+90	52 500 / 15 000		③
8830 N	36	21,2	**115**	**60**	21	3,7	□/	8,0	1 950	-10...+80	62 500 / 25 000		④
8800 N	47	27,7	**115**	**60**	28	4,3	□/	11,0	2 500	-10...+70	55 000 / 27 500		⑤
8500 N	61	35,9	**115**	**60**	34	4,8	□/	11,0	3 200	-10...+75	55 000 / 25 000		⑥
8506 N	61	35,9	**115**	**60**	35	5,0	/■	11,0	3 300	-40...+95	55 000 / 15 000		⑥

Subject to alternations

Fan type					Length "L"	Lead wires
8880 N	8830 N	8800 N	8550 N	8500 N	310 mm long	AWG 18, TR 64
8556 N	8506 N				310 mm long	AWG 22
8850 N					440 mm long	AWG 18, TR 64

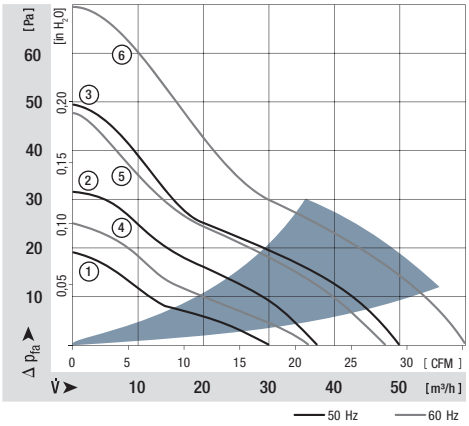

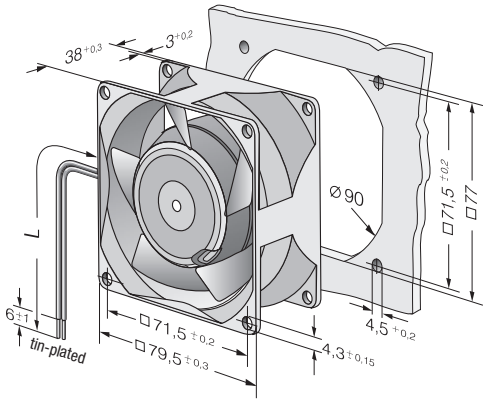

Guard grilles
from p. 238

ebmpapst

max. 47 m³/h

AC axial fans

Series 8000 TV Ø 76 x 37 mm

- **Material:** Impeller: Die-cast aluminium
  Mounting bracket: Metal
- **Direction of air flow:** Exhaust over mounting bracket
- **Direction of rotation:** Clockwise, seen on rotor
- **Connection:** Via 2 single wires
- **Mass:** 370 g

- **Possible special versions:**
  (See page 12)
  - Protection against moisture
  - Protection against salt fog
  - Type of protection: IP 54 / IP 68

Nominal data	Air flow	Air flow	Nominal voltage	Frequency	Sound pressure level	Sintec sleeve bearings / Ball bearings	Input power	Nominal speed	Temperature range	Service life L_{10} at 40 °C	at T_{max}
Type	**m³/h**	**CFM**	**VAC**	**Hz**	**dB(A)**	□/■	**Watts**	**rpm**	**°C**	**Hours**	**Hours**
8880 TV	24	14,1	**230**	**50**	15	□/	9,0	1 650	-10...+80	60 000 / 25 000	
8850 TV	31	18,2	**230**	**50**	20	□/	12,0	2 100	-10...+70	52 500 / 25 000	
8550 TV	40	23,5	**230**	**50**	27	□/	12,0	2 650	-10...+70	52 500 / 25 000	
8556 TV	40	23,5	**230**	**50**	28	/■	12,0	2 750	-40...+90	52 500 / 15 000	
8830 TV	27	15,9	**115**	**60**	18	□/	8,0	1 850	-10...+80	62 500 / 25 000	
8800 TV	36	21,2	**115**	**60**	24	□/	11,0	2 450	-10...+70	55 000 / 27 500	
8500 TV	47	27,7	**115**	**60**	32	□/	11,0	3 150	-10...+75	55 000 / 25 000	
8506 TV	47	27,7	**115**	**60**	33	/■	11,0	3 250	-40...+95	55 000 / 15 000	

Subject to alternations

The air flow and noise level of fans without external housing depends on the installation conditions. The stated air flow and noise has been measured with an orifice 76.5 mm Ø at a distance of approx. 17 mm from the mounting bracket. Under exceptionally favourable mounting conditions, the air flow of fan series 8000 N is achievable. The noise in the optimal operating range can only be measured for these fans in a specific application.

Fan type				Length "L"	Lead wires
8880 TV	8850 TV	8830 TV	8800 TV	325 mm long	AWG 18, TR 64
8550 TV	8500 TV			325 mm long	AWG 18, TR 64
8556 TV	8506 TV			325 mm long	AWG 18

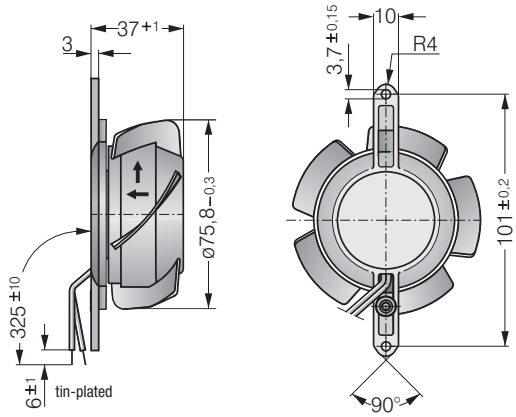

max. 70 m³/h

AC axial fans

Series 3900 92 x 92 x 25 mm

- **Material:** Housing: Die-cast aluminium
  Impeller: Mineral-reinforced plastic PA
- **Direction of air flow:** Exhaust over struts
- **Direction of rotation:** Counter-clockwise, seen on rotor
- **Connection:** Via 2 flat plug 2,8 x 0,5 mm
  grounding lug for M4
- **Mass:** 280 g
- **Note:**
  Please note our new ACmaxx series. With identical mounting dimensions and voltages, this series achieves higher energy efficiency. See page 185

- **Possible special versions:**
  (See page 12)
  - Protection against moisture

Nominal data	Air flow	Air flow	Nominal voltage	Frequency	Sound pressure level	Sound power level	Sintec sleeve bearings / Ball bearings	Input power	Nominal speed	Temperature range	Service life L_{10} at 40 °C	at T_{max}	Curve
Type	**m³/h**	**CFM**	**VAC**	**Hz**	**dB(A)**	**Bel(A)**	□/■	**Watts**	**rpm**	**°C**	**Hours**	**Hours**	
3950 L	31	18,2	**230**	**50**	24	3,8	□/	6,0	1 550	-10...+80	70 000 / 27 500		①
3956 L	31	18,2	**230**	**50**	24	3,8	/■	6,0	1 550	-40...+80	70 000 / 27 500		①
3950 M	45	26,5	**230**	**50**	29	4,2	□/	6,0	2 150	-10...+80	70 000 / 27 500		②
3956 M	45	26,5	**230**	**50**	29	4,2	/■	6,0	2 150	-40...+80	70 000 / 27 500		②
3950	59	34,7	**230**	**50**	35	4,7	□/	11,0	2 650	-20...+80	55 000 / 20 000		③
3956	59	34,7	**230**	**50**	35	4,7	/■	11,0	2 650	-40...+80	55 000 / 20 000		③
3900 L	39	23,0	**115**	**60**	27	4,0	□/	5,0	1 850	-10...+80	70 000 / 27 500		④
3906 L	39	23,0	**115**	**60**	27	4,0	/■	5,0	1 850	-40...+80	70 000 / 27 500		④
3900 M	53	31,2	**115**	**60**	34	4,6	□/	5,0	2 600	-10...+80	70 000 / 27 500		⑤
3906 M	53	31,2	**115**	**60**	34	4,6	/■	5,0	2 600	-40...+80	70 000 / 27 500		⑤
3900	70	41,2	**115**	**60**	40	5,1	□/	9,0	3 150	-20...+80	60 000 / 22 500		⑥
3906	70	41,2	**115**	**60**	40	5,1	/■	9,0	3 150	-40...+80	60 000 / 22 500		⑥

Subject to alternations

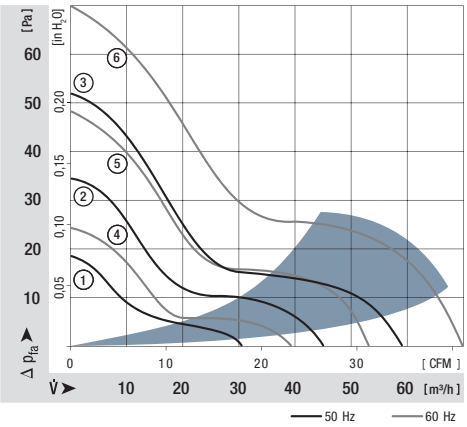

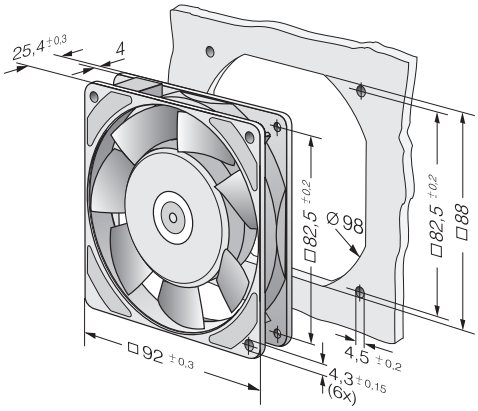

ebmpapst

max. 89 m³/h

AC axial fans

Series 3000 92 x 92 x 38 mm

- **Material:** Housing: Die-cast aluminium
  Impeller: Painted sheet steel
- **Direction of air flow:** Exhaust over struts
- **Direction of rotation:** Clockwise, seen on rotor
- **Connection:** Via 2 single wires
  grounding lug for M4 x 8
- **Mass:** 420 g
- **Note:**
  Please note our new ACmaxx series. With identical mounting dimensions and voltages, this series achieves higher energy efficiency. See page 185

- **Possible special versions:**
  (See page 12)
  - Protection against moisture
  - Protection against salt fog
  - Type of protection: IP 54 / IP 68

Nominal data	Air flow	Air flow	Nominal voltage	Frequency	Sound pressure level	Sound power level	Sintec sleeve bearings / Ball bearings	Input power	Nominal speed	Temperature range	Service life L_{10} at 40 °C	at T_{max}	Curve
Type	**m³/h**	**CFM**	**VAC**	**Hz**	**dB(A)**	**Bel(A)**	□/■	**Watts**	**rpm**	**°C**	**Hours**	**Hours**	
3850	49	28,8	**230**	**50**	24	3,7	□/	9,0	1 750	-10...+75	60 000 / 27 500		①
3856	54	31,8	**230**	**50**	26	3,9	/■	9,0	1 950	-40...+90	60 000 / 20 000		②
3550	67	39,4	**230**	**50**	32	4,4	□/	8,5	2 300	-10...+80	60 000 / 25 000		③
3556	67	39,4	**230**	**50**	33	4,5	/■	8,5	2 400	-40...+90	60 000 / 20 000		③
3650	75	44,1	**230**	**50**	36	4,8	□/	12,0	2 650	-10...+55	52 500 / 37 500		④
3656	75	44,1	**230**	**50**	37	4,9	/■	12,0	2 700	-40...+75	52 500 / 22 500		④
3800	54	31,8	**115**	**60**	26	3,9	□/	8,0	1 900	-10...+80	62 500 / 25 000		⑤
3806	60	35,3	**115**	**60**	29	4,2	/■	8,0	2 150	-40...+95	62 500 / 17 500		⑥
3500	73	43,0	**115**	**60**	35	4,6	□/	8,0	2 500	-10...+80	62 500 / 25 000		⑦
3506	73	43,0	**115**	**60**	36	4,7	/■	8,0	2 600	-40...+95	62 500 / 17 500		⑦
3600	89	52,4	**115**	**60**	41	5,1	□/	11,0	3 100	-10...+65	55 000 / 30 000		⑧
3606	89	52,4	**115**	**60**	42	5,2	/■	11,0	3 200	-40...+75	55 000 / 25 000		⑧

Subject to alternations

Fan type	Length "L"	Lead wires
With sleeve bearings	310 mm long	AWG 18, TR 64
With ball bearings	310 mm long	AWG 18

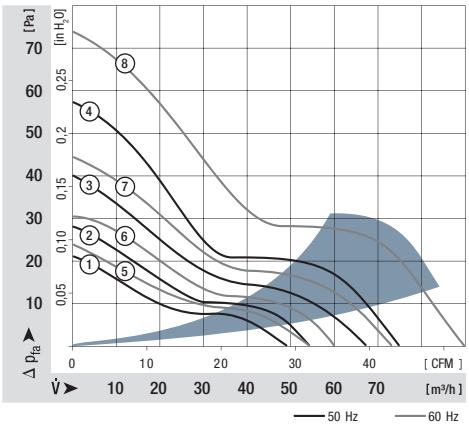

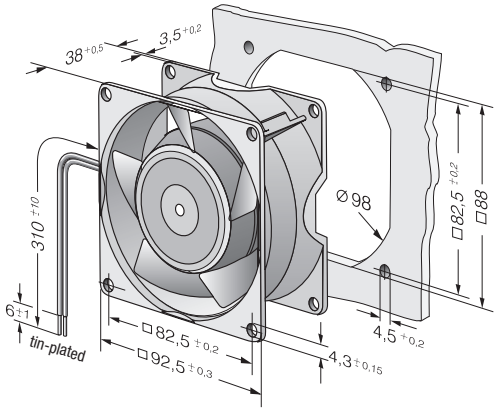

max. 135 m³/h

AC axial fans

Series 9900 119 x 119 x 25 mm

- **Material:** Housing: Die-cast aluminium
  Impeller: Mineral-reinforced plastic PA
- **Direction of air flow:** Exhaust over struts
- **Direction of rotation:** Counter-clockwise, seen on rotor
- **Connection:** Via 2 flat plug 2,8 x 0,5 mm
  grounding lug for M4
- **Mass:** 320 g
- **Note:**
  Please note our new ACmaxx series. With identical mounting dimensions and voltages, this series achieves higher energy efficiency. See page 188

- **Possible special versions:**
  (See page 12)
  - Protection against moisture

Nominal data	Air flow	Air flow	Nominal voltage	Frequency	Sound pressure level	Sound power level	Sintec sleeve bearings / Ball bearings	Input power	Nominal speed	Temperature range	Service life L_{10} at 40 °C	at T_{max}	Curve
Type	**m³/h**	**CFM**	**VAC**	**Hz**	**dB(A)**	**Bel(A)**	□/■	**Watts**	**rpm**	**°C**	**Hours**	**Hours**	
9956 L	84	49,4	**230**	**50**	29	4,4	/■	9,5	1850	-40...+80	57 500 / 22 500		①
9956 M	104	61,2	**230**	**50**	35	4,7	/■	10,0	2250	-40...+80	57 500 / 22 500		②
9950	117	68,9	**230**	**50**	37	5,0	□/	14,0	2450	-20...+70	47 500 / 22 500		③
9956	117	68,9	**230**	**50**	37	5,0	/■	14,0	2450	-40...+70	47 500 / 22 500		③
9906 L	100	58,9	**115**	**60**	34	4,6	/■	8,0	2100	-40...+80	62 500 / 25 000		④
9906 M	111	65,3	**115**	**60**	37	5,0	/■	8,0	2450	-40...+80	62 500 / 25 000		⑤
9900	135	79,5	**115**	**60**	42	5,4	□/	12,0	2850	-20...+70	52 500 / 25 000		⑥
9906	135	79,5	**115**	**60**	42	5,4	/■	12,0	2850	-40...+70	52 500 / 25 000		⑥

Subject to alternations

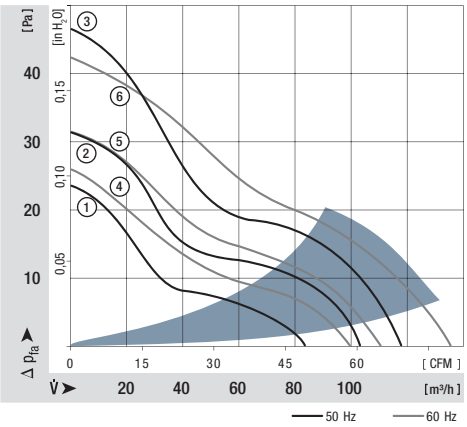

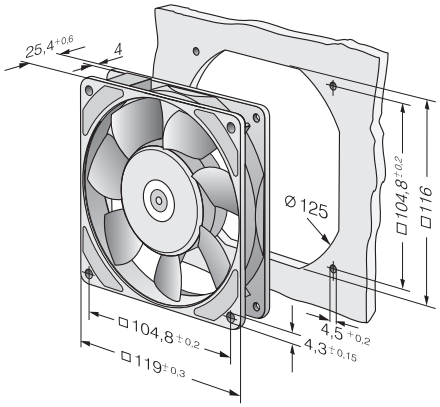

ebmpapst

max. 180 m³/h

AC axial fans

Series 4000 N 119 x 119 x 38 mm

- **Material:** Housing: Die-cast aluminium
  Impeller: Painted sheet steel
- **Direction of air flow:** Intake over struts
  Types 4890 N and 4840 N exhaust over struts
- **Direction of rotation:** Clockwise, seen on rotor
- **Connection:** Via 2 flat plug 2,8 x 0,5 mm
  grounding lug for M4
- **Mass:** 550 g
- **Note:**
  Please note our new ACmaxx series. With identical mounting dimensions and voltages, this series achieves higher energy efficiency. See page 188

- **Optionally available:**
  Variants with strengthened mounting flanges and customizable single strands
- **Possible special versions:**
  (See page 12)
  - Speed signal
  - Protection against moisture
  - Protection against salt fog
  - Type of protection: IP 54 / IP 68

Nominal data	Air flow	Air flow	Nominal voltage	Frequency	Sound pressure level	Sound power level	Sintec sleeve bearings / Ball bearings	Input power	Nominal speed	Temperature range	Service life L_{10} at 40 °C	at T_{max}	Curve
Type	**m³/h**	**CFM**	**VAC**	**Hz**	**dB(A)**	**Bel(A)**	□/■	**Watts**	**rpm**	**°C**	**Hours**	**Hours**	
4890 N	80	47	**230**	**50**	25	4,0	□/	11,0	1 550	-10...+70	55 000 / 27 500		①
4850 N*	100	59	**230**	**50**	32	4,4	□/	10,0	1 800	-10...+70	57 500 / 27 500		②
4580 N*	123	72	**230**	**50**	41	5,2	□/	18,0	2 350	-10...+55	40 000 / 27 500		③
4550 N*	145	85	**230**	**50**	44	5,4	□/	16,5	2 550	-10...+55	42 500 / 30 000		④
4650 N	160	94	**230**	**50**	46	5,4	□/	19,0	2 650	-10...+55	37 500 / 27 500		⑤
4656 N	160	94	**230**	**50**	47	5,5	/■	19,0	2 650	-40...+85	37 500 / 15 000		⑤
4840 N	85	50	**115**	**60**	26	4,1	□/	10,0	1 650	-10...+75	57 500 / 25 000		⑥
4800 N*	97	57	**115**	**60**	32	4,3	□/	9,0	1 750	-10...+75	60 000 / 27 500		⑦
4530 N*	151	89	**115**	**60**	45	5,4	□/	16,0	2 700	-10...+65	42 500 / 25 000		⑧
4500 N*	169	100	**115**	**60**	48	5,7	□/	15,0	3 000	-10...+65	47 500 / 25 000		⑨
4600 N	180	106	**115**	**60**	50	5,7	□/	18,0	3 100	-10...+60	40 000 / 25 000		⑩
4606 N	180	106	**115**	**60**	51	5,8	/■	18,0	3 100	-40...+90	40 000 / 15 000		⑩

Subject to alternations

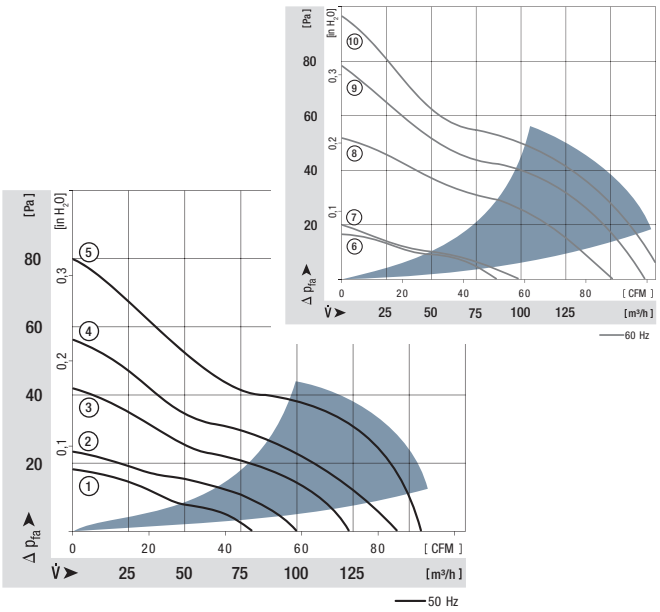

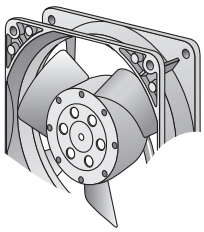

* Fan with 3 blades.

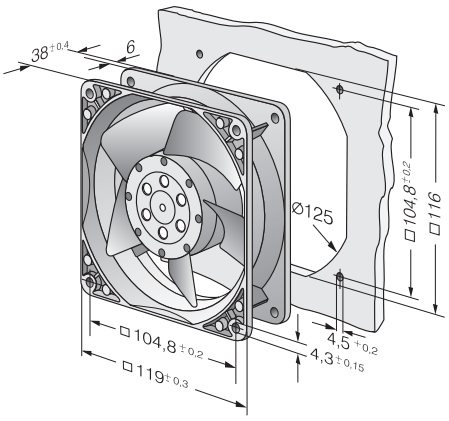

max. 180 m³/h

AC axial fans

Series 4000 Z 119 x 119 x 38 mm

- **Material:** Housing: Die-cast aluminium
  Impeller: Painted sheet steel
- **Direction of air flow:** Exhaust over struts
- **Direction of rotation:** Clockwise, seen on rotor
- **Connection:** Via 2 flat plug 2,8 x 0,5 mm
  grounding lug for M4 x 8
- **Mass:** 540 g
- **Note:**
  Please note our new ACmaxx series. With identical mounting dimensions and voltages, this series achieves higher energy efficiency. See page 188

- **Possible special versions:**
  (See page 12)
  - Speed signal
  - Protection against moisture
  - Protection against salt fog
  - Type of protection: IP 54 / IP 68

Nominal data	Air flow	Air flow	Nominal voltage	Frequency	Sound pressure level	Sound power level	Sintec sleeve bearings / Ball bearings	Input power	Nominal speed	Temperature range	Service life L_{10} at 40 °C	at T_{max}	Curve
Type	**m³/h**	**CFM**	**VAC**	**Hz**	**dB(A)**	**Bel(A)**	□/■	**Watts**	**rpm**	**°C**	**Hours**	**Hours**	
4850 Z	100	59	**230**	**50**	26	4,0	□/	13,0	1 700	-10...+65	50 000 /	27 500	①
4856 Z	100	59	**230**	**50**	26	4,0	/■	13,0	1 700	-40...+75	50 000 /	20 000	①
4580 Z	115	68	**230**	**50**	30	4,3	□/	13,0	1 900	-10...+65	50 000 /	27 500	②
4586 Z	115	68	**230**	**50**	30	4,3	/■	13,0	1 900	-40...+75	50 000 /	20 000	②
4650 Z	160	94	**230**	**50**	40	5,3	□/	19,0	2 650	-10...+50	37 500 /	30 000	③
4656 Z	160	94	**230**	**50**	40	5,3	/■	19,0	2 650	-40...+75	37 500 /	17 500	③
4800 Z	105	62	**115**	**60**	28	4,1	□/	12,0	1 800	-10...+70	52 500 /	25 000	④
4806 Z	105	62	**115**	**60**	28	4,1	/■	12,0	1 800	-40...+75	52 500 /	17 500	④
4530 Z	120	71	**115**	**60**	32	4,4	□/	12,0	2 000	-10...+70	52 500 /	25 000	⑤
4536 Z	120	71	**115**	**60**	32	4,4	/■	12,0	2 000	-40...+75	52 500 /	17 500	⑤
4600 Z	180	106	**115**	**60**	45	5,6	□/	18,0	3 100	-10...+60	40 000 /	25 000	⑥
4606 Z	180	106	**115**	**60**	45	5,6	/■	18,0	3 100	-40...+85	40 000 /	15 000	⑥

Subject to alternations

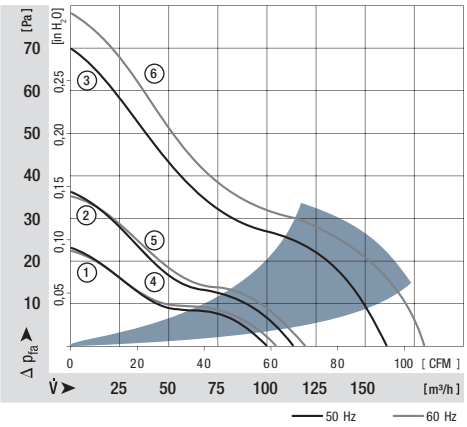

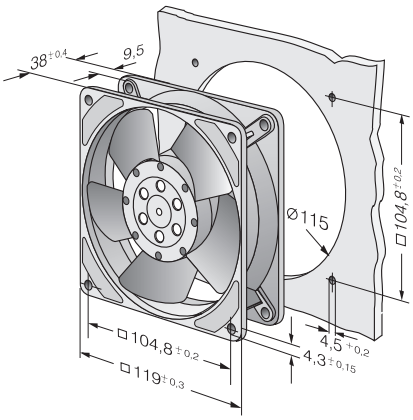

ebmpapst

max. 140 m³/h

AC axial fans

Series 4600 TZ Ø 108 x 37 mm

- **Material:** Impeller: Die-cast aluminium
  Mounting bracket: Metal
- **Direction of air flow:** Exhaust over mounting bracket
- **Direction of rotation:** Clockwise, seen on rotor
- **Connection:** Via 2 single wires
- **Mass:** 430 g

- **Possible special versions:**
  (See page 12)
  - Protection against moisture
  - Protection against salt fog
  - Type of protection: IP 54 / IP 68

Nominal data	Air flow	Air flow	Nominal voltage	Frequency	Sound pressure level	Sintec sleeve bearings / Ball bearings	Input power	Nominal speed	Temperature range	Service life L_{10} at 40 °C	at T_{max}
Type	**m³/h**	**CFM**	**VAC**	**Hz**	**dB(A)**	□/■	**Watts**	**rpm**	**°C**	**Hours**	**Hours**
4650 TZ	125	73,6	**230**	**50**	42	□/	19,0	2 600	-10...+50	37 500	30 000
4656 TZ	125	73,6	**230**	**50**	42	/■	19,0	2 600	-40...+65	37 500	20 000
4600 TZ	140	82,4	**115**	**60**	45	□/	18,0	2 950	-10...+50	40 000	32 500
4606 TZ	140	82,4	**115**	**60**	45	/■	18,0	2 950	-40...+75	40 000	17 500

Subject to alternations

The air flow and noise level of fans without external housing depends on the installation conditions. The stated air flow and noise has been measured with an orifice 109 mm Ø at a distance of approx. 17 mm from the mounting bracket. Under exceptionally favourable mounting conditions, the air flow of fan series 4000 Z is achievable. The noise in the optimal operating range can only be measured for these fans in a specific application.

Fan type		Lead wires
4650 TZ	4600 TZ	AWG 22, TR 32
4656 TZ	4606 TZ	AWG 18

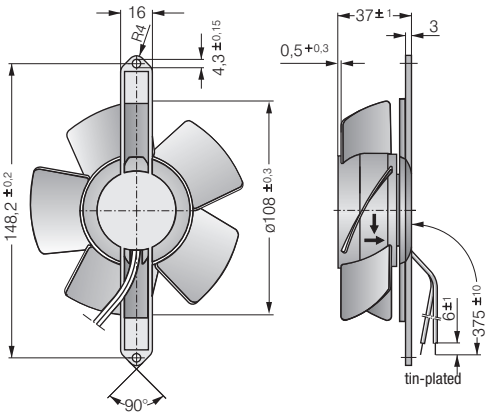

max. 206 m³/h

AC axial fans

Series 5900 127 x 127 x 38 mm

- **Material:** Housing: Die-cast aluminium
  Impeller: GRP[1)] (PA)
- **Direction of air flow:** Exhaust over struts
- **Direction of rotation:** Counter-clockwise, seen on rotor
- **Connection:** Via 2 flat plug 2,8 x 0,5 mm grounding lug for M4 x 6
- **Mass:** 570 g

- **Possible special versions:**
  (See page 12)
  - Protection against moisture

1) Fibreglass-reinforced plastic

Nominal data	Air flow	Air flow	Nominal voltage	Frequency	Sound pressure level	Sound power level	Sintec sleeve bearings / Ball bearings	Input power	Nominal speed	Temperature range	Service life L_{10} at 40 °C	at T_{max}	Curve
Type	**m³/h**	**CFM**	**VAC**	**Hz**	**dB(A)**	**Bel(A)**	□/■	**Watts**	**rpm**	**°C**	**Hours**	**Hours**	
5988	150	88	**230**	**50**	37	4,9	/■	13,0	2 250	-30...+55	35 000 / 20 000		①
5950	180	106	**230**	**50**	43	5,4	□/	18,0	2 700	-20...+50	40 000 / 32 500		③
5958	180	106	**230**	**50**	44	5,5	/■	18,0	2 750	-30...+60	40 000 / 25 000		③
5938	162	95	**115**	**60**	40	4,9	/■	12,0	2 500	-30...+55	35 000 / 20 000		②
5900	206	121	**115**	**60**	46	5,7	□/	17,0	3 050	-20...+55	42 500 / 30 000		④
5908	206	121	**115**	**60**	47	5,8	/■	17,0	3 100	-30...+75	42 500 / 20 000		④

Subject to alternations

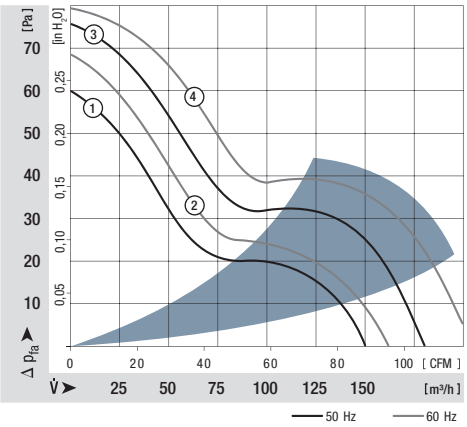

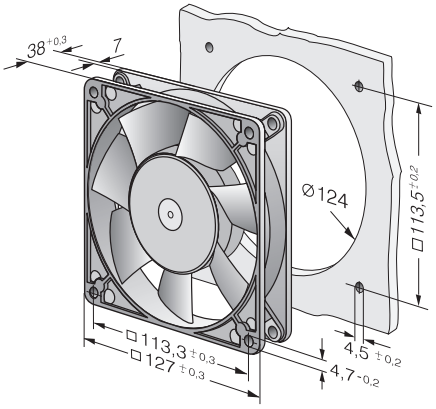

Guard grilles from p. 238
Connection cables p. 251

max. 270 m³/h

AC axial fans

Series 5600 135 x 135 x 38 mm

- **Material:** Housing: Die-cast aluminium
  Impeller: Painted sheet steel
- **Direction of air flow:** Exhaust over struts
- **Direction of rotation:** Counter-clockwise, seen on rotor
- **Connection:** Via 2 flat plug 2,8 x 0,5 mm grounding lug for M4 x 8
- **Mass:** 800 g

- **Possible special versions:**
  (See page 12)
  - Protection against moisture
  - Protection against salt fog
  - Type of protection: IP 54

Nominal data	Air flow	Air flow	Nominal voltage	Frequency	Sound pressure level	Sound power level	Sintec sleeve bearings / Ball bearings	Input power	Nominal speed	Temperature range	Service life L_{10} at 40 °C	at T_{max}	Curve
Type	**m³/h**	**CFM**	**VAC**	**Hz**	**dB(A)**	**Bel(A)**	**□/■**	**Watts**	**rpm**	**°C**	**Hours**	**Hours**	
5656 S	235	138	**230**	**50**	46	5,9	/■	30,0	2 700	-35...+70	45 000 / 20 000		①
5606 S	270	159	**115**	**60**	50	6,2	/■	26,0	3 100	-35...+80	47 500 / 20 000		②

Subject to alternations

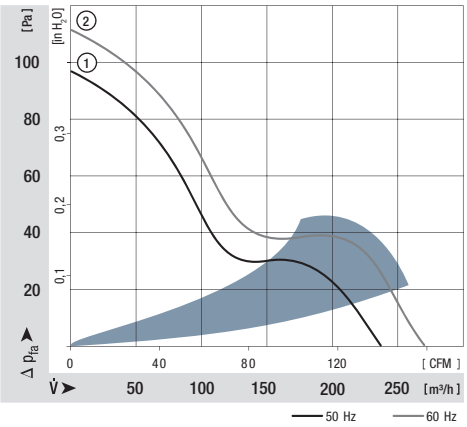

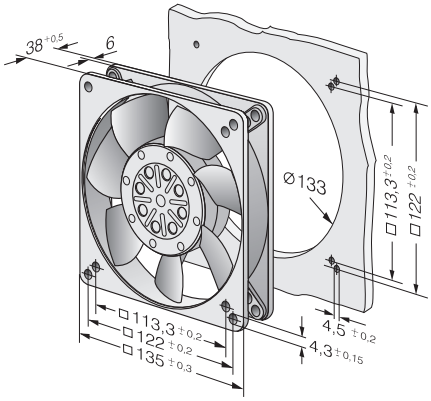

max. 380 m³/h

AC axial fans

Series 7000 150 x 172 x 38 mm

- **Material:** Housing: Die-cast aluminium
  Impeller: Painted sheet steel
- **Direction of air flow:** Exhaust over struts
- **Direction of rotation:** Counter-clockwise, seen on rotor
- **Connection:** Via 2 flat plug 2,8 x 0,5 mm
  grounding lug for M4 x 8
- **Mass:** 900 g
- **Note:**
  Please note our new ACmaxx series. With identical mounting dimensions and voltages, this series achieves higher energy efficiency.
  See page 190, 192, 193

Nominal data	Air flow	Air flow	Nominal voltage	Frequency	Sound pressure level	Sound power level	Sintec sleeve bearings / Ball bearings	Input power	Nominal speed	Temperature range	Service life L_{10} at 40 °C	at T_{max}	Curve
Type	**m³/h**	**CFM**	**VAC**	**Hz**	**dB(A)**	**Bel(A)**	**□/■**	**Watts**	**rpm**	**°C**	**Hours**	**Hours**	
7056 ES	320	188	**230**	**50**	51	6,4	/■	27,0	2 800	-25...+55	60 000 / 32 000		①
7006 ES	380	224	**115**	**60**	56	6,8	/■	28,0	3 350	-25...+65	55 000 / 18 000		②

Subject to alternations

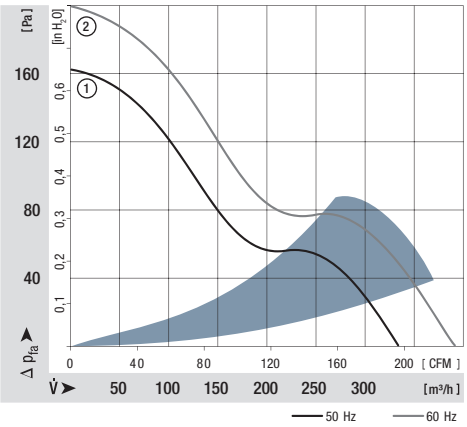

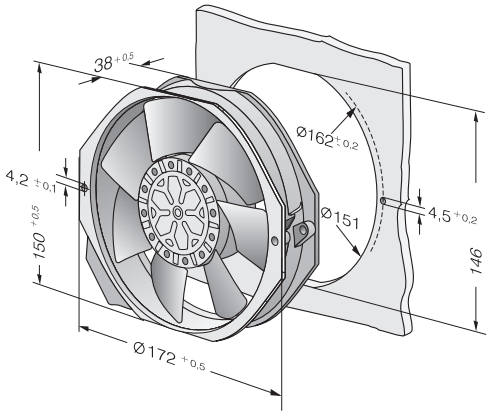

ebmpapst

max. 380 m³/h

AC axial fans

Series 7800 Ø 150 x 55 mm

- **Material:** Housing: Die-cast aluminium
  Impeller: Painted sheet steel
- **Direction of air flow:** Exhaust over struts
- **Direction of rotation:** Counter-clockwise, seen on rotor
- **Connection:** Via 2 single wires, wire ends with brass lead tips grounding lug for M4 x 8
- **Mass:** 1,1 kg
- **Note:**
  Please note our new ACmaxx series. With identical mounting dimensions and voltages, this series achieves higher energy efficiency. See page 190

Nominal data	Air flow	Air flow	Nominal voltage	Frequency	Sound pressure level	Sound power level	Sintec sleeve bearings / Ball bearings	Input power	Nominal speed	Temperature range	Service life L_{10} at 40 °C	at T_{max}	Curve
Type	**m³/h**	**CFM**	**VAC**	**Hz**	**dB(A)**	**Bel(A)**	□/■	**Watts**	**rpm**	**°C**	**Hours**	**Hours**	
7855 ES	325	191	**230**	**50**	49	6,0	/■	45,0	2 800	-25...+50	60 000 / 47 500		①
7856 ES	325	191	**230**	**50**	49	6,0	/■	45,0	2 800	-25...+70	60 000 / 30 000		①
7805 ES	380	224	**115**	**60**	53	6,4	/■	38,0	3 250	-25...+70	60 000 / 47 500		②
7806 ES	380	224	**115**	**60**	53	6,4	/■	38,0	3 250	-25...+90	60 000 / 15 000		②

Subject to alternations

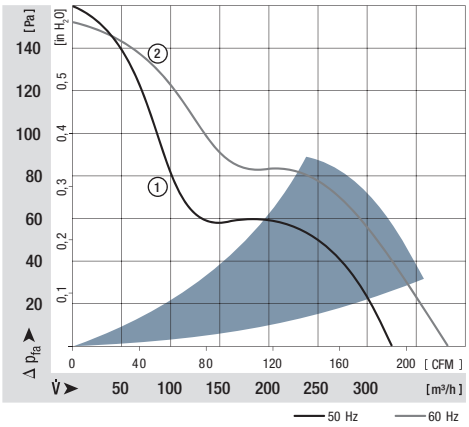

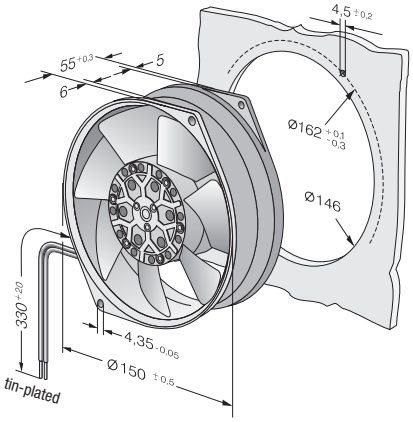

max. 425 m³/h

AC axial fans

Series 7400 Ø 150 x 55 mm

- **Material:** Housing: Die-cast aluminium
  Impeller: Painted sheet steel
- **Direction of air flow:** Intake over struts
- **Direction of rotation:** Counter-clockwise, seen on rotor
- **Connection:** Via 2 single wires, wire ends with brass lead tips grounding lug for M4 x 8
- **Mass:** 1,1 kg
- **Note:**
  Please note our new ACmaxx series. With identical mounting dimensions and voltages, this series achieves higher energy efficiency. See page 190

Nominal data	Air flow	Air flow	Nominal voltage	Frequency	Sound pressure level	Sound power level	Sintec sleeve bearings / Ball bearings	Input power	Nominal speed	Temperature range	Service life L_{10} at 40 °C	at T_{max}	Curve
Type	**m³/h**	**CFM**	**VAC**	**Hz**	**dB(A)**	**Bel(A)**	**□/■**	**Watts**	**rpm**	**°C**	**Hours**	**Hours**	
7450 ES	380	224	**230**	**50**	60	6,8	/■	47,0	2 700	-25...+50	63 000 / 50 000		①
7400 ES	425	250	**115**	**60**	62	6,9	/■	46,0	3 050	-25...+70	50 000 / 24 000		②

Subject to alternations

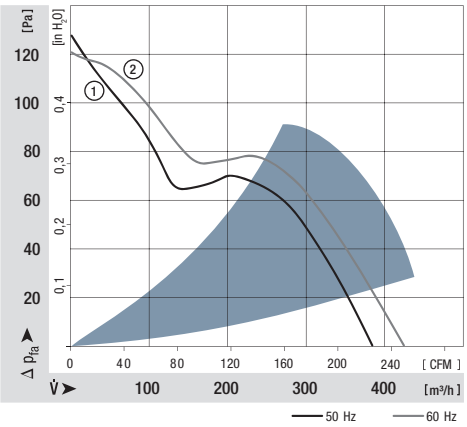

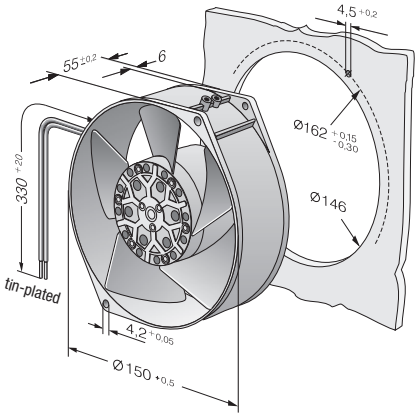

max. 500 m³/h

AC axial fans

Series 6000 Ø 172 x 51 mm

- **Material:** Housing: Die-cast aluminium
  Impeller: Painted sheet steel
- **Direction of air flow:** Exhaust over struts
- **Direction of rotation:** Counter-clockwise, seen on rotor
- **Connection:** Via 2 flat plug 2,8 x 0,5 mm
  grounding lug for M4 x 6
- **Mass:** 1,0 kg
- **Note:**
  Please note our new ACmaxx series. With identical mounting dimensions and voltages, this series achieves higher energy efficiency. See page 192,193

Nominal data	Air flow	Air flow	Nominal voltage	Frequency	Sound pressure level	Sound power level	Sintec sleeve bearings / Ball bearings	Input power	Nominal speed	Temperature range	Service life L_{10} at 40 °C	at T_{max}	Curve
Type	**m³/h**	**CFM**	**VAC**	**Hz**	**dB(A)**	**Bel(A)**	□/■	**Watts**	**rpm**	**°C**	**Hours**	**Hours**	
6058 ES	375	221	**230**	**50**	55	5,9	/■	24,0	2 800	-25...+70	62 000 /	31 000	①
6078 ES	420	247	**230**	**50**	54	6,3	/■	26,0	2 800	-25...+60	62 000 /	39 000	②
6008 ES	440	259	**115**	**60**	60	6,4	/■	26,0	3 300	-25...+70	57 000 /	28 000	③
6028 ES	500	284	**115**	**60**	58	6,7	/■	29,0	3 300	-25...+75	57 000 /	22 000	④

Subject to alternations

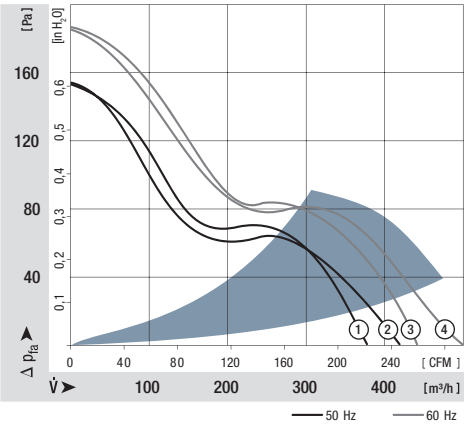

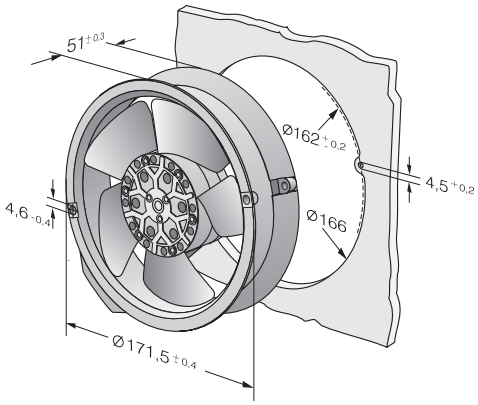

max. 1030 m³/h

AC axial fans

225 x 225 x 80 mm

- **Material:** Housing: Die-cast aluminium
  Impeller: Sheet steel
- **Number of blades:** 7
- **Direction of air flow:** Exhaust over struts
- **Direction of rotation:** Counter-clockwise, seen on rotor
- **Type of protection:** IP44, depending on installation and position
- **Insulation class:** "B"
- **Mounting position:** Any
- **Connection:** Terminal strips (operating capacitor connected)
- **Mass:** 2,0 kg
- **Operation mode:** Continuous operation (S1)
- **Bearings:** Maintenance-free ball bearings

Nominal data	Air flow	Air flow	Nominal voltage	Frequency	Sound pressure level	Sound power level	Sintec sleeve bearings / Ball bearings	Input power	Speed / rpm	Perm. amb. temp.	Service life L_{10} at 40 °C	at T_{max}	Curve
Type	**m³/h**	**CFM**	**VAC**	**Hz**	**dB(A)**	**Bel(A)**	**□/■**	**Watts**	**rpm**	**°C**	**Hours**	**Hours**	
W2E 200-HK86-01	1030	606	**115**	**60**	61	6,7	/■	80,0	2800	-25...+65	60 000 / 58 000		①
W2E 200-HK38-01	880	518	**230**	**50**	58	6,6	/■	64,0	2550	-25...+60	63 000 / 60 000		①

Subject to alternations

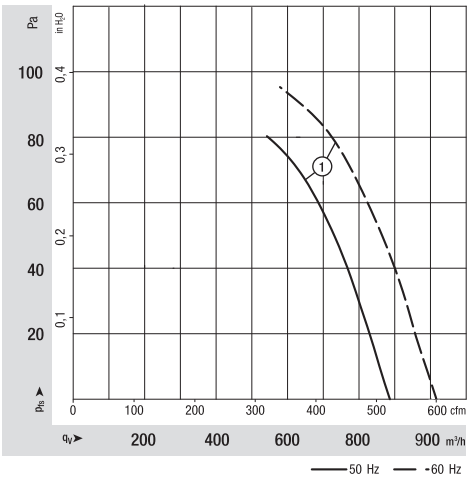

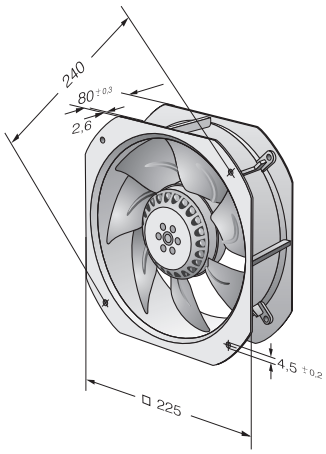

max. 1865 m³/h

AC axial fans

280 x 280 x 80 mm

- **Material:** Housing: Die-cast aluminium
  Impeller: Sheet steel
- **Number of blades:** 7
- **Direction of air flow:** Exhaust over struts
- **Direction of rotation:** Counter-clockwise, seen on rotor
- **Type of protection:** IP44, depending on installation and position
- **Insulation class:** "F"
- **Mounting position:** Any
- **Connection:** Terminal strips (operating capacitor connected)
- **Mass:** 2,0 kg
- **Operation mode:** Continuous operation (S1)
- **Bearings:** Maintenance-free ball bearings

Nominal data	Air flow	Air flow	Nominal voltage	Frequency	Sound pressure level	Sound power level	Sintec sleeve bearings / Ball bearings	Input power	Speed / rpm	Perm. amb. temp.	Service life L_{10} at 40 °C	at T_{max}	Curve
Type	**m³/h**	**CFM**	**VAC**	**Hz**	**dB(A)**	**Bel(A)**	□/■	**Watts**	**rpm**	**°C**	**Hours**	**Hours**	
W2E 250-HL06-01	1865	1077	**230**	**50**	66	7,2	/■	127,0	2 550	-25...+60	63 000 / 70 000		①
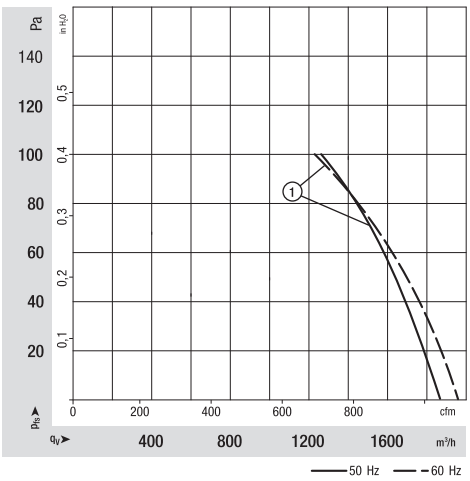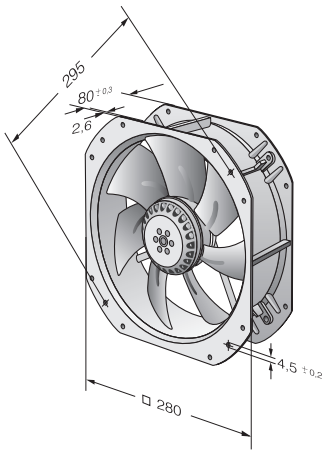
Subject to alternations