max. 33 m³/h

DC axial fans

Series 600 F 60 x 60 x 15 mm

- **Material:** Housing: GRP[1)] (PBT)
  Impeller: GRP[1)] (PA)
- **Direction of air flow:** Exhaust over struts
- **Direction of rotation:** Counter-clockwise, seen on rotor
- **Connection:** Via single wires AWG 28, TR 64
- **Highlights:** Some models are suitable for use at high ambient temperatures
- **Mass:** 30 g

1) Fibreglass-reinforced plastic

- **Possible special versions:**
  (See chapter DC fans - specials)
  - Speed signal
  - Go / No-go alarm
  - PWM control input
  - Protection against moisture

Nominal data	Air flow	Air flow	Nominal voltage	Voltage range	Sound pressure level	Sound power level	Sintec sleeve bearings / Ball bearings	Input power	Nominal speed	Temperature range	Service life L_{10} (20 °C) ebm-papst Standard / Service life L_{10} (60 °C) ebm-papst Standard	Life expectancy L_{10IPC} (40 °C) see page 17	Curve
Type	**m³/h**	**CFM**	**VDC**	**VDC**	**dB(A)**	**Bel(A)**	□/■	**Watts**	**rpm**	**°C**	**Hours**	**Hours**	
605 F	29	17,1	**5**	4,5...5,2	27	4,4	■	1,1	4 000	-20...+50	50 000 / 20 000	52 500	②
612 FL	19	11,2	**12**	11,5...13,2	16	3,6	■	0,4	2 650	-20...+70	50 000 / 20 000	52 500	①
612 F	29	17,1	**12**	10,8...13,2	27	4,4	■	1,0	3 900	-20...+70	50 000 / 20 000	52 500	②
612 FH	33	19,4	**12**	10,0...13,2	31	4,8	■	1,5	4 500	-20...+60	45 000 / 17 500	47 500	③
614 F	29	17,1	**24**	21,6...26,4	27	4,4	■	1,1	3 900	-20...+70	50 000 / 20 000	52 500	②
614 F/39 H-691	33	19,4	**24**	16...28	31	4,8	■	1,4	4 500	-20...+60	45 000 / 17 500	47 500	③
Model with temperature range up to +80 / 85 °C.													
612 FL-680	19	11,2	**12**	11,5...14	16	3,6	■	0,5	2 650	-20...+85	50 000 / 20 000	52 500	①
612 F-637	29	17,1	**12**	10,8...12,6	27	4,4	■	1,0	3 900	-20...+80	50 000 / 20 000	52 500	②

Subject to alternations

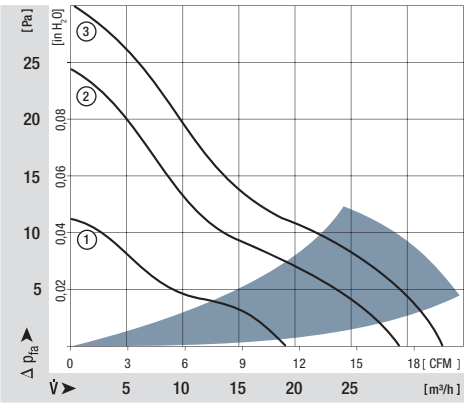

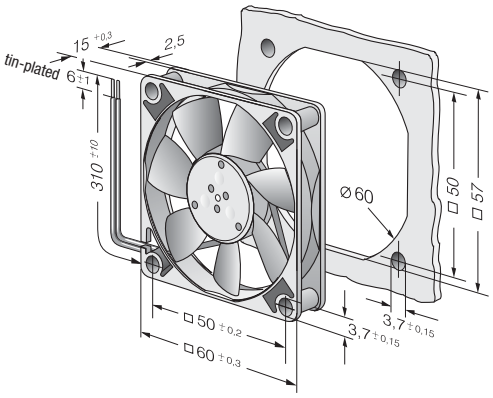

Guard grilles from p. 238

ebmpapst

max. 67 m³/h

DC axial fans

Series 620 60 x 60 x 25 mm

- **Material:** Housing: GRP[1)] (PBT)
  Impeller: GRP[1)] (PA)
- **Direction of air flow:** Exhaust over struts
- **Direction of rotation:** Clockwise, seen on rotor
- **Connection:** Via single wires AWG 22, TR 64
- **Highlights:** Very low-noise motor
- **Mass:** 85 g

- **Possible special versions:**
  (See chapter DC fans - specials)
  - Speed signal
  - Go / No-go alarm
  - Alarm with limit speed
  - External temperature sensor
  - Internal temperature sensor
  - PWM control input
  - Analogue control input
  - Protection against moisture

1) Fibreglass-reinforced plastic

Nominal data	Air flow	Air flow	Nominal voltage	Voltage range	Sound pressure level	Sound power level	Sintec sleeve bearings / Ball bearings	Input power	Nominal speed	Temperature range	Service life L_{10} (40 °C) ebm-papst Standard / Service life L_{10} (T_{max}) ebm-papst Standard	Life expectancy L_{10IPC} (40 °C) see page 17	Curve
Type	**m³/h**	**CFM**	**VDC**	**VDC**	**dB(A)**	**Bel(A)**	□ / ■	**Watts**	**rpm**	**°C**	**Hours**	**Hours**	
622 L	21	12,4	**12**	8...15	20	3,7	■	0,5	3 200	-20...+85	80 000 / 20 000	135 000	①
622 M	30	17,7	**12**	8...15	29	4,3	■	1,0	4 550	-20...+75	77 500 / 30 000	127 500	②
622 N	40	23,5	**12**	8...15	35	4,7	■	1,9	6 100	-20...+70	72 500 / 35 000	117 500	③
622 H	46	27,1	**12**	8...15	39	5,1	■	2,3	6 850	-20...+70	70 000 / 35 000	117 500	④
622 HH	56	33,0	**12**	8...15	43	5,6	■	3,5	8 200	-20...+70	65 000 / 32 500	110 000	⑤
622/2 H3P	67	39,4	**12**	8...13,2	48	5,9	■	8,0	9 700	-20...+60	52 500 / 32 500	87 500	⑥
624 L	21	12,4	**24**	18...28	20	3,7	■	1,0	3 200	-20...+70	80 000 / 40 000	135 000	①
624 M	30	17,7	**24**	12...28	29	4,3	■	1,5	4 550	-20...+70	77 500 / 37 500	130 000	②
624 N	40	23,5	**24**	12...28	35	4,7	■	2,2	6 100	-20...+70	72 500 / 35 000	117 500	③
624 H	46	27,1	**24**	18...28	39	5,1	■	2,4	6 850	-20...+70	70 000 / 35 000	117 500	④
624 HH	56	33,0	**24**	18...28	43	5,6	■	3,6	8 200	-20...+70	65 000 / 32 500	110 000	⑤
624/2 H3P	67	39,4	**24**	18...28	48	5,9	■	7,0	9 700	-20...+60	52 500 / 32 500	87 500	⑥
628 HH	56	33,0	**48**	36...60	43	5,6	■	4,2	8 200	-20...+70	65 000 / 32 500	110 000	⑤

Subject to alternations

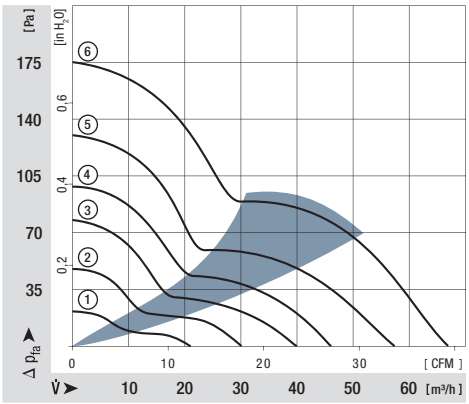

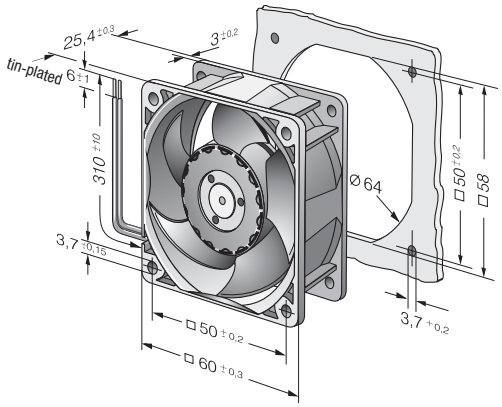

max. **44** m³/h

DC axial fans

Series 630 60 x 60 x 25 mm

- **Material:** Housing: GRP[1)] (PBT)
  Impeller: GRP[1)] (PA)
- **Direction of air flow:** Exhaust over struts
- **Direction of rotation:** Clockwise, seen on rotor
- **Connection:** Via single wires AWG 22, TR 64
- **Highlights:** Developed for applications with demanding environmental requirements
- **Mass:** 70 g

- **Possible special versions:**
  (See chapter DC fans - specials)
  - Speed signal
  - Go / No-go alarm
  - Alarm with limit speed
  - External temperature sensor
  - PWM control input
  - Analogue control input
  - Protection against moisture
  - Protection against salt fog
  - Type of protection: IP 54 / IP 68

1) Fibreglass-reinforced plastic

Nominal data	Air flow	Air flow	**Nominal voltage**	Voltage range	Sound pressure level	Sound power level	Sintec sleeve bearings / Ball bearings	Input power	Nominal speed	Temperature range	Service life L_{10} (40 °C) ebm-papst Standard / Service life L_{10} (T_{max}) ebm-papst Standard	Life expectancy L_{10IPC} (40 °C) see page 17	Curve
Type	**m³/h**	**CFM**	**VDC**	**VDC**	**dB(A)**	**Bel(A)**	□/■	**Watts**	**rpm**	**°C**	**Hours**	**Hours**	
632 NU	40	23,5	**12**	6...15	33	5,2	■	1,8	5 900	-20...+70	85 000 / 42 500	142 500	①
632/2 HPU	44	25,9	**12**	10,8...13,2	35	5,4	■	1,5	6 300	-20...+70	85 000 / 42 500	142 500	②
634 NU	40	23,5	**24**	12...30	34	5,1	■	1,6	5 900	-20...+70	85 000 / 42 500	142 500	①
638/2 HPU	44	25,9	**48**	40...60	35	5,4	■	1,8	6 300	-20...+70	85 000 / 42 500	142 500	②

Subject to alternations

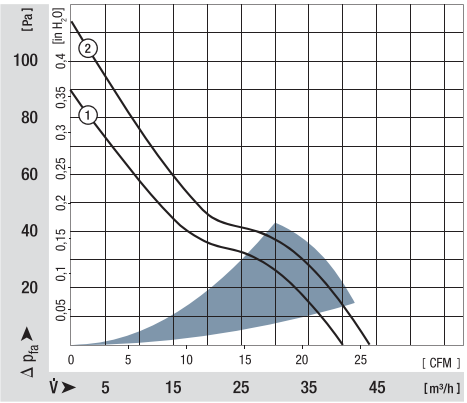

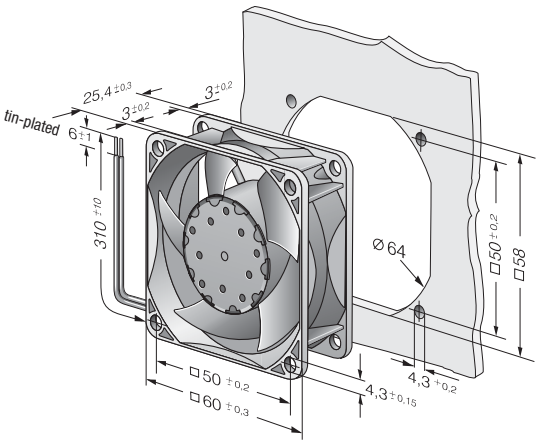

Guard grilles from p. 238

ebmpapst

max. 56 m³/h

DC axial fans

Series 600 N 60 x 60 x 25 mm

- **Material:** Housing: GRP[1)] (PBT)
  Impeller: GRP[1)] (PA)
- **Direction of air flow:** Exhaust over struts
- **Direction of rotation:** Clockwise, seen on rotor
- **Connection:** Via single wires AWG 22, TR 64
- **Highlights:** Some models are suitable for use at high ambient temperatures until 85 °C
- **Mass:** 66 g

- **Possible special versions:**
  (See chapter DC fans - specials)
  - Speed signal
  - Go / No-go alarm
  - Protection against moisture
  - Type of protection: IP 54 / IP 68

1) Fibreglass-reinforced plastic

Nominal data	Air flow	Air flow	Nominal voltage	Voltage range	Sound pressure level	Sound power level	Sintec sleeve bearings / Ball bearings	Input power	Nominal speed	Temperature range	Service life L_{10} (40 °C) ebm-papst Standard / Service life L_{10} (T_{max}) ebm-papst Standard	Life expectancy L_{10IPC} (40 °C) see page 17	Curve
Type	m³/h	CFM	VDC	VDC	dB(A)	Bel(A)	□/■	Watts	rpm	°C	Hours	Hours	
612 NGLE	21	12,4	**12**	8...15	16	3,6	□	0,6	2 500	-20...+85	80 000 / 27 500	135 000	①
612 NLE	21	12,4	**12**	8...15	16	3,6	■	0,4	2 500	-20...+85	80 000 / 27 500	135 000	①
612 NGMLE	25	14,7	**12**	8...15	19	3,9	□	0,7	3 000	-20...+80	80 000 / 32 500	135 000	②
612 NMLE	25	14,7	**12**	8...15	19	3,9	■	0,4	3 000	-20...+85	80 000 / 27 500	135 000	②
612 NGME	35	20,6	**12**	8...15	28	4,6	□	1,2	4 100	-20...+75	80 000 / 35 000	135 000	③
612 NME	35	20,6	**12**	8...15	28	4,6	■	0,8	4 100	-20...+75	80 000 / 35 000	135 000	③
612 NN	42	24,7	**12**	8...15	35	5,0	■	1,5	5 100	-20...+70	70 000 / 35 000	117 500	④
612 NH	43	25,3	**12**	8...15	37	5,3	■	1,8	5 600	-20...+70	70 000 / 35 000	117 500	⑤
612 NHH-118	56	33,0	**12**	8...15	41	5,7	■	2,9	6 800	-20...+70	60 000 / 30 000	102 500	⑥
614 NGL	21	12,4	**24**	18...28	16	3,6	□	1,0	2 500	-20...+70	80 000 / 40 000	135 000	①
614 NL	21	12,4	**24**	18...28	16	3,6	■	0,8	2 500	-20...+70	80 000 / 40 000	135 000	①
614 NGML	25	14,7	**24**	18...28	19	3,9	□	1,2	3 000	-20...+70	80 000 / 40 000	135 000	②
614 NML	25	14,7	**24**	18...28	19	3,9	■	1,0	3 000	-20...+70	80 000 / 40 000	135 000	②
614 NGM	35	20,6	**24**	18...28	28	4,6	□	1,7	4 100	-20...+70	80 000 / 40 000	135 000	③
614 NM	35	20,6	**24**	18...28	28	4,6	■	1,3	4 100	-20...+70	80 000 / 40 000	135 000	③
614 NN	42	24,7	**24**	18...28	35	5,0	■	1,8	5 100	-20...+70	70 000 / 35 000	117 500	④
614 NH	43	25,3	**24**	18...26	37	5,3	■	2,1	5 600	-20...+70	70 000 / 35 000	117 500	⑤
614 NHH	56	33,0	**24**	18...26	41	5,7	■	2,9	6 850	-20...+70	60 000 / 30 000	102 500	⑥
614 NHH-119	56	33,0	**24**	18...28	41	5,7	■	2,9	6 850	-20...+70	60 000 / 30 000	102 500	⑥
618 NM	35	20,6	**48**	36...56	28	4,6	■	1,9	4 100	-20...+70	80 000 / 40 000	135 000	③
618 NN	42	24,7	**48**	36...56	35	5,0	■	2,1	5 100	-20...+65	70 000 / 40 000	117 500	④

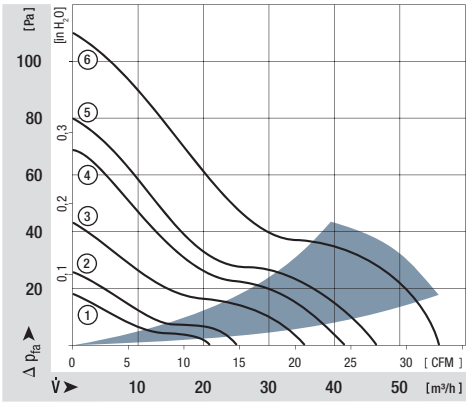

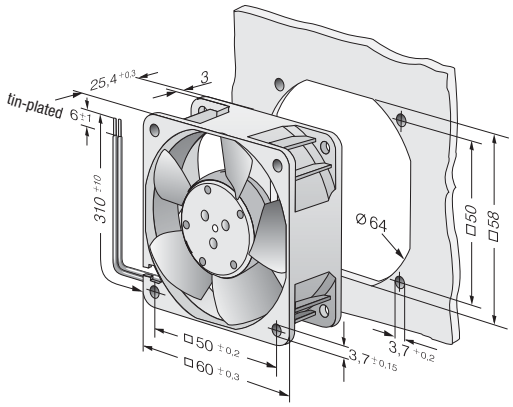

max. 41 m³/h

DC axial fans

Series 600 N VARIOFAN 60 x 60 x 25 mm

- **Material:** Housing: GRP[1)] (PBT)
  Impeller: GRP[1)] (PA)
- **Direction of air flow:** Exhaust over struts
- **Direction of rotation:** Clockwise, seen on rotor
- **Connection:** Via single wires AWG 22, TR 64
- **Highlights:** Automatic speed adjustment with temperature sensor
- **Mass:** 66 g

- **Possible special versions:**
  (See chapter DC fans - specials)
  - Speed signal
  - Go / No-go alarm
  - External temperature sensor
  - Internal temperature sensor
  - Protection against moisture

1) Fibreglass-reinforced plastic

	Nominal data	Air flow	Air flow	Nominal voltage	Voltage range	Sound pressure level	Sound power level	Sintec sleeve bearings / Ball bearings	Input power	Nominal speed	Temperature range	Service life L_{10} (40 °C) ebm-papst Standard	Service life L_{10} (T_{max}) ebm-papst Standard	Life expectancy L_{10IPC} (40 °C) see page 17	Curve
	Type	m³/h	CFM	VDC	VDC	dB(A)	Bel(A)	□/■	Watts	rpm	°C	Hours		Hours	
30°C / 55°C	612 NGMI	18	10,6	12	8...12,6	14	3,5	□	1,3	2 150	-20...+65	80 000 / 45 000		135 000	①
		35	20,6			28	4,6		1,7	4 100					②
30°C / 55°C	612 NMI	16	9,4	12	8...12,6	16	3,6	■	1,0	2 400	-20...+65	80 000 / 45 000		135 000	③
		35	20,6			28	4,6		1,4	4 100					④
30°C / 55°C	612 NGNI	23	13,5	12	8...12,6	18	3,8	□	1,7	2 900	-20...+65	70 000 / 40 000		117 500	⑤
		41	24,1			35	5,0		2,4	5 100					⑥
30°C / 55°C	612 NNI	23	13,5	12	8...12,6	18	3,8	■	1,2	2 900	-20...+65	70 000 / 40 000		117 500	⑤
		41	24,1			35	5,0		1,5	5 100					⑥
30°C / 55°C	612 NGNV	23	13,5	12	8...12,6	18	3,8	□	1,7	2 900	-20...+65	70 000 / 40 000		117 500	⑤
		41	24,1			35	5,0		2,4	5 100					⑥

Subject to alternations

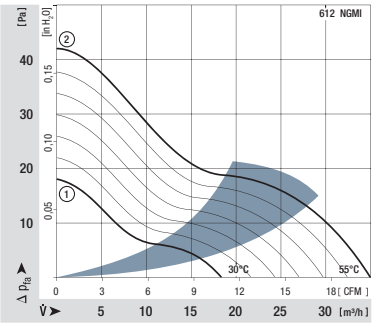

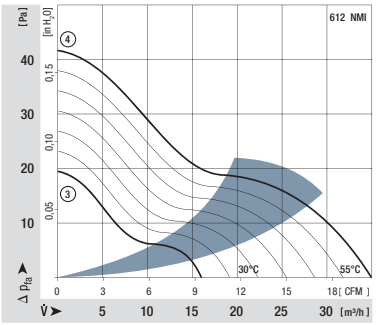

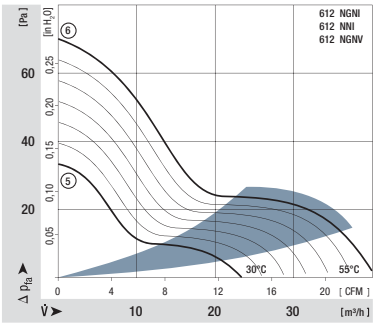

V-Types

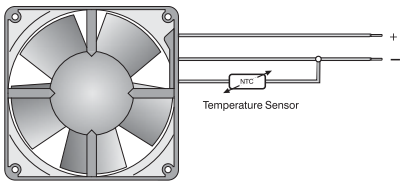

The temperature sensor for controlling the motor speed is not included in delivery.
Temperature sensor LZ 370 see accessories.

I-Types

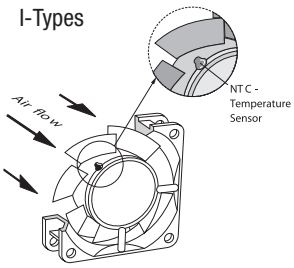

Temperature sensor (NTC-resistor) for controlling the motor speed is positioned directly in the air flow.

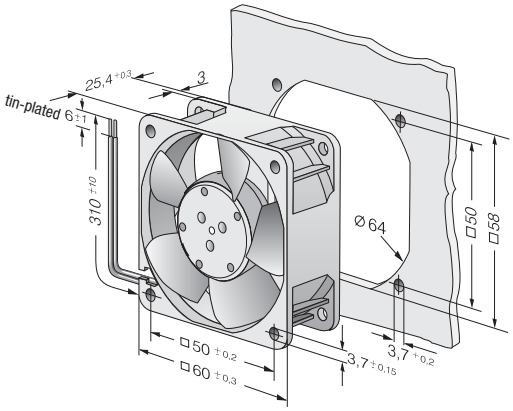

Guard grilles from p. 238

max. 82 m³/h

DC axial fans

Series 600 J 60 x 60 x 32 mm

- **Material:** Housing: GRP[1)] (PBT)
  Impeller: GRP[1)] (PA)
- **Direction of air flow:** Exhaust over struts
- **Direction of rotation:** Clockwise, seen on rotor
- **Connection:** Via single wires AWG 24, TR 64
- **Mass:** 100 g

- **Possible special versions:**
  (See chapter DC fans - specials)
  - Speed signal
  - Go / No-go alarm
  - Alarm with limit speed
  - External temperature sensor
  - PWM control input
  - Analogue control input
  - Protection against moisture

1) Fibreglass-reinforced plastic

Nominal data	Air flow	Air flow	Nominal voltage	Voltage range	Sound pressure level	Sound power level	Sintec sleeve bearings Ball bearings	Input power	Nominal speed	Temperature range	Service life L_{10} (40 °C) ebm-papst Standard / Service life L_{10} (T_{max}) ebm-papst Standard	Life expectancy L_{10}IPC (40 °C) see page 17	Curve
Type	**m³/h**	**CFM**	**VDC**	**VDC**	**dB(A)**	**Bel(A)**	**□ / ■**	**Watts**	**rpm**	**°C**	**Hours**	**Hours**	
612 JH	70	41,1	**12**	7...13,6	53	6,4	■	7,7	11 700	-20...+70	57 500 / 27 500	97 500	①
614 JH	70	41,1	**24**	14...26,4	53	6,4	■	7,7	11 700	-20...+70	57 500 / 27 500	97 500	①
618 JH	70	41,1	**48**	36...56	53	6,4	■	7,7	11 700	-20...+70	57 500 / 27 500	97 500	①
Fan types with streamer and integrated guard grille.													
614 J/2 HHP	82	48,3	**24**	18...30	62	7,6	■	14,6	15 000	-20...+75	65 000 / 25 000	110 000	②
618 J/2 HHP	82	48,3	**48**	38...58	62	7,6	■	14,6	15 000	-20...+75	65 000 / 25 000	110 000	②

Subject to alternations

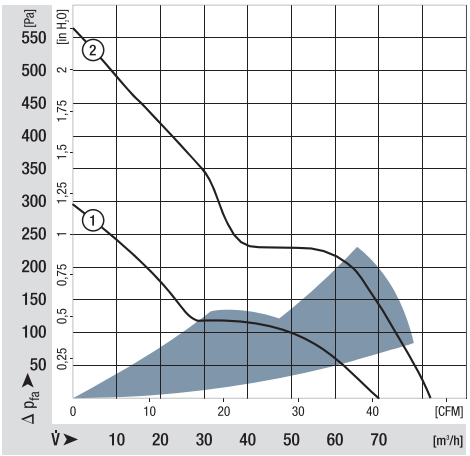

Rear view of types 614 J/2HHP and 618 J/2HHP

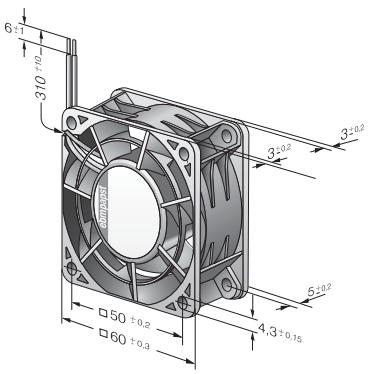

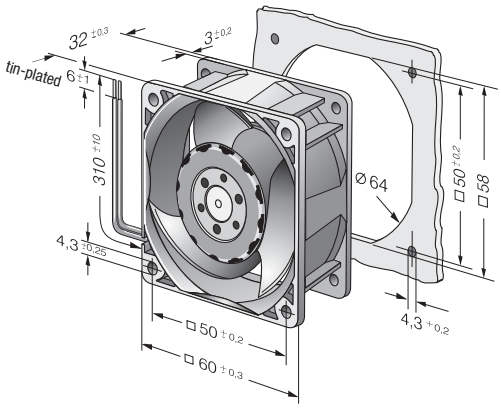

max. **44** m³/h

DC axial fans

Series 700 F 70 x 70 x 15 mm

- **Material:** Housing: GRP[1)] (PBT)
  Impeller: GRP[1)] (PA)
- **Direction of air flow:** Exhaust over struts
- **Direction of rotation:** Counter-clockwise, seen on rotor
- **Connection:** Via single wires AWG 24 to AWG 28, TR 64
- **Mass:** 53 g

- **Possible special versions:**
  (See chapter DC fans - specials)
  - Speed signal
  - Go / No-go alarm
  - Protection against moisture

1) Fibreglass-reinforced plastic

Nominal data	Air flow	Air flow	**Nominal voltage**	Voltage range	Sound pressure level	Sound power level	Sintec sleeve bearings / Ball bearings	Input power	Nominal speed	Temperature range	Service life L_{10} (40 °C) ebm-papst Standard / Service life L_{10} (T_{max}) ebm-papst Standard	Life expectancy L_{10IPC} (40 °C) see page 17	Curve
Type	**m³/h**	**CFM**	**VDC**	**VDC**	**dB(A)**	**Bel(A)**	□/■	**Watts**	**rpm**	**°C**	**Hours**	**Hours**	
712 F/2L-005*	28	16,5	**12**	8...13,8	25	4,7	■	0,6	3 300	-20...+70	60 000 / 30 000	102 500	①
712 F/2M-006*	36	21,2	**12**	8...13,8	32	5,0	■	1,1	4 300	-20...+70	60 000 / 30 000	102 500	②
712 F	44	25,9	**12**	8...13,8	38	5,3	■	1,7	5 300	-20...+70	60 000 / 30 000	102 500	③
714 F	44	25,9	**24**	18...28	38	5,3	■	1,5	5 300	-20...+70	60 000 / 30 000	102 500	③

Subject to alternations

*Version with 3-pin

Molex plug housing	22-01-2035
Molex Contacts	08-50-0113

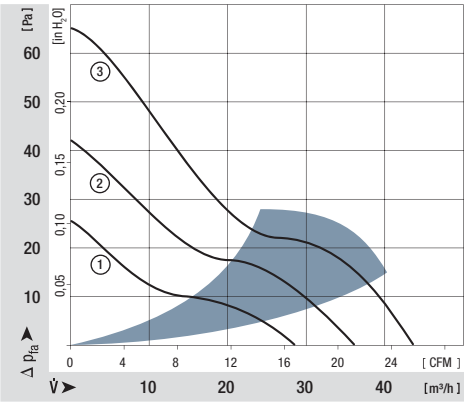

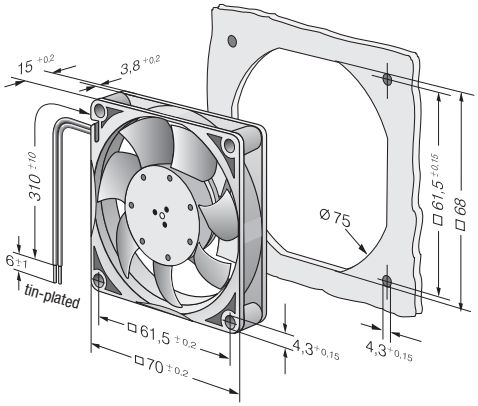

Guard grilles from p. 238

max. 117 m³/h

DC axial fans

Series 8450 80 x 80 x 25 mm

- **Material:** Housing: GRP[1)] (PBT)
  Impeller: GRP[1)] (PA)
- **Direction of air flow:** Exhaust over struts
- **Direction of rotation:** Counter-clockwise, seen on rotor
- **Connection:** Via single wires AWG 24, TR 64
- **Highlights:** Very low-noise motor
- **Mass:** 105 g

- **Possible special versions:**
  (See chapter DC fans - specials)
  - Speed signal
  - Go / No-go alarm
  - Alarm with limit speed
  - External temperature sensor
  - Internal temperature sensor
  - PWM control input
  - Analogue control input
  - Protection against moisture

1) Fibreglass-reinforced plastic

Nominal data	Air flow	Air flow	Nominal voltage	Voltage range	Sound pressure level	Sound power level	Sintec sleeve bearings / Ball bearings	Input power	Nominal speed	Temperature range	Service life L_{10} (40 °C) ebm-papst Standard / Service life L_{10} (T_{max}) ebm-papst Standard	Life expectancy L_{10IPC} (40 °C) see page 17	Curve
Type	**m³/h**	**CFM**	**VDC**	**VDC**	**dB(A)**	**Bel(A)**	□ / ■	**Watts**	**rpm**	**°C**	**Hours**	**Hours**	
8452 GL	32	18,8	**12**	8...15	14	3,3	□	0,4	1 700	-20...75	80 000 / 35 000	135 000	①
8452 GM	58	34,1	**12**	8...15	32	4,7	□	1,3	3 100	-20...75	80 000 / 35 000	135 000	②
8452 GN	68	40,0	**12**	8...15	36	5,0	□	1,8	3 600	-20...70	70 000 / 35 000	117 500	③
Models with 25 kHz PWM control and speed signal to 4-wire specification (see page 175).													
8452/2 GHP	75	44,1	**12**	10,8...13,2	38	5,3	□	2,5	4 000	-20...70	70 000 / 35 000	117 500	④
8452/2 GHHP	83	48,8	**12**	10,8...13,2	42	5,5	□	3,5	4 400	-20...60	65 000 / 40 000	110 000	⑤
Models with 1-30 kHz PWM control and speed signal.													
8452/2 H4P	117	68,8	**12**	8...15	50	6,4	■	6,8	6 200	-20...70	60 000 / 30 000	102 500	⑥
8454/2 H4P	117	68,8	**24**	20,0...26,4	50	6,4	■	6,8	6 200	-20...70	60 000 / 30 000	102 500	⑥

Subject to alternations

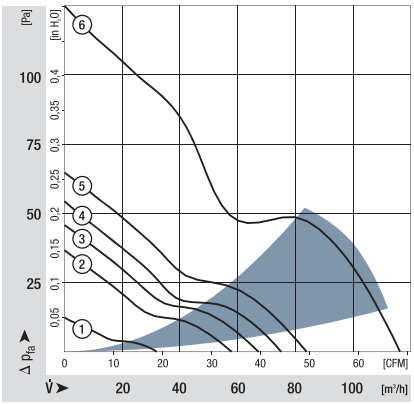

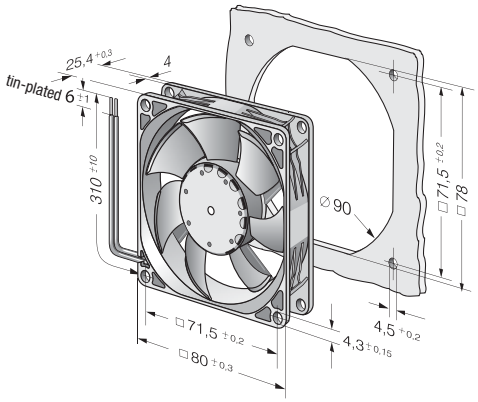

max. 79 m³/h

DC axial fans

Series 8400 N 80 x 80 x 25 mm

- **Material:** Housing: GRP[1)] (PBT)
  Impeller: GRP[1)] (PA)
- **Direction of air flow:** Exhaust over struts
- **Direction of rotation:** Counter-clockwise, seen on rotor
- **Connection:** Via single wires AWG 24, TR 64
- **Highlights:** Some models are suitable for use at high ambient temperatures until 85 °C
- **Mass:** 95 g

- **Possible special versions:**
  (See chapter DC fans - specials)
  - Speed signal
  - Go / No-go alarm
  - Alarm with limit speed
  - External temperature sensor
  - Internal temperature sensor
  - PWM control input
  - Analogue control input
  - Protection against moisture
  - Type of protection: IP 54 / IP 68

1) Fibreglass-reinforced plastic

Nominal data	Air flow	Air flow	Nominal voltage	Voltage range	Sound pressure level	Sound power level	Sintec sleeve bearings / Ball bearings	Input power	Nominal speed	Temperature range	Service life L_{10} (40 °C) ebm-papst Standard / Service life L_{10} (T_{max}) ebm-papst Standard	Life expectancy L_{10IPC} (40 °C) see page 17	Curve
Type	m³/h	CFM	VDC	VDC	dB(A)	Bel(A)	□/■	Watts	rpm	°C	Hours	Hours	
8412 NGLE	33	19,4	**12**	8...15	12	3,5	□	0,5	1 500	-20...+85	80 000 / 27 500	135 000	①
8412 NLE	33	19,4	**12**	8...15	17	3,7	■	0,3	1 500	-20...+85	80 000 / 27 500	135 000	①
8412 NGMLE	45	26,5	**12**	8...15	19	3,9	□	0,9	2 050	-20...+80	80 000 / 32 500	135 000	②
8412 NMLE	45	26,5	**12**	8...15	21	4,0	■	0,6	2 050	-20...+85	80 000 / 27 500	135 000	②
8412 NGME	58	34,1	**12**	8...15	26	4,3	□	1,4	2 600	-20...+75	80 000 / 35 000	135 000	③
8412 NME	58	34,1	**12**	8...15	27	4,4	■	1,0	2 600	-20...+75	80 000 / 35 000	135 000	③
8412 NG	69	40,6	**12**	8...15	32	4,7	□	2,0	3 100	-20...+70	70 000 / 35 000	117 500	④
8412 N	69	40,6	**12**	8...15	32	4,7	■	1,7	3 100	-20...+70	70 000 / 35 000	117 500	④
8412 NH	79	46,5	**12**	8...13,2	37	5,0	■	2,1	3 600	-20...+70	70 000 / 35 000	117 500	⑤
8412 NH-217	79	46,5	**12**	8...15	37	5,0	■	2,5	3 600	-20...+70	70 000 / 35 000	117 500	⑤
8414 NGL	33	19,4	**24**	18...28	12	3,5	□	0,9	1 500	-20...+70	80 000 / 40 000	135 000	①
8414 NL	33	19,4	**24**	18...28	17	3,7	■	0,8	1 500	-20...+70	80 000 / 40 000	135 000	①
8414 NGML	45	26,5	**24**	18...28	19	3,9	□	1,2	2 050	-20...+70	80 000 / 40 000	135 000	②
8414 NML	45	26,5	**24**	18...28	21	4,0	■	1,1	2 050	-20...+70	80 000 / 40 000	135 000	②
8414 NGM	58	34,1	**24**	18...28	26	4,3	□	1,4	2 600	-20...+70	80 000 / 40 000	135 000	③
8414 NM	58	34,1	**24**	18...28	27	4,4	■	1,4	2 600	-20...+70	80 000 / 40 000	135 000	③
8414 NG	69	40,6	**24**	18...28	32	4,7	□	2,2	3 100	-20...+70	70 000 / 35 000	117 500	④
8414 N	69	40,6	**24**	18...28	32	4,7	■	1,8	3 100	-20...+70	70 000 / 35 000	117 500	④
8414 NH	79	46,5	**24**	18...26	37	5,0	■	2,4	3 600	-20...+70	70 000 / 35 000	117 500	⑤
8414 NH-221	79	46,5	**24**	18...28	37	5,0	■	2,2	3 600	-20...+70	70 000 / 35 000	117 500	⑤
8418 N	69	40,6	**48**	36...56	32	4,7	■	2,0	3 100	-20...+70	70 000 / 35 000	117 500	④

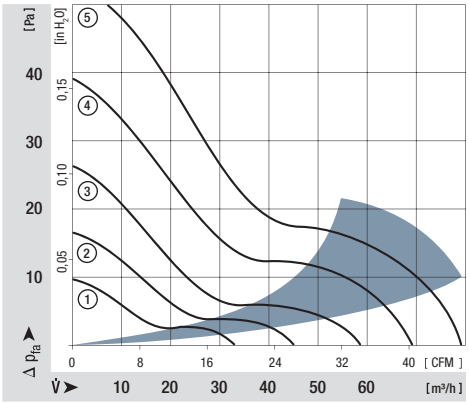

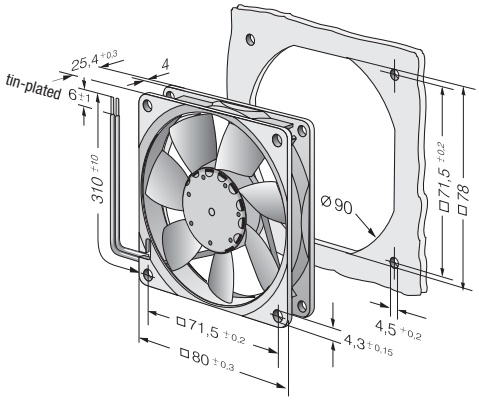

Guard grilles
from p. 238

ebmpapst

max. 58 m³/h

DC axial fans

Series 8400 N VARIOFAN 80 x 80 x 25 mm

- **Material:** Housing: GRP[1)] (PBT)
  Impeller: GRP[1)] (PA)
- **Direction of air flow:** Exhaust over struts
- **Direction of rotation:** Counter-clockwise, seen on rotor
- **Connection:** Via single wires AWG 24, TR 64
- **Highlights:** Automatic speed adjustment with temperature sensor
- **Mass:** 95 g

- **Possible special versions:**
  (See chapter DC fans - specials)
  - Speed signal
  - Go / No-go alarm
  - External temperature sensor
  - Internal temperature sensor
  - Protection against moisture

1) Fibreglass-reinforced plastic

Nominal data		Air flow	Air flow	Nominal voltage	Voltage range	Sound pressure level	Sound power level	Sintec sleeve bearings / Ball bearings	Input power	Nominal speed	Temperature range	Service life L_{10} (40 °C) ebm-papst Standard / Service life L_{10} (T_{max}) ebm-papst Standard	Life expectancy L_{10IPC} (40 °C) see page 17	Curve
Type		m³/h	CFM	VDC	VDC	dB(A)	Bel(A)	□/■	Watts	rpm	°C	Hours	Hours	
30°C	8412 NGLV	20	11,8	12	10...14	< 10	< 3	■	0,9	900	-20...+65	80 000 / 45 000	135 000	①
50°C		33	19,4			12	3,5		1,1	1 500				②
30°C	8412 NGMLV	27	15,9	12	8...14	< 10	3,0	■	1,1	1 200	-20...+65	80 000 / 45 000	135 000	③
50°C		45	26,6			19	3,9		1,5	2 050				④
30°C	8412 NGMI	35	20,6	12	8...14	< 13	3,5	■	1,4	1 600	-20...+65	80 000 / 45 000	135 000	⑤
50°C		58	34,1			26	4,3		2,0	2 600				⑥

Subject to alternations

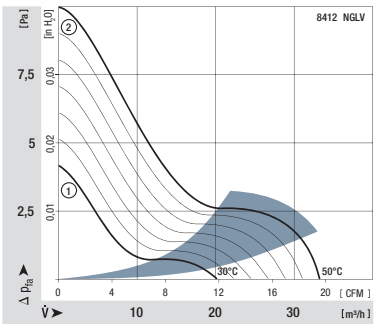

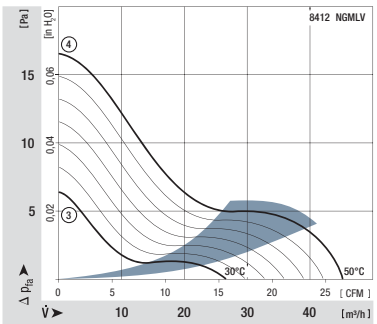

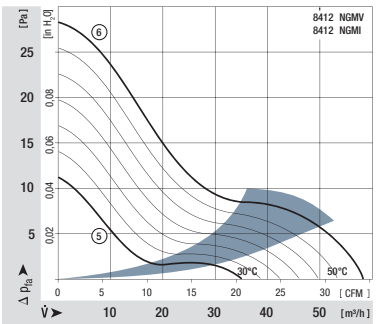

V-Types

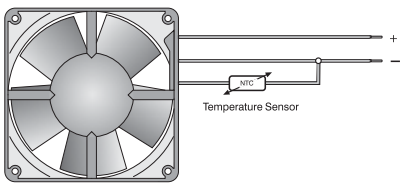

The temperature sensor for controlling the motor speed is not included in delivery.
Temperature sensor LZ 370 see accessories.

I-Types

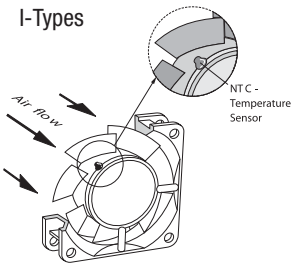

Temperature sensor (NTC-resistor) for controlling the motor speed is positioned directly in the air flow.

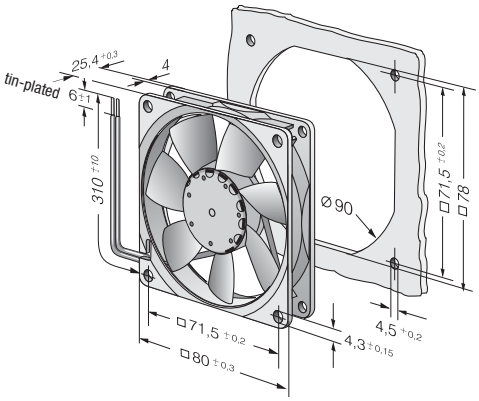

max. 80 m³/h

DC axial fans

Series 8300 80 x 80 x 32 mm

- **Material:** Housing: GRP[1)] (PBT)
  Impeller: GRP[1)] (PA)
- **Direction of air flow:** Exhaust over struts
- **Direction of rotation:** Clockwise, seen on rotor
- **Connection:** Via single wires AWG 22, TR 64
- **Mass:** 170 g

1) Fibreglass-reinforced plastic

- **Possible special versions:**
  (See chapter DC fans - specials)
  - Speed signal
  - Go / No-go alarm
  - Alarm with limit speed
  - External temperature sensor
  - Internal temperature sensor
  - PWM control input
  - Analogue control input
  - Protection against moisture
  - Protection against fog
  - Type of protection: IP 54 / IP 68

Nominal data	Air flow	Air flow	Nominal voltage	Voltage range	Sound pressure level	Sound power level	Sintec sleeve bearings / Ball bearings	Input power	Nominal speed	Temperature range	Service life L_{10} (40 °C) ebm-papst Standard / Service life L_{10} (T_{max}) ebm-papst Standard	Life expectancy L_{10IPC} (40 °C) see page 17	Curve
Type	**m³/h**	**CFM**	**VDC**	**VDC**	**dB(A)**	**Bel(A)**	□/■	**Watts**	**rpm**	**°C**	**Hours**	**Hours**	
8312 L	32	18,8	**12**	6...15	24	4,0	■	1,2	2 000	-20...+75	80 000 / 32 500	135 000	①
8312 M	48	28,3	**12**	6...15	34	5,0	■	2,2	3 000	-20...+75	70 000 / 27 500	117 500	②
8312	54	31,8	**12**	6...15	36	5,2	■	2,6	3 300	-20...+75	70 000 / 27 500	117 500	③
8312 HL	67	39,4	**12**	6...15	43	5,8	■	4,0	4 200	-20...+75	62 500 / 25 000	105 000	④
8312 H	80	47,1	**12**	6...12,6	48	6,2	■	6,4	5 000	-20...+60	55 000 / 35 000	92 500	⑤
8314 L	32	18,8	**24**	12...31,5	24	4,0	■	1,0	2 000	-20...+75	80 000 / 32 500	135 000	①
8314 M	48	28,3	**24**	12...31,5	34	5,0	■	2,3	3 000	-20...+75	70 000 / 27 500	117 500	②
8314	54	31,8	**24**	12...31,5	36	5,2	■	2,7	3 300	-20...+75	70 000 / 27 500	117 500	③
8314 HL	67	39,4	**24**	12...31,5	43	5,8	■	4,3	4 200	-20...+75	62 500 / 25 000	105 000	④
8314 H	80	47,1	**24**	12...28	48	6,2	■	6,0	5 000	-20...+75	55 000 / 22 500	92 500	⑤
8318	54	31,8	**48**	36...60	36	5,2	■	3,0	3 300	-20...+75	70 000 / 27 500	117 500	③
8318 HL	67	39,4	**48**	36...60	43	5,8	■	4,2	4 200	-20...+75	62 500 / 25 000	105 000	④
8318 H	80	47,1	**48**	36...60	48	6,2	■	6,2	5 000	-20...+65	55 000 / 30 000	92 500	⑤

Subject to alternations

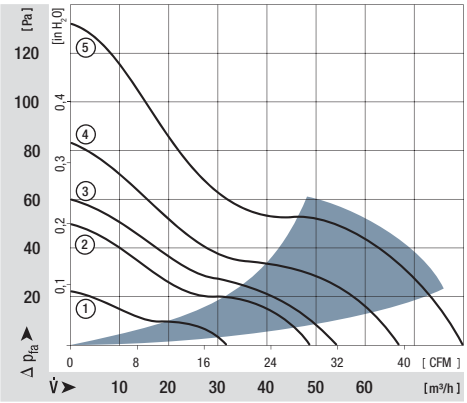

Rotor protrusion max. 0,4 mm.

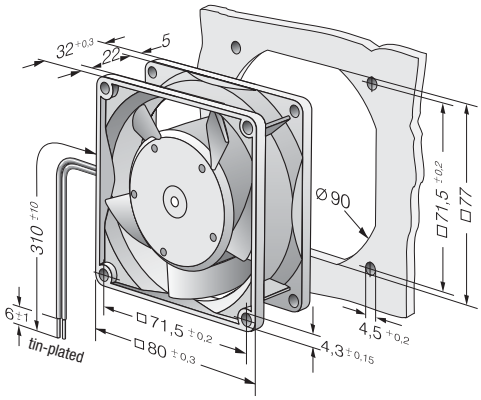

Guard grilles
from p. 238

ebmpapst

max. 222 m³/h

DC axial fans

Series 8200 J 80 x 80 x 38 mm

- **Material:** Housing: GRP[1)] (PBT)
  Impeller: GRP[1)] (PA)
- **Direction of air flow:** Exhaust over struts
- **Direction of rotation:** Counter-clockwise, seen on rotor
- **Connection:** Via single wires AWG 24 (H3 and H4: AWG 22), TR 64
- **Mass:** 160 g (H3 and H4: 200 g)

- **Possible special versions:**
  (See chapter DC fans - specials)
  - Speed signal
  - Go / No-go alarm
  - Alarm with limit speed
  - External temperature sensor
  - Internal temperature sensor
  - PWM control input
  - Analogue control input
  - Protection against moisture
  - Type of protection: IP 54 / IP 68

1) Fibreglass-reinforced plastic

Nominal data	Air flow	Air flow	Nominal voltage	Voltage range	Sound pressure level	Sound power level	Sintec sleeve bearings / Ball bearings	Input power*	Nominal speed	Temperature range	Service life L_{10} (40 °C) ebm-papst Standard / Service life L_{10} (T_{max}) ebm-papst Standard	Life expectancy L_{10IPC} (40 °C) see page 17	Curve
Type	**m³/h**	**CFM**	**VDC**	**VDC**	**dB(A)**	**Bel(A)**	□ / ■	**Watts**	**rpm**	**°C**	**Hours**	**Hours**	
8212 JN	132	78	**12**	7...13,8	55	6,6	■	10	8400	-20...+70	62 500 / 32 500	105 000	①
8212 JH3 *S-Force*	190	112	**12**	6...13,8	66	7,3	■	26*	12 000	-20...+70	55 000 / 27 500	92 500	②
8212 JH4 *S-Force*	222	131	**12**	6...13,8	71	7,8	■	39*	14 000	-20...+70	50 000 / 25 000	85 000	③
8214 JN	132	78	**24**	18...26,4	55	6,6	■	11	8400	-20...+70	62 500 / 32 500	105 000	①
8214 JH3 *S-Force*	190	112	**24**	12...27,6	66	7,3	■	26*	12 000	-20...+70	55 000 / 27 500	92 500	②
8214 JH4 *S-Force*	222	131	**24**	12...27,6	71	7,8	■	38*	14 000	-20...+70	50 000 / 25 000	85 000	③
8218 JN	132	78	**48**	36...53	55	6,6	■	11	8400	-20...+70	62 500 / 32 500	105 000	①
8218 JH3 *S-Force*	190	112	**48**	36...53	66	7,3	■	25*	12 000	-20...+70	55 000 / 27 500	92 500	②
8218 JH4 *S-Force*	222	131	**48**	20...58	71	7,8	■	36*	14 000	-20...+70	50 000 / 25 000	85 000	③

Subject to alternations

8200 JH3 and JH4 also available as standard with PWM control input and speed signal.
Speed control range from 2000 rpm up to maximum nominal speed. Stationary at 0 % PWM, maximum speed at sensor break.
* Input power at free air flow, these values can be significantly higher in the operating point.

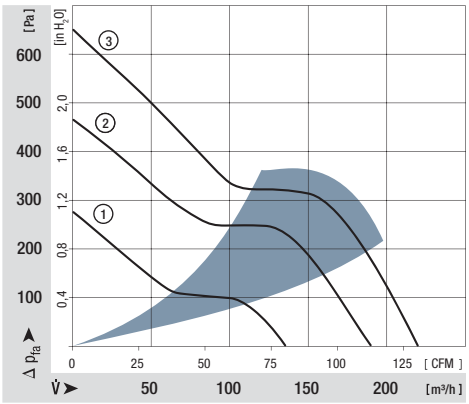

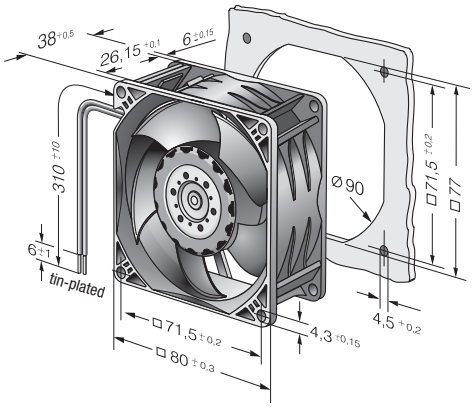

max. 102 m³/h

DC axial fans

Series 3400 N 92 x 92 x 25 mm

- **Material:** Housing: GRP[1)] (PBT)
  Impeller: GRP[1)] (PA)
- **Direction of air flow:** Exhaust over struts
- **Direction of rotation:** Counter-clockwise, seen on rotor
- **Connection:** Via single wires AWG 24, TR 64
- **Mass:** 100 g

- **Possible special versions:**
  (See chapter DC fans - specials)
  - Speed signal
  - Go / No-go alarm
  - Alarm with limit speed
  - External temperature sensor
  - Internal temperature sensor
  - PWM control input
  - Analogue control input
  - Protection against moisture
  - Type of protection: IP 54 / IP 68

1) Fibreglass-reinforced plastic

Nominal data	Air flow	Air flow	Nominal voltage	Voltage range	Sound pressure level	Sound power level	Sintec sleeve bearings / Ball bearings	Input power	Nominal speed	Temperature range	Service life L_{10} (40 °C) ebm-papst Standard / Service life L_{10} (T_{max}) ebm-papst Standard	Life expectancy L_{10IPC} (40 °C) see page 17	Curve
Type	m³/h	CFM	VDC	VDC	dB(A)	Bel(A)	□/■	Watts	rpm	°C	Hours	Hours	
3412 NGLE	61	35,9	**12**	8...15	23	4,0	□	1,1	1 950	-20...+80	80 000 / 22 500	135 000	①
3412 NLE	61	35,9	**12**	8...15	23	4,0	■	0,8	1 950	-20...+85	80 000 / 17 500	135 000	①
3412 NGME	72	42,4	**12**	8...15	28	4,3	□	1,6	2 300	-20...+75	75 000 / 27 500	127 500	②
3412 NME	72	42,4	**12**	8...15	28	4,3	■	1,1	2 300	-20...+75	75 000 / 27 500	127 500	②
3412 NG	84	49,4	**12**	8...15	32	4,7	□	1,9	2 700	-20...+70	70 000 / 35 000	117 500	③
3412 N	84	49,4	**12**	8...15	32	4,7	■	1,7	2 700	-20...+70	70 000 / 35 000	117 500	③
3412 NGH	94	55,3	**12**	8...15	36	5,0	□	2,3	3 000	-20...+70	70 000 / 35 000	117 500	④
3412 NH	94	55,3	**12**	8...15	36	5,0	■	2,1	3 000	-20...+70	70 000 / 35 000	117 500	④
3412 NGHH	102	60,0	**12**	8...13,2	39	5,1	□	3,2	3 250	-20...+60	70 000 / 45 000	127 500	⑤
3412 NHH	102	60,0	**12**	8...13,2	39	5,1	■	2,9	3 250	-20...+60	70 000 / 45 000	127 500	⑤
3412 NHH-379	102	60,0	**12**	8...15	39	5,1	■	2,7	3 250	-20...+70	70 000 / 35 000	117 500	⑤
3414 NGL	61	35,9	**24**	18...28	23	4,0	□	1,4	1 950	-20...+70	80 000 / 40 000	135 000	①
3414 NL	61	35,9	**24**	18...28	23	4,0	■	1,1	1 950	-20...+70	80 000 / 40 000	135 000	①
3414 NGM	72	42,4	**24**	18...28	28	4,3	□	1,7	2 300	-20...+70	75 000 / 37 500	127 500	②
3414 NM	72	42,4	**24**	18...28	28	4,3	■	1,4	2 300	-20...+70	75 000 / 37 500	127 500	②
3414 NG	84	49,4	**24**	18...28	32	4,7	□	2,5	2 700	-20...+70	70 000 / 35 000	117 500	③
3414 N	84	49,4	**24**	18...28	32	4,7	■	2,1	2 700	-20...+70	70 000 / 35 000	117 500	③
3414 NGH	94	55,3	**24**	18...26	36	5,0	□	3,0	3 000	-20...+70	70 000 / 35 000	117 500	④
3414 NH	94	55,3	**24**	18...26	36	5,0	■	2,3	3 000	-20...+70	70 000 / 35 000	117 500	④
3414 NGHH	102	60,0	**24**	18...26	39	5,1	□	3,2	3 250	-20...+70	70 000 / 35 000	117 500	⑤
3414 NGHH-389	102	60,0	**24**	18...28	39	5,1	□	3,2	3 250	-20...+70	70 000 / 35 000	117 500	⑤
3414 NHH	102	60,0	**24**	18...26	39	5,1	■	3,1	3 250	-20...+70	70 000 / 35 000	117 500	⑤
3414 NHH-386	102	60,0	**24**	18...28	39	5,1	■	3,2	3 250	-20...+70	70 000 / 35 000	117 500	⑤
3418 N	84	49,4	**48**	36...56	32	4,7	■	2,4	2 700	-20...+70	70 000 / 35 000	117 500	③

Other 48 VDC models on request.

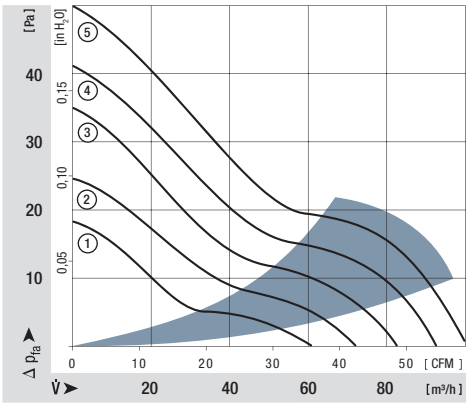

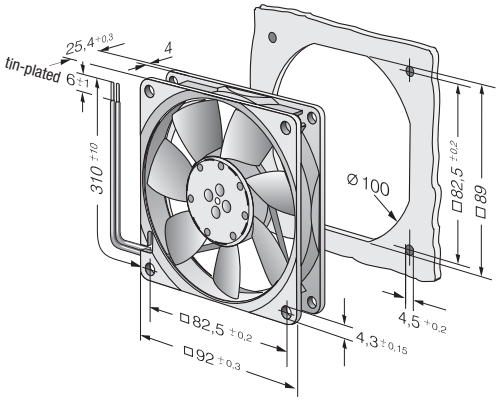

Guard grilles from p. 238

ebmpapst

max. 84 m³/h

DC axial fans

Series 3400 N VARIOFAN 92 x 92 x 25 mm

- **Material:** Housing: GRP[1)] (PBT)
  Impeller: GRP[1)] (PA)
- **Direction of air flow:** Exhaust over struts
- **Direction of rotation:** Counter-clockwise, seen on rotor
- **Connection:** Via single wires AWG 24, TR 64
- **Highlights:** Automatic speed adjustment with temperature sensor
- **Mass:** 100 g

- **Possible special versions:**
  (See chapter DC fans - specials)
  - Speed signal
  - Go / No-go alarm
  - External temperature sensor
  - Internal temperature sensor
  - Protection against moisture

1) Fibreglass-reinforced plastic

Nominal data		Air flow	Air flow	Nominal voltage	Voltage range	Sound pressure level	Sound power level	Sintec sleeve bearings Ball bearings	Input power	Nominal speed	Temperature range	Service life L_{10} (40 °C) ebm-papst Standard	Service life L_{10} (T_{max}) ebm-papst Standard	Life expectancy L_{10IPC} (40 °C) see page 17	Curve
Type		m³/h	CFM	VDC	VDC	dB(A)	Bel(A)	□/■	Watts	rpm	°C	Hours		Hours	
30°C	3412 NGMV	44	25,9	12	8...14	14	3,5	□	1,5	1 400	-20...+65	75 000 / 42 500		127 500	①
50°C		72	42,4			28	4,3		2,0	2 300					②
30°C	3412 NGV	50	29,4	12	8...12,6	16	3,7	□	1,6	1 600	-20...+65	75 000 / 42 500		127 500	③
50°C		84	49,4			32	4,7		2,5	2 700					④

Subject to alternations

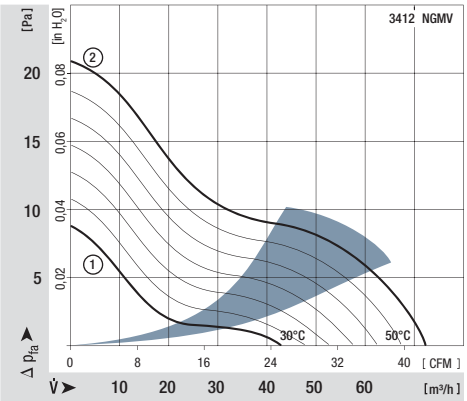

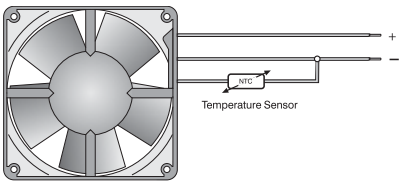

The temperature sensor for controlling the motor speed is not included in delivery.
Temperature sensor LZ 370 see accessories.

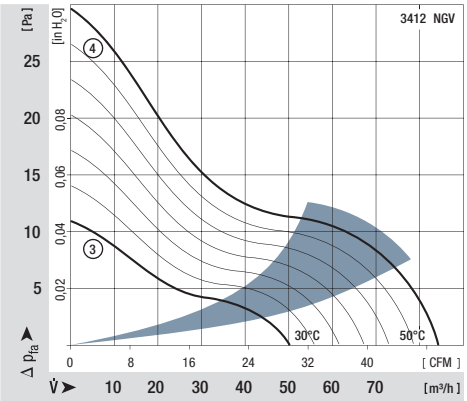

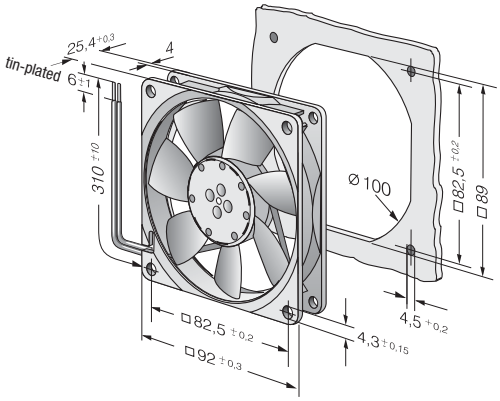

max. 107 m³/h

DC axial fans

Series 3300 92 x 92 x 32 mm

- **Material:** Housing: GRP[1)] (PBT)
  Impeller: GRP[1)] (PA)
- **Direction of air flow:** Exhaust over struts
- **Direction of rotation:** Clockwise, seen on rotor
- **Connection:** Via single wires AWG 22, TR 64
- **Mass:** 190 g

- **Possible special versions:**
  (See chapter DC fans - specials)
  - Speed signal
  - Go / No-go alarm
  - Alarm with limit speed
  - External temperature sensor
  - Internal temperature sensor
  - PWM control input
  - Analogue control input
  - Protection against moisture
  - Protection against salt fog
  - Type of protection: IP 54 / IP 68

1) Fibreglass-reinforced plastic

Nominal data	Air flow	Air flow	Nominal voltage	Voltage range	Sound pressure level	Sound power level	Sintec sleeve bearings / Ball bearings	Input power	Nominal speed	Temperature range	Service life L_{10} (40 °C) ebm-papst Standard / Service life L_{10} (T_{max}) ebm-papst Standard	Life expectancy L_{10IPC} (40 °C) see page 17	Curve
Type	m³/h	CFM	VDC	VDC	dB(A)	Bel(A)	□/■	Watts	rpm	°C	Hours	Hours	
3312 L	56	33,0	**12**	6...15	29	4,5	■	1,5	2 150	-20...+75	80 000 / 35 000	135 000	①
3312 GM	68	40,0	**12**	6...15	34	4,8	□	1,8	2 600	-20...+75	70 000 / 30 000	117 500	②
3312 M	68	40,0	**12**	6...15	34	4,8	■	1,8	2 600	-20...+75	70 000 / 30 000	117 500	②
3312	80	47,1	**12**	6...15	37	5,2	■	2,5	3 000	-20...+75	70 000 / 30 000	117 500	③
3312-177	93	54,7	**12**	6...15	43	5,7	■	3,5	3 400	-20...+75	65 000 / 27 500	110 000	⑤
3314 G	80	47,1	**24**	12...28	37	5,2	□	2,5	3 000	-20...+75	70 000 / 30 000	117 500	③
3314	80	47,1	**24**	12...28	37	5,2	■	2,5	3 000	-20...+75	70 000 / 30 000	117 500	③
3314-140	85	50,0	**24**	12...28	40	5,4	■	3,0	3 200	-20...+75	70 000 / 30 000	117 500	④
3314 H	107	63,0	**24**	12...28	47	6,0	■	5,0	4 000	-20...+75	57 500 / 25 000	97 500	⑥
3318	80	47,1	**48**	36...60	37	5,2	■	2,4	3 000	-20...+75	70 000 / 30 000	117 500	③
3318 H	107	63,0	**48**	36...60	47	6,0	■	4,9	4 000	-20...+60	57 500 / 32 500	97 500	⑥

Subject to alternations

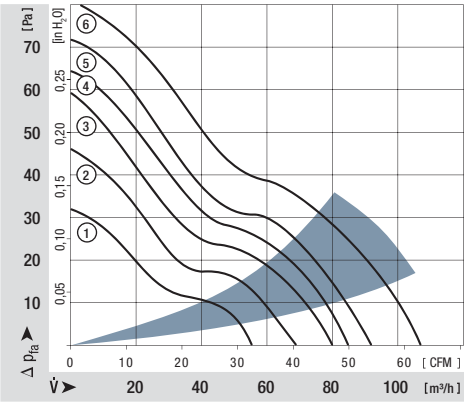

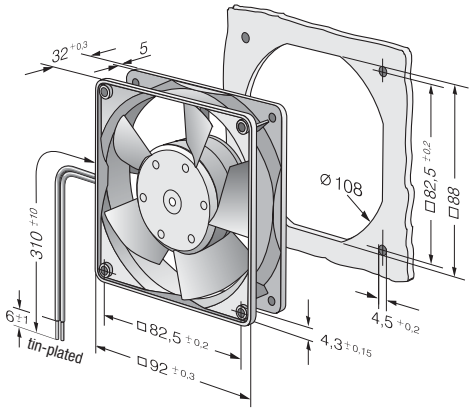

Guard grilles
from p. 238

ebmpapst

max. 133 m³/h

DC axial fans

Series 3300 N 92 x 92 x 32 mm

- **Material:** Housing: GRP[1)] (PBT)
  Impeller: GRP[1)] (PA)
- **Direction of air flow:** Exhaust over struts
- **Direction of rotation:** Clockwise, seen on rotor
- **Connection:** Via single wires AWG 24
  UL 1061, TR 64
- **Mass:** 190 g

- **Possible special versions:**
  (See chapter DC fans - specials)
  - Speed signal
  - Go / No-go alarm
  - External temperature sensor
  - Internal temperature sensor
  - PWM control input
  - Analogue control input
  - Protection against moisture
  - Protection against salt fog
  - Type of protection: IP 54 / IP 68

1) Fibreglass-reinforced plastic

	Nominal data	Air flow	Air flow	Nominal voltage	Voltage range	Sound pressure level	Sound power level	Sintec sleeve bearings Ball bearings	Input power	Nominal speed	Temperature range	Service life L_{10} (40 °C) ebm-papst Standard / Service life L_{10} (T_{max}) ebm-papst Standard	Life expectancy L_{10IPC} (40 °C) see page 17	Curve
	Type	m³/h	CFM	VDC	VDC	dB(A)	Bel(A)	□/■	Watts	rpm	°C	Hours	Hours	
NEW	3312 NL	56	33	**12**	6...15	24	4,1	■	0,8	1 850	-20...+75	80 000 / 35 000	135 000	①
NEW	3312 NM	68	40	**12**	6...15	29	4,5	■	1,3	2 250	-20...+75	70 000 / 30 000	117 500	②
NEW	3312 NN	80	47	**12**	6...15	35	4,7	■	1,8	2 650	-20...+75	70 000 / 30 000	117 500	③
NEW	3312 NH	93	54	**12**	6...15	38	5,1	■	2,8	3 050	-20...+75	65 000 / 27 500	110 000	④
NEW	3312 NHH	107	63	**12**	6...15	42	5,4	■	3,4	3 450	-20...+75	57 500 / 25 000	97 500	⑤
NEW	3312 NH3	133	78	**12**	6...14	50	6,0	■	6,7	4 350	-20...+70	50 000 / 25 000	85 000	⑥
NEW	3314 NN	80	47	**24**	18...28	35	4,7	■	1,8	2 650	-20...+75	70 000 / 30 000	117 500	③
NEW	3314 NH	93	54	**24**	18...28	38	5,1	■	2,6	3 050	-20...+75	65 000 / 27 500	110 000	④
NEW	3314 NHH	107	63	**24**	18...28	42	5,4	■	3,5	3 450	-20...+75	57 500 / 25 000	97 500	⑤
NEW	3314 NH3	133	78	**24**	18...28	50	6,0	■	6,7	4 350	-20...+75	50 000 / 22 500	85 000	⑥
NEW	3318 NN	80	47	**48**	36...60	35	4,7	■	1,8	2 650	-20...+75	70 000 / 30 000	117 500	③
NEW	3318 NH	93	54	**48**	36...60	38	5,1	■	3,5	3 050	-20...+75	65 000 / 27 500	110 000	④
NEW	3318 NH3	133	78	**48**	36...58	50	6,0	■	6,5	4 350	-20...+75	50 000 / 22 500	85 000	⑥

Subject to alternations

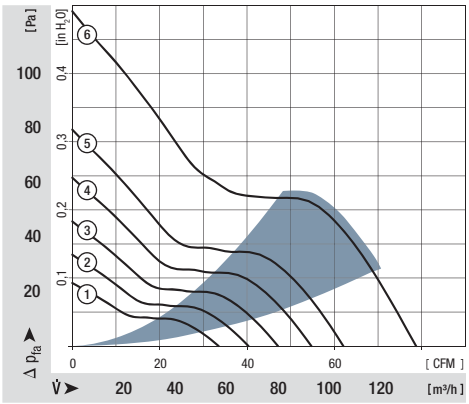

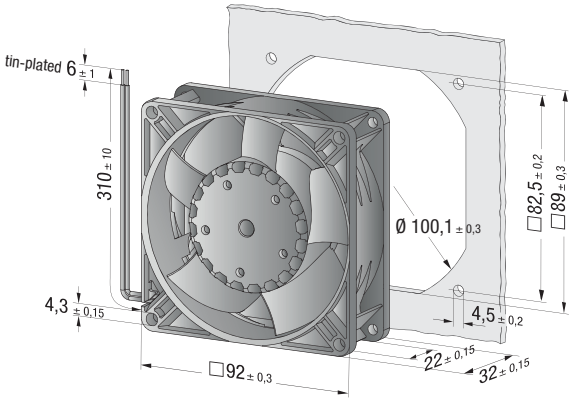

max. 280 m³/h

DC axial fans

Series 3200 J 92 x 92 x 38 mm

- **Material:** Housing: GRP[1)] (PBT)
  Impeller: GRP[1)] (PA)
- **Direction of air flow:** Exhaust over struts
- **Direction of rotation:** Clockwise, seen on rotor
- **Connection:** Via single wires AWG 24 (H3 and H4: AWG 22), TR 64
- **Mass:** 240 g (H3 and H4: 280 g)

- **Possible special versions:**
  (See chapter DC fans - specials)
  - Speed signal
  - Go / No-go alarm
  - Alarm with limit speed
  - External temperature sensor
  - Internal temperature sensor
  - PWM control input
  - Analogue control input
  - Protection against moisture
  - Type of protection: IP 54 / IP 68

1) Fibreglass-reinforced plastic

Nominal data	Air flow	Air flow	Nominal voltage	Voltage range	Sound pressure level	Sound power level	Sintec sleeve bearings / Ball bearings	Input power*	Nominal speed	Temperature range	Service life L_{10} (40 °C) ebm-papst Standard / Service life L_{10} (T_{max}) ebm-papst Standard	Life expectancy L_{10IPC} (40 °C) see page 17	Curve
Type	**m³/h**	**CFM**	**VDC**	**VDC**	**dB(A)**	**Bel(A)**	□/■	**Watts**	**rpm**	**°C**	**Hours**	**Hours**	
3212 JN	130	76,5	**12**	7...13,8	51	6,1	■	7,5	6 000	-20 ...+70	70 000 / 35 000	117 500	①
3212 JH	146	86,0	**12**	7...15	55	6,4	■	9,0	6 800	-20 ...+70	70 000 / 35 000	117 500	②
3212 JH3 *S-Force*	237	139,5	**12**	6...13,8	69	7,8	■	31,0*	11 000	-20 ...+70	65 000 / 32 500	110 000	③
3212 JH4 *S-Force*	280	164,8	**12**	6...13,8	73	8,2	■	50,0*	13 000	-20 ...+70	60 000 / 30 000	110 000	④
3214 JN	130	76,5	**24**	11...28	51	6,1	■	6,5	6 000	-20 ...+70	70 000 / 35 000	117 500	①
3214 JH	146	86,0	**24**	12...30	55	6,4	■	9,0	6 800	-20 ...+70	70 000 / 35 000	117 500	②
3214 JH3 *S-Force*	237	139,5	**24**	12...27,6	69	7,8	■	30,0*	11 000	-20 ...+70	65 000 / 32 500	110 000	③
3214 JH4 *S-Force*	280	164,8	**24**	12...27,6	73	8,2	■	50,0*	13 000	-20 ...+70	60 000 / 30 000	110 000	④
3218 JN	130	76,5	**48**	36...56	51	6,1	■	7,0	6 000	-20 ...+70	70 000 / 35 000	117 500	①
3218 JH	146	86,0	**48**	36...53	55	6,4	■	9,5	6 800	-20 ...+70	70 000 / 35 000	117 500	②
3218 JH3 *S-Force*	237	139,5	**48**	20...58,0	69	7,8	■	29,0*	11 000	-20 ...+70	65 000 / 32 500	110 000	③
3218 JH4 *S-Force*	280	164,8	**48**	20...58,0	73	8,2	■	50,0*	13 000	-20 ...+70	60 000 / 30 000	110 000	④

Subject to alternations

3200 JH3 and JH4 also available as standard with PWM control input and speed signal.
Speed control range from 2000 rpm up to maximum nominal speed. Stationary at 0 % PWM, maximum speed at sensor break.
* Input power at free air flow, these values can be significantly higher in the operating point.

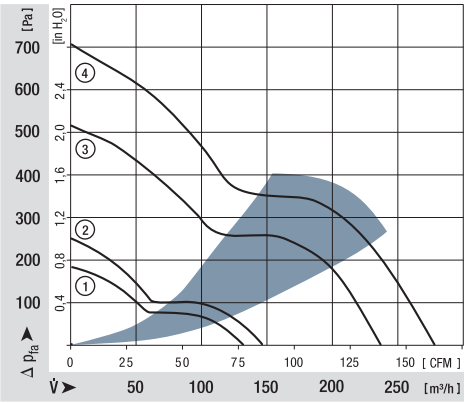

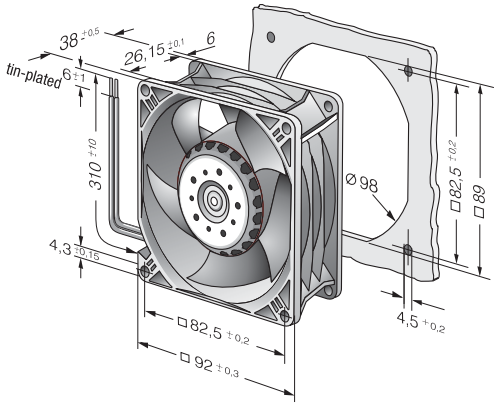

Guard grilles
from p. 238

ebmpapst

max. 270 m³/h

S-Panther

DC axial fans

Series 3250 J 92 x 92 x 38 mm

- **Material:** Housing: GRP[1)] (PBT)
  Impeller: GRP[1)] (PA)
- **Direction of air flow:** Exhaust over struts
- **Direction of rotation:** Clockwise, seen on rotor
- **Connection:** Via single wires AWG 22, TR 64
- **Mass:** 240 g

- **Possible special versions:**
  (See chapter DC fans - specials)
  - Speed signal
  - Go / No-go alarm
  - External temperature sensor
  - Internal temperature sensor
  - PWM control input
  - Analogue control input
  - Protection against moisture
  - Protection against salt fog
  - Type of protection: IP 54 / IP 68

1) Fibreglass-reinforced plastic

	Nominal data	Air flow	Air flow	Nominal voltage	Voltage range	Sound pressure level	Sound power level	Sintec sleeve bearings Ball bearings	Input power*	Nominal speed	Temperature range	Service life L_{10} (40 °C) ebm-papst Standard / Service life L_{10} (T_{max}) ebm-papst Standard	Life expectancy L_{10IPC} (40 °C) see page 17	Curve
	Type	m³/h	CFM	VDC	VDC	dB(A)	Bel(A)	□/■	Watts	rpm	°C	Hours	Hours	
NEW	3252 J/2 H3P	270	158	**12**	7...13,2	64	7,6	■	35,0	7 450	-20...+70	85 000 / 42 500	142 500	③
NEW	3254 J/2 H3P	270	158	**24**	14...26,4	64	7,6	■	35,0	7 450	-20...+70	85 000 / 42 500	142 500	③
NEW	3258 J/2 HP**	145	85	**48**	36...56,0	46	5,8	■	5,3	4 100	-20...+70	100 000 / 50 000	170 000	①
NEW	3258 J/2 HHP	235	138	**48**	36...56,0	59	7,0	■	24,3	6 650	-20...+70	90 000 / 45 000	152 500	②
NEW	3258 J/2 H3P	270	158	**48**	36...56,0	64	7,6	■	33,6	7 450	-20...+70	85 000 / 42 500	142 500	③

Subject to alternations

* Input power at free air flow, these values can be significantly higher in the operating point.
** On request

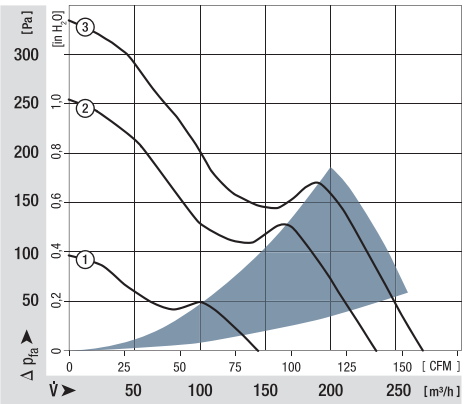

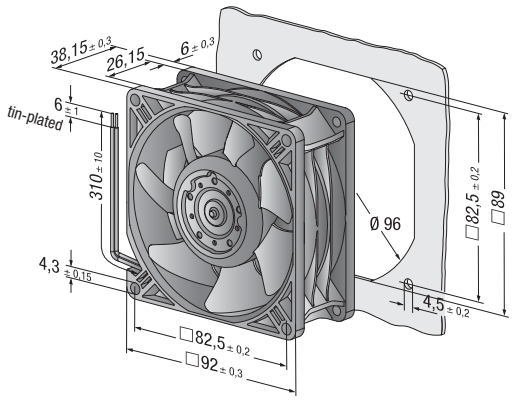

max. 170 m³/h

DC axial fans

Series 4400 F 119 x 119 x 25 mm

- **Material:** Housing: GRP[1)] (PBT)
  Impeller: GRP[1)] (PA)
- **Direction of air flow:** Exhaust over struts
- **Direction of rotation:** Counter-clockwise, seen on rotor
- **Connection:** Via single wires AWG 24, TR 64
- **Highlights:** Ball bearings and plain bearings available
- **Mass:** 175 g

- **Possible special versions:**
  (See chapter DC fans - specials)
  - Speed signal
  - Go / No-go alarm
  - Alarm with limit speed
  - External temperature sensor
  - Internal temperature sensor
  - PWM control input
  - Analogue control input
  - Protection against moisture

1) Fibreglass-reinforced plastic

Nominal data	Air flow	Air flow	Nominal voltage	Voltage range	Sound pressure level	Sound power level	Sintec sleeve bearings / Ball bearings	Input power	Nominal speed	Temperature range	Service life L_{10} (40 °C) ebm-papst Standard / Service life L_{10} (T_{max}) ebm-papst Standard	Life expectancy L_{10IPC} (40 °C) see page 17	Curve
Type	**m³/h**	**CFM**	**VDC**	**VDC**	**dB(A)**	**Bel(A)**	□/■	**Watts**	**rpm**	**°C**	**Hours**	**Hours**	
4412 FGL	94	55	**12**	7...14	26	3,9	□	1,3	1 600	-20...+75	80 000 / 35 000	135 000	①
4412 FGML	114	67	**12**	7...12,6	32	4,3	□	2,0	1 950	-20...+75	75 000 / 32 500	127 500	②
4412 FML	114	67	**12**	7...12,6	32	4,3	■	2,0	1 950	-20...+75	75 000 / 32 500	127 500	②
4412 FGM	140	82	**12**	7...12,6	38	4,8	□	3,2	2 400	-20...+75	70 000 / 30 000	117 500	③
4412 FM	140	82	**12**	7...12,6	38	4,8	■	3,2	2 400	-20...+75	70 000 / 30 000	117 500	③
4412 FG	170	100	**12**	8...12,6	43	5,3	□	5,3	2 900	-20...+60	60 000 / 37 500	102 500	④
4412 F	170	100	**12**	8...12,6	43	5,3	■	5,3	2 900	-20...+60	60 000 / 37 500	102 500	④
4414 FL	94	55	**24**	18...28	26	3,9	■	1,2	1 600	-20...+75	80 000 / 35 000	135 000	①
4414 FM	140	82	**24**	12...28	38	4,8	■	3,1	2 400	-20...+75	70 000 / 30 000	117 500	③
4414 FG	170	100	**24**	12...28	43	5,3	□	5,0	2 900	-20...+60	60 000 / 37 500	102 500	④
4414 F	170	100	**24**	12...28	43	5,3	■	5,0	2 900	-20...+60	60 000 / 37 500	102 500	④
4418 FG	170	100	**48**	28...53	43	5,3	□	5,4	2 900	-20...+60	60 000 / 37 500	102 500	④
4418 F	170	100	**48**	28...53	43	5,3	■	5,4	2 900	-20...+60	60 000 / 37 500	102 500	④

Subject to alternations

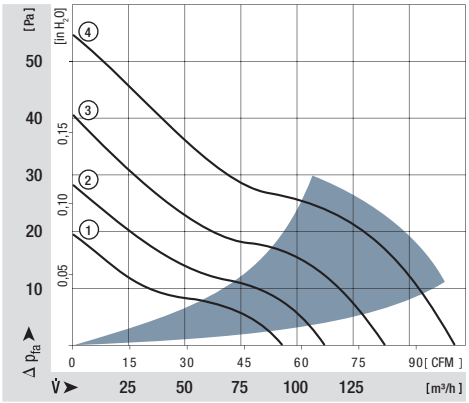

Available on request:
Fan housing with moulded-in spacers. For mounting over both flanges.

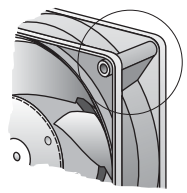

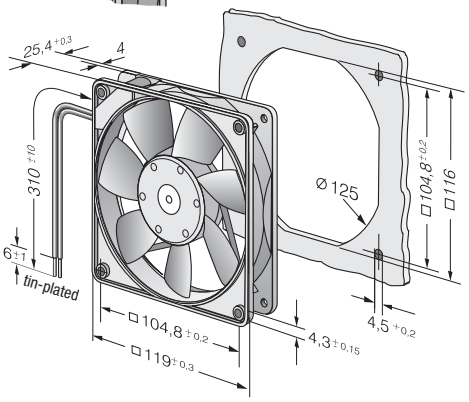

Guard grilles from p. 238

max. 225 m³/h

DC axial fans

Series 4400 FN 119 x 119 x 25 mm

- **Material:** Housing: GRP[1)] (PBT)
  Impeller: GRP[1)] (PA)
- **Direction of air flow:** Exhaust over struts
- **Direction of rotation:** Counter-clockwise, seen on rotor
- **Connection:** Via single wires AWG 22, TR 64
- **Mass:** 240 g

- **Possible special versions:**
  (See chapter DC fans - specials)
  - Speed signal
  - Go / No-go alarm
  - Alarm with limit speed
  - External temperature sensor
  - Internal temperature sensor
  - PWM control input
  - Analogue control input
  - Protection against moisture

1) Fibreglass-reinforced plastic

Nominal data	Air flow	Air flow	Nominal voltage	Voltage range	Sound pressure level	Sound power level	Sintec sleeve bearings Ball bearings	Input power	Nominal speed	Temperature range	Service life L_{10} (40 °C) ebm-papst Standard / Service life L_{10} (T_{max}) ebm-papst Standard	Life expectancy L_{10}IPC (40 °C) see page 17	Curve
Type	m³/h	CFM	VDC	VDC	dB(A)	Bel(A)	□/■	Watts	rpm	°C	Hours	Hours	
4412 FNH	225	132	**12**	9...13,2	55	6,7	■	12	5 400	-20...+70	60 000 / 30 000	102 500	②
4414 FNN	200	118	**24**	14...28	52	6,5	■	8,3	4 850	-20...+70	60 000 / 30 000	102 500	①
4414 FNH	225	132	**24**	18...26,4	55	6,7	■	12	5 400	-20...+70	60 000 / 30 000	102 500	②
4418 FNH	225	132	**48**	36...53	55	6,7	■	12	5 400	-20...+70	60 000 / 30 000	102 500	②

Subject to alternations

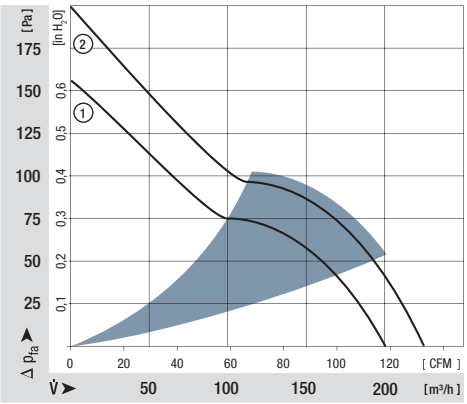

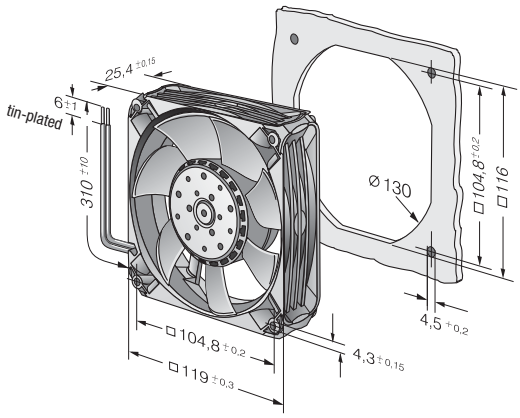

max. 204 m³/h

DC axial fans

Series 4300 119 x 119 x 32 mm

- **Material:** Housing: GRP[1)] (PBT)
  Impeller: GRP[1)] (PA)
- **Direction of air flow:** Exhaust over struts
- **Direction of rotation:** Clockwise, seen on rotor
- **Connection:** Via single wires AWG 22, TR 64
- **Highlights:** Ball bearings and plain bearings available
- **Mass:** 220 g

- **Possible special versions:**
  (See chapter DC fans - specials)
  - Speed signal
  - Go / No-go alarm
  - Alarm with limit speed
  - External temperature sensor
  - Internal temperature sensor
  - PWM control input
  - Analogue control input
  - Protection against moisture
  - Protection against salt fog
  - Type of protection: IP 54 / IP 68

1) Fibreglass-reinforced plastic

Nominal data	Air flow	Air flow	Nominal voltage	Voltage range	Sound pressure level	Sound power level	Sintec sleeve bearings / Ball bearings	Input power	Nominal speed	Temperature range	Service life L_{10} (40 °C) ebm-papst Standard / Service life L_{10} (T_{max}) ebm-papst Standard	Life expectancy L_{10IPC} (40 °C) see page 17	Curve
Type	**m³/h**	**CFM**	**VDC**	**VDC**	**dB(A)**	**Bel(A)**	□/■	**Watts**	**rpm**	**°C**	**Hours**	**Hours**	
4312 GL	95	56	**12**	6...15	30	4,3	□	1,2	1 550	-20...+75	80 000 / 35 000	135 000	①
4312 L	95	56	**12**	6...15	30	4,3	■	1,2	1 550	-20...+75	80 000 / 35 000	135 000	①
4312 GM	140	82	**12**	6...15	39	5,3	□	3,1	2 300	-20...+75	70 000 / 30 000	117 500	②
4312 M	140	82	**12**	6...15	39	5,3	■	3,1	2 300	-20...+75	70 000 / 30 000	117 500	②
4312 G	170	100	**12**	6...15	45	5,8	□	5,0	2 800	-20...+70	62 500 / 30 000	105 000	③
4312	170	100	**12**	6...15	45	5,8	■	5,0	2 800	-20...+70	62 500 / 30 000	105 000	③
4312-179	204	120	**12**	6...13,2	51	6,4	■	9,4	3 400	-20...+65	47 500 / 27 500	80 000	⑤
4314 L	95	56	**24**	12...28	30	4,3	■	1,2	1 550	-20...+75	80 000 / 35 000	135 000	①
4314 M	140	82	**24**	12...28	39	5,3	■	2,8	2 300	-20...+75	70 000 / 30 000	117 500	②
4314 G	170	100	**24**	12...28	45	5,8	□	4,7	2 800	-20...+75	62 500 / 27 500	105 000	③
4314	170	100	**24**	12...28	45	5,8	■	5,0	2 800	-20...+75	62 500 / 27 500	105 000	③
4314-147	180	106	**24**	12...28	47	6,1	■	4,7	3 000	-20...+75	57 500 / 25 000	80 000	④
4314-180	204	120	**24**	12...26	51	6,4	■	8,5	3 400	-20...+70	45 000 / 22 500	75 000	⑤
4318 M	140	82	**48**	36...56	39	5,3	■	3,6	2 300	-20...+75	70 000 / 30 000	117 500	②
4318	170	100	**48**	36...53	45	5,8	■	5,1	2 800	-20...+75	62 500 / 27 500	105 000	③

Subject to alternations

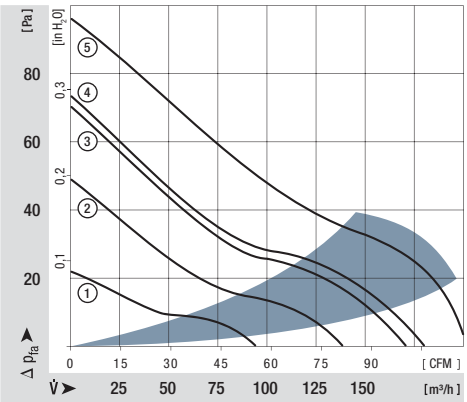

Rotor protrusion max. 0.4 mm.

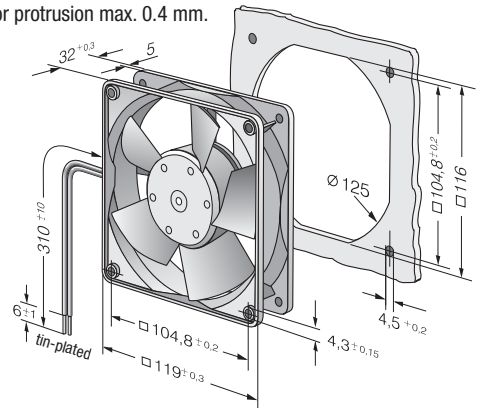

Guard grilles
from p. 238

ebmpapst

max. 170 m³/h

DC axial fans

Series 4300 VARIOFAN 119 x 119 x 32 mm

- **Material:** Housing: GRP[1)] (PBT)
  Impeller: GRP[1)] (PA)
- **Direction of air flow:** Exhaust over struts
- **Direction of rotation:** Clockwise, seen on rotor
- **Connection:** Via single wires AWG 22, TR 64
- **Highlights:** Speed automatically adjusted to cooling requirement
- **Mass:** 220 g

- **Possible special versions:**
  (See chapter DC fans - specials)
  - Speed signal
  - Go / No-go alarm
  - Alarm with limit speed
  - External temperature sensor
  - Internal temperature sensor
  - PWM control input
  - Analogue control input
  - Protection against moisture

1) Fibreglass-reinforced plastic

Nominal data		Air flow	Air flow	Nominal voltage	Voltage range	Sound pressure level	Sound power level	Sintec sleeve bearings / Ball bearings	Input power	Nominal speed	Temperature range	Service life L_{10} (40 °C) ebm-papst Standard / Service life L_{10} (T_{max}) ebm-papst Standard	Life expectancy L_{10IPC} (40 °C) see page 17	Curve
Type		m³/h	CFM	VDC	VDC	dB(A)	Bel(A)	□/■	Watts	rpm	°C	Hours	Hours	
25°C / 50°C	4312 MT	65	38	12	8...15	25	3,9	■	1,1	1 100	-20...+65	70 000 / 40 000	117 500	①
		138	81			39	5,3		3,3	2 300				②
25°C / 50°C	4312 T	85	50	12	8...13,2	29	4,2	■	1,7	1 400	-20...+65	65 000 / 35 000	110 000	③
		170	100			45	5,8		5,0	2 800				④
30°C / 50°C	4314 T	85	50	24	18...32	29	4,2	■	1,6	1 400	-20...+65	65 000 / 35 000	110 000	③
		170	100			45	5,8		4,8	2 800				④

Subject to alternations

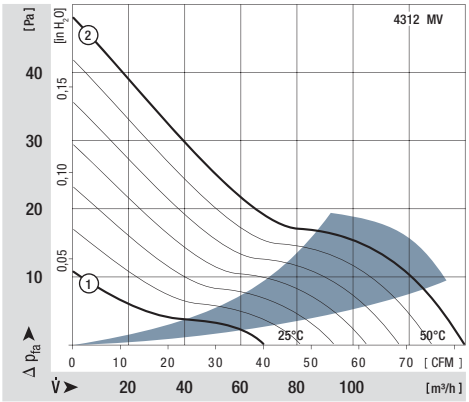

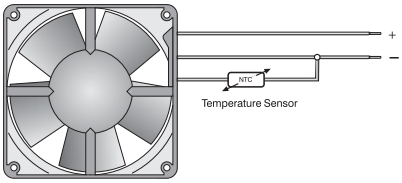

The temperature sensor for controlling the motor speed is not included in delivery.
Temperature sensor LZ 370 see accessories.

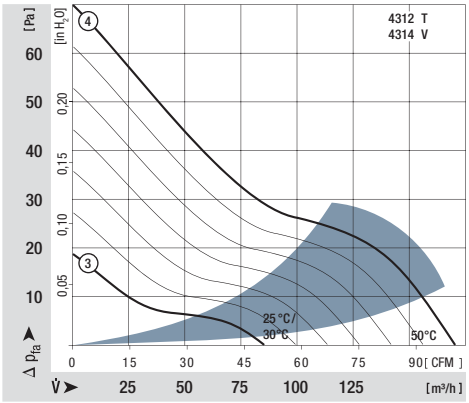

Rotor protrusion max. 0.4 mm.

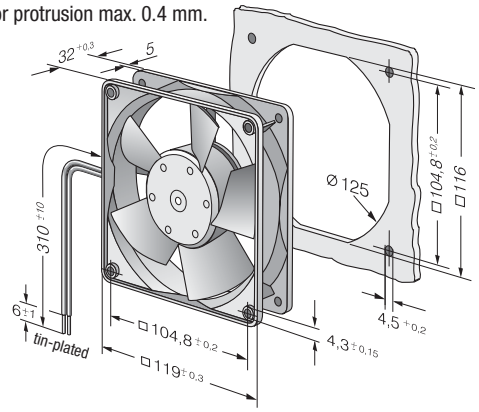

max. 205 m³/h

DC axial fans

Series 4400 119 x 119 x 38 mm

- **Material:** Housing: GRP[1)] (PBT)
  Impeller: GRP[1)] (PA)
- **Direction of air flow:** Exhaust over struts
- **Direction of rotation:** Clockwise, seen on rotor
- **Connection:** Via single wires AWG 24, TR 64
- **Mass:** 270 g

- **Possible special versions:**
  (See chapter DC fans - specials)
  - Speed signal
  - Go / No-go alarm
  - Alarm with limit speed
  - External temperature sensor
  - Internal temperature sensor
  - PWM control input
  - Analogue control input
  - Protection against moisture
  - Type of protection: IP 54

1) Fibreglass-reinforced plastic

Nominal data	Air flow	Air flow	Nominal voltage	Voltage range	Sound pressure level	Sound power level	Sintec sleeve bearings / Ball bearings	Input power	Nominal speed	Temperature range	Service life L_{10} (40 °C) ebm-papst Standard / Service life L_{10} (T_{max}) ebm-papst Standard	Life expectancy L_{10IPC} (40 °C) see page 17	Curve
Type	**m³/h**	**CFM**	**VDC**	**VDC**	**dB(A)**	**Bel(A)**	□/■	**Watts**	**rpm**	**°C**	**Hours**	**Hours**	
4412 L	150	88	**12**	7...14	37	5,0	■	2,2	2 700	-20...+80	67 500 / 22 500	115 000	③
4412 ML	168	99	**12**	7...15	40	5,1	■	3,0	3 000	-20...+80	67 500 / 22 500	115 000	④
4412 M	184	108	**12**	7...14	42	5,3	■	3,8	3 300	-20...+75	65 000 / 25 000	110 000	⑤
4412 N	205	121	**12**	7...14	46	5,6	■	5,3	3 650	-20...+70	62 500 / 30 000	105 000	⑥
4414 L3	100	59	**24**	12...28	26	4,0	■	1,0	1 800	-20...+80	75 500 / 22 500	127 500	①
4414 LL	124	73	**24**	12...28	33	4,5	■	1,6	2 250	-20...+80	70 000 / 22 500	117 500	②
4414 L	150	88	**24**	18...28	37	5,0	■	2,4	2 700	-20...+80	67 500 / 22 500	115 000	③
4414 ML	168	99	**24**	12...28	40	5,1	■	3,2	3 000	-20...+80	67 500 / 22 500	115 000	④
4414 M	184	108	**24**	18...28	42	5,3	■	4,1	3 300	-20...+75	65 000 / 25 000	110 000	⑤
4414 N	205	121	**24**	18...28	46	5,6	■	5,4	3 650	-20...+70	62 500 / 30 000	105 000	⑥
4418 L	150	88	**48**	36...60	37	5,0	■	2,5	2 700	-20...+75	67 500 / 27 500	115 000	③
4418 ML	168	99	**48**	36...60	40	5,1	■	3,2	3 000	-20...+75	67 500 / 27 500	115 000	④
4418 M	184	108	**48**	36...60	42	5,3	■	4,2	3 300	-20...+70	65 000 / 32 500	110 000	⑤
4418 N	205	121	**48**	36...60	46	5,6	■	5,4	3 650	-20...+70	62 500 / 30 000	105 000	⑥

Subject to alternations

Further variants can be found on page 59.

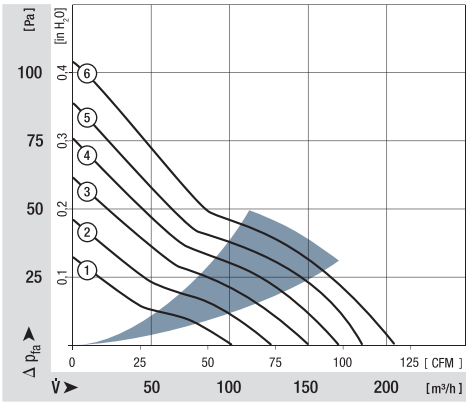

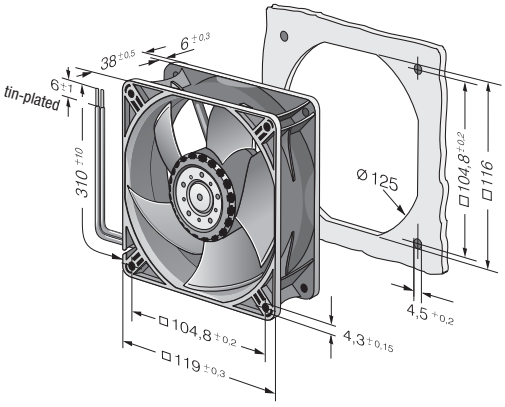

Guard grilles from p. 238

ebmpapst

max. 285 m³/h

DC axial fans

Series 4400 119 x 119 x 38 mm

- **Material:** Housing: GRP[1)] (PBT)
  Impeller: GRP[1)] (PA)
- **Direction of air flow:** Exhaust over struts
- **Direction of rotation:** Clockwise, seen on rotor
- **Connection:** Via single wires AWG 24, TR 64
- **Mass:** 270 g

- **Possible special versions:**
  (See chapter DC fans - specials)
  - Speed signal
  - Go / No-go alarm
  - Alarm with limit speed
  - External temperature sensor
  - Internal temperature sensor
  - PWM control input
  - Analogue control input
  - Protection against moisture
  - Type of protection: IP 54

1) Fibreglass-reinforced plastic

Nominal data	Air flow	Air flow	Nominal voltage	Voltage range	Sound pressure level	Sound power level	Sintec sleeve bearings / Ball bearings	Input power	Nominal speed	Temperature range	Service life L_{10} (40 °C) ebm-papst Standard / Service life L_{10} (T_{max}) ebm-papst Standard	Life expectancy L_{10}IPC (40 °C) see page 17	Curve
Type	m³/h	CFM	VDC	VDC	dB(A)	Bel(A)	□/■	Watts	rpm	°C	Hours	Hours	
4412 H	240	141	**12**	7...14	50	6,0	■	8,6	4 300	-20...+70	57 500 / 27 500	92 500	①
4412/2 HHP	285	168	**12**	7...14,5	55	6,4	■	13,0	5 000	-20...+70	50 000 / 25 000	85 000	②
4414 H	240	141	**24**	18...28	50	6,0	■	8,6	4 300	-20...+70	57 500 / 27 500	92 500	①
4414 HH	285	165	**24**	16...28	55	6,4	■	14,0	5 000	-20...+70	50 000 / 25 000	85 000	②
4414/2 HHP	285	168	**24**	18...28	55	6,4	■	12,0	5 000	-20...+70	50 000 / 25 000	85 000	②
4418 H	240	141	**48**	36...60	50	6,0	■	8,6	4 300	-20...+70	57 500 / 27 500	92 500	①
4418/2 HHP	285	168	**48**	36...60	55	6,4	■	13,0	5 000	-20...+70	50 000 / 25 000	85 000	②

Subject to alternations

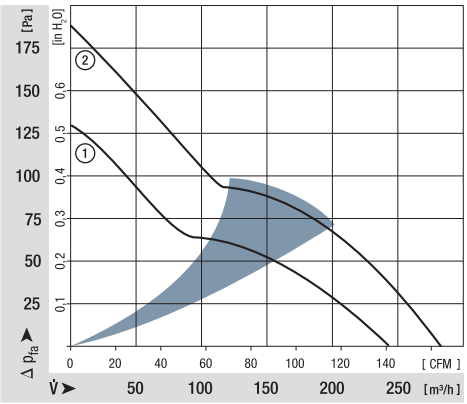

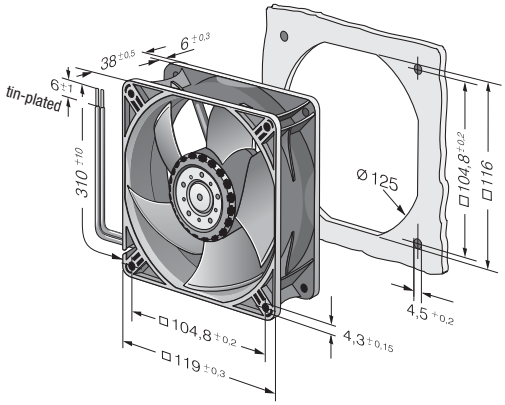

max. 237 m³/h

DC axial fans

Series 4100 N 119 x 119 x 38 mm

- **Material:** Housing: Die-cast aluminium
  Impeller: GRP[1)] (PA)
- **Direction of air flow:** Intake over struts
- **Direction of rotation:** Clockwise, seen on rotor
- **Connection:** On flat connectors, 2.8 x 0.5 mm
  Also available with wires as an option
- **Highlights:** Housing with grounding lug for screw M4 x 8 (Torx)
- **Mass:** 390 g

- **Possible special versions:**
  (See chapter DC fans - specials)
  - Speed signal
  - Go / No-go alarm
  - Alarm with limit speed
  - External temperature sensor
  - Internal temperature sensor
  - PWM control input
  - Analogue control input
  - Protection against moisture
  - Protection against salt fog
  - Type of protection: IP 54 / IP 68

1) Fibreglass-reinforced plastic

Nominal data	Air flow	Air flow	Nominal voltage	Voltage range	Sound pressure level	Sound power level	Sintec sleeve bearings / Ball bearings	Input power	Nominal speed	Temperature range	Service life L_{10} (40 °C) ebm-papst Standard / Service life L_{10} (T_{max}) ebm-papst Standard	Life expectancy L_{10IPC} (40 °C) see page 17	Curve
Type	m³/h	CFM	VDC	VDC	dB(A)	Bel(A)	□/■	Watts	rpm	°C	Hours	Hours	
4182 NGX	160	94	**12**	6...15	44	5,3	□	3,7	2 800	-20...+75	85 000 / 37 500	142 500	①
4182 NX	180	106	**12**	6...15	49	5,7	■	4,9	3 200	-30...+75	85 000 / 37 500	142 500	②
4182 NXH	237	140	**12**	7...14	57	6,5	■	11,0	4 400	-30...+55	70 000 / 50 000	117 500	③
4184 NGX	160	94	**24**	12...31,5	44	5,3	□	3,3	2 800	-20...+75	85 000 / 37 500	142 500	①
4184 NXM	160	94	**24**	12...31,5	44	5,3	■	3,2	2 800	-30...+75	85 000 / 37 500	142 500	①
4184 NX	180	106	**24**	12...31,5	49	5,7	■	4,9	3 200	-30...+70	85 000 / 42 500	142 500	②
4184 NXH	237	140	**24**	12...28	57	6,5	■	11,0	4 400	-30...+70	70 000 / 35 000	117 500	③
4188 NGX	160	94	**48**	36...60	44	5,3	□	3,6	2 800	-20...+75	85 000 / 37 500	142 500	①
4188 NXM	160	94	**48**	36...60	44	5,3	■	3,5	2 800	-30...+75	85 000 / 37 500	142 500	①

Subject to alternations

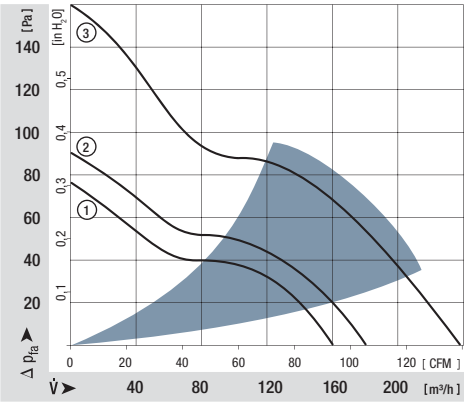

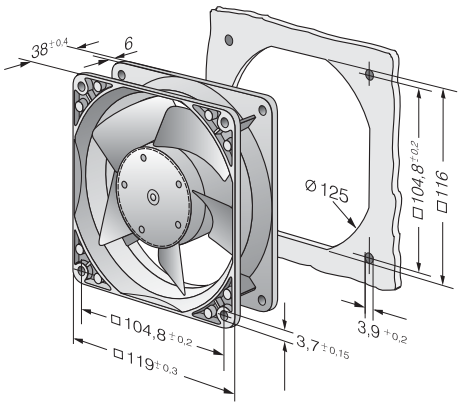

ebmpapst

max. 440 m³/h

DC axial fans

Series 4100 N High Performance 119 x 119 x 38 mm

- **Material:** Housing: Die-cast aluminium
  Impeller: GRP[1)] (PA)
- **Direction of air flow:** Intake over struts
- **Direction of rotation:** Clockwise, seen on rotor
- **Connection:** Via single wires AWG 22 UL 1007, TR 64
- **Highlights:** Housing with grounding lug for screw M4 x 8 (Torx)
- **Mass:** 390 g

- **Possible special versions:**
  (See chapter DC fans - specials)
  - Speed signal
  - Go / No-go alarm
  - Alarm with limit speed
  - External temperature sensor
  - Internal temperature sensor
  - PWM control input
  - Analogue control input
  - Protection against moisture
  - Protection against salt fog
  - Type of protection: IP 54 / IP 68

1) Fibreglass-reinforced plastic

Nominal data	Air flow	Air flow	Nominal voltage	Voltage range	Sound pressure level	Sound power level	Sintec sleeve bearings / Ball bearings	Input power*	Nominal speed	Temperature range	Service life L_{10} (40 °C) ebm-papst Standard / Service life L_{10} (T_{max}) ebm-papst Standard	Life expectancy L_{10IPC} (40 °C) see page 17	Curve
Type	m³/h	CFM	VDC	VDC	dB(A)	Bel(A)	□/■	Watts	rpm	°C	Hours	Hours	
4112 NHH	260	153	**12**	9...15	60	6,8	■	13,3	5 000	-20...+65	70 000 / 55 000	117 500	①
4112 NH3	310	182	**12**	9...15	65	7,2	■	21,6	6 000	-20...+65	65 000 / 37 500	110 000	②
4112 NH4	355	209	**12**	9...14	67	7,4	■	32,0	6 800	-20...+65	62 500 / 35 000	105 000	③
4114 NHH	260	153	**24**	16...30	60	6,8	■	12,4	5 000	-20...+65	70 000 / 52 500	117 500	①
4114 NH3	310	182	**24**	16...30	65	7,2	■	19,5	6 000	-20...+65	65 000 / 37 500	110 000	②
4114 NH4	355	209	**24**	16...30	67	7,4	■	30,0	6 800	-20...+65	62 500 / 35 000	105 000	③
4114 NH5 *S-Force*	390	230	**24**	16...30	70	7,6	■	45,0*	7 500	-20...+65	62 500 / 35 000	105 000	④
4114 NH6 *S-Force*	440	259	**24**	16...30	73	8,1	■	65,0*	8 400	-20...+65	60 000 / 32 500	102 500	⑤
4118 NHH	260	153	**48**	36...60	60	6,8	■	12,0	5 000	-20...+65	70 000 / 52 500	117 500	①
4118 NH3	310	182	**48**	36...60	65	7,2	■	20,0	6 000	-20...+65	65 000 / 37 500	110 000	②
4118 NH4	355	209	**48**	36...60	67	7,4	■	28,0	6 800	-20...+65	62 500 / 35 000	105 000	③
4118 NH5 *S-Force*	390	230	**48**	36...60	70	7,6	■	45,0*	7 500	-20...+65	62 500 / 35 000	105 000	④
4118 NH6 *S-Force*	440	259	**48**	36...60	73	8,1	■	62,0*	8 400	-20...+65	60 000 / 32 500	102 500	⑤

Subject to alternations

* Input power at free air flow, these values can be significantly higher in the operating point.

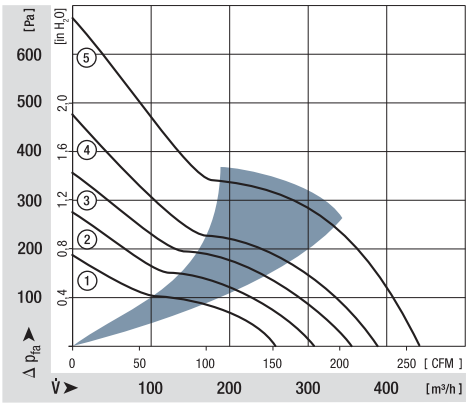

*** Input power - in operation**

Fan type	optimum operating range (W)
4114 NH5	55
4114 NH6	95
4118 NH5	55
4118 NH6	95

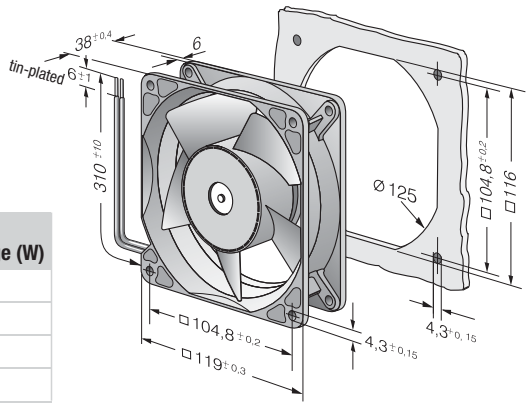

max. 570 m³/h

S-Force

DC axial fans

Series 4100 N High Performance 119 x 119 x 38 mm

- **Material:** Housing: Die-cast aluminium
  Impeller: GRP[1)] (PA)
- **Direction of air flow:** Intake over struts
- **Direction of rotation:** Clockwise, seen on rotor
- **Connection:** Via single wires AWG 18, 20 or AWG 22, TR 64, speed signal and control input AWG 22
- **Highlights:** 3-phase fan drive with very smooth running and high efficiency
  Housing with grounding lug for screw M4 x 8 (Torx)
- **Mass:** 425 g

1) Fibreglass-reinforced plastic

- **Possible special versions:**
  (See chapter DC fans - specials)
  - Speed signal
  - Go / No-go alarm
  - Alarm with limit speed
  - External temperature sensor
  - Internal temperature sensor
  - PWM control input
  - Analogue control input
  - Protection against moisture
  - Protection against salt fog

Nominal data	Air flow	Air flow	Nominal voltage	Voltage range	Sound pressure level	Sound power level	Sintec sleeve bearings / Ball bearings	Input power**	Nominal speed	Temperature range	Service life L_{10} (40 °C) ebm-papst Standard / Service life L_{10} (T_{max}) ebm-papst Standard	Life expectancy L_{10IPC} (40 °C) see page 17	Curve
Type	**m³/h**	**CFM**	**VDC**	**VDC**	**dB(A)**	**Bel(A)**	□/■	**Watts**	**rpm**	**°C**	**Hours**	**Hours**	
4114 N/2 H7P	500	294	**24**	16...30	76	8,5	■	90	9 500	-20...+75	57 500 / 25 000	97 500	①
4114 N/2 H8P	570	336	**24**	16...30	78	8,9	■	120	11 000	-20...+75	55 000 / 22 500	92 500	②
4118 N/2 H7P	500	294	**48**	36...60*	76	8,5	■	90	9 500	-20...+75	57 500 / 25 000	97 500	①
4118 N/2 H8P	570	336	**48**	36...60*	78	8,9	■	120	11 000	-20...+75	55 000 / 22 500	92 500	②

Subject to alternations

* 36...72 VDC on request.

Speed control range from 500 rpm up to maximum nominal speed. Stationary at 0 % PWM, maximum speed at sensor break.
To attain the specified service life, an external capacitor must be wired between the plus and minus strands.
Please note the wiring suggestion on page 16.
** Input power at free air flow, these values can be significantly higher in the operating point.

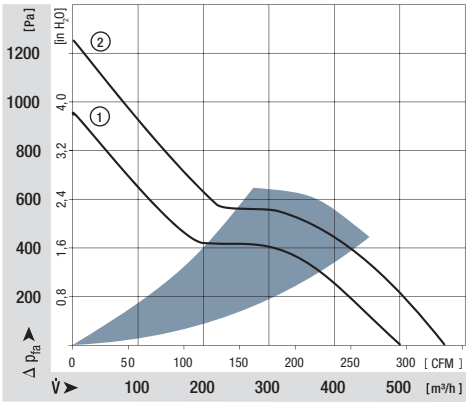

**** Input power - in operation**

Fan type	optimum operating range (W)
4114 NH7P	100
4114 NH8P	160
4118 NH7P	100
4118 NH8P	160

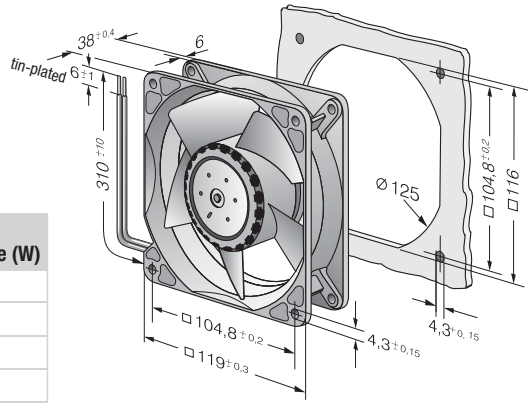

Guard grilles from p. 238

ebmpapst

max. 280 m³/h

DC diagonal fans

Series DV 4100 119 x 119 x 38 mm

- **Material:** Housing: GRP[1)] (PBT)
  Available in Die-cast aluminium
  Impeller: GRP[1)] (PA)
- **Direction of air flow:** Exhaust over struts
- **Direction of rotation:** Counter-clockwise, seen on rotor
- **Connection:** Via single wires AWG 22, TR 64
- **Highlights:** Housing with grounding lug for screw M4 x 8 (Torx)
- **Mass:** 375 g
  (with metal housing: 455 g)

1) Fibreglass-reinforced plastic

- **Possible special versions:**
  (See chapter DC fans - specials)
  - Speed signal
  - Go / No-go alarm
  - Alarm with limit speed
  - External temperature sensor
  - Internal temperature sensor
  - PWM control input
  - Analogue control input
  - Protection against moisture
  - Protection against salt fog
  - Type of protection: IP 54 / IP 68

Nominal data	Air flow	Air flow	Nominal voltage	Voltage range	Sound pressure level	Sound power level	Sintec sleeve bearings Ball bearings	Input power*	Nominal speed	Temperature range	Service life L_{10} (40 °C) ebm-papst Standard / Service life L_{10} (T_{max}) ebm-papst Standard	Life expectancy L_{10IPC} (40 °C) see page 17	Curve
Type	m³/h	CFM	VDC	VDC	dB(A)	Bel(A)	□/■	Watts	rpm	°C	Hours	Hours	
DV 4112 N	280	165	**12**	9...15	61	6,9	■	21,0	6 000	-20...+65	70 000 / 40 000	117 500	①
DV 4114 N	280	165	**24**	16...30	61	6,9	■	20,5	6 000	-20...+65	70 000 / 40 000	117 500	①
DV 4118 N	280	165	**48**	36...60	61	6,9	■	20,0	6 000	-20...+65	70 000 / 40 000	117 500	①

Subject to alternations

* Input power at free air flow, these values can be significantly higher in the operating point.

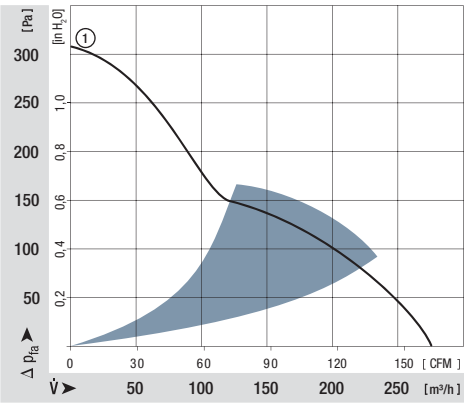

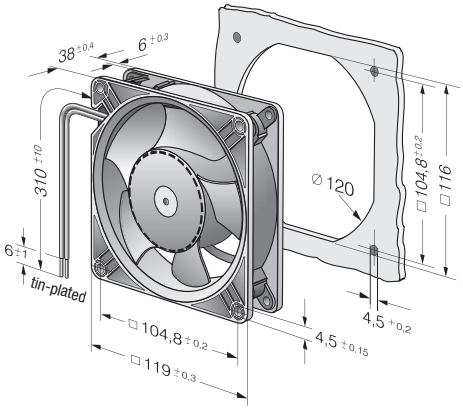

max. 340 m³/h

DC axial fans

Series 5200 N 127 x 127 x 38 mm

- **Material:** Housing: GRP[1)] (PBT)
  Impeller: GRP[1)] (PA)
- **Direction of air flow:** Exhaust over struts
- **Direction of rotation:** Counter-clockwise, seen on rotor
- **Connection:** Via single wires AWG 22, TR 64
- **Mass:** 310 g

1) Fibreglass-reinforced plastic

- **Possible special versions:**
  (See chapter DC fans - specials)
  - Speed signal
  - Go / No-go alarm
  - Alarm with limit speed
  - External temperature sensor
  - Internal temperature sensor
  - PWM control input
  - Analogue control input
  - Protection against moisture
  - Protection against salt fog
  - Type of protection: IP 54 / IP 68

Nominal data	Air flow	Air flow	Nominal voltage	Voltage range	Sound pressure level	Sound power level	Sintec sleeve bearings / Ball bearings	Input power**	Nominal speed	Temperature range	Service life L_{10} (40 °C) ebm-papst Standard / Service life L_{10} (T_{max}) ebm-papst Standard	Life expectancy L_{10IPC} (40 °C) see page 17	Curve
Type	**m³/h**	**CFM**	**VDC**	**VDC**	**dB(A)**	**Bel(A)**	□/■	**Watts**	**rpm**	**°C**	**Hours**	**Hours**	
5212 NM	187	110	**12**	7...14,5	43	5,3	■	4,1	2 750	-20...+75	62 500 / 27 500	105 000	①
5212 NN	216	127	**12**	7...14	46	5,6	■	6,2	3 150	-20...+70	57 500 / 25 000	97 500	②
5212 NH	252	148	**12**	7...14	51	6,0	■	9,8	3 650	-20...+70	45 000 / 22 500	75 000	③
5212 NHH*	340	200	**12**	9...15	58	6,6	■	19,0	4 900	-20...+65	45 000 / 25 000	75 000	④
5214 NM	187	110	**24**	12...28	43	5,3	■	4,6	2 750	-20...+75	62 500 / 27 500	105 000	①
5214 NN	216	127	**24**	12...28	46	5,6	■	6,0	3 150	-20...+75	57 500 / 25 000	97 500	②
5214 NH	252	148	**24**	12...28	51	6,0	■	9,8	3 650	-20...+70	45 000 / 22 500	75 000	③
5214 NHH*	340	200	**24**	16...30	58	6,6	■	17,5	4 900	-20...+65	45 000 / 25 000	75 000	④
5218 NM	187	110	**48**	36...56	43	5,3	■	4,5	2 750	-20...+75	62 500 / 27 500	105 000	①
5218 NN	216	127	**48**	36...56	46	5,6	■	6,2	3 150	-20...+70	57 500 / 32 500	97 500	②
5218 NH	252	148	**48**	36...56	51	6,0	■	9,6	3 650	-20...+55	45 000 / 32 500	75 000	③
5218 NHH*	340	200	**48**	36...60	58	6,6	■	18,0	4 900	-20...+65	45 000 / 25 000	75 000	④

Subject to alternations

** Input power at free air flow, these values can be significantly higher in the operating point.

***Models NHH:** Fan housing with moulded-in spacers.

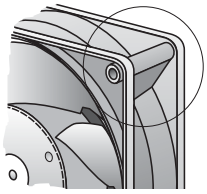

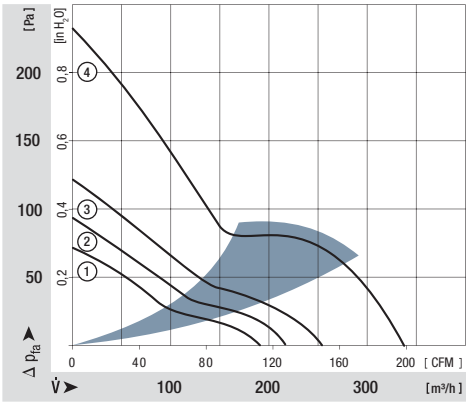

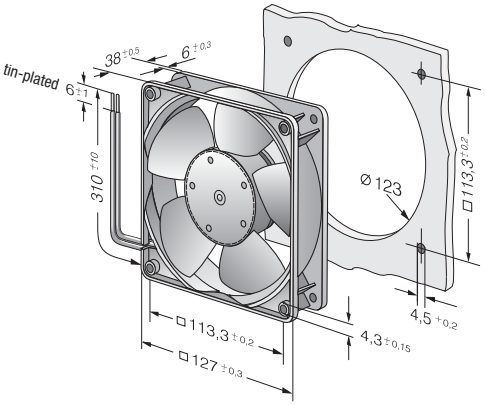

Guard grilles from p. 238

ebmpapst

max. 320 m³/h

DC diagonal fans

Series DV 5200 127 x 127 x 38 mm

- **Material:** Housing: GRP[1)] (PBT)
  Available in Die-cast aluminium
  Metal flange
  Impeller: GRP[1)] (PA)
- **Direction of air flow:** Exhaust over struts
- **Direction of rotation:** Counter-clockwise, seen on rotor
- **Connection:** Via single wires AWG 22, TR 64
- **Highlights:** Housing with grounding lug for screw M4 x 8 (Torx)
- **Mass:** 415 g (with metal housing: 490 g)

1) Fibreglass-reinforced plastic

- **Possible special versions:**
  (See chapter DC fans - specials)
  - Speed signal
  - Go / No-go alarm
  - Alarm with limit speed
  - External temperature sensor
  - Internal temperature sensor
  - PWM control input
  - Analogue control input
  - Protection against moisture
  - Protection against salt fog
  - Type of protection: IP 54 / IP 68

Nominal data	Air flow	Air flow	Nominal voltage	Voltage range	Sound pressure level	Sound power level	Sintec sleeve bearings Ball bearings	Input power*	Nominal speed	Temperature range	Service life L_{10} (40 °C) ebm-papst Standard / Service life L_{10} (T_{max}) ebm-papst Standard	Life expectancy L_{10IPC} (40 °C) see page 17	Curve
Type	**m³/h**	**CFM**	**VDC**	**VDC**	**dB(A)**	**Bel(A)**	**□/■**	**Watts**	**rpm**	**°C**	**Hours**	**Hours**	
DV 5212 N	270	159	**12**	9...15	56	6,4	■	21,0	5 000	-20...+65	70 000 / 40 000	117 500	①
DV 5214 N	270	159	**24**	16...30	56	6,4	■	20,4	5 000	-20...+65	70 000 / 40 000	117 500	①
DV 5218 N	270	159	**48**	36...60	56	6,4	■	18,5	5 000	-20...+65	70 000 / 40 000	117500	①
Model comes standard with speed signal and PWM control input. Other versions by request.													
DV 5214/2 HP	320	188	**24**	16...30	62	7,2	■	38,5	6 000	-20...+65	62 500 / 35 000	105 000	②

Subject to alternations

Speed control range from 1000 rpm up to maximum nominal speed. Stationary at 0 % PWM, maximum speed at sensor break.
* Input power at free air flow, these values can be significantly higher in the operating point.

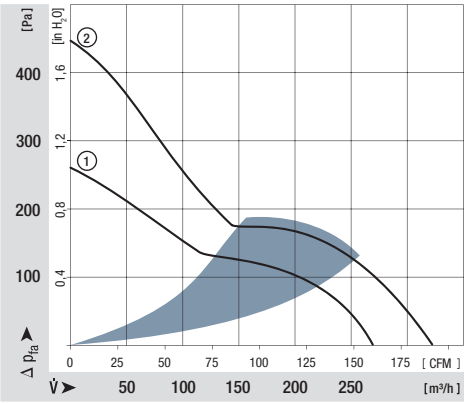

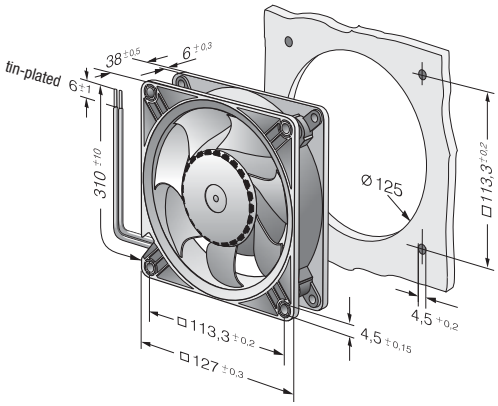

max. 260 m³/h

DC axial fans

Series 5100 N 135 x 135 x 38 mm

- **Material:** Housing: Die-cast aluminium
  Impeller: Painted sheet steel
- **Direction of air flow:** Exhaust over struts
- **Direction of rotation:** Counter-clockwise, seen on rotor
- **Connection:** Via single wires AWG 22, TR 64
- **Highlights:** Housing with grounding lug for screw M4 x 8 (Torx)
  48 V version incl. screws
- **Mass:** 650 g

- **Possible special versions:**
  (See chapter DC fans - specials)
  - Speed signal
  - Go / No-go alarm
  - Alarm with limit speed
  - External temperature sensor
  - Internal temperature sensor
  - PWM control input
  - Analogue control input
  - Protection against moisture
  - Protection against salt fog
  - Type of protection: IP 54

1) Fibreglass-reinforced plastic

Nominal data	Air flow	Air flow	**Nominal voltage**	Voltage range	Sound pressure level	Sound power level	Sintec sleeve bearings / Ball bearings	Input power*	Nominal speed	Temperature range	Service life L_{10} (40 °C) ebm-papst Standard	Service life L_{10} (T_{max}) ebm-papst Standard	Life expectancy L_{10IPC} (40 °C) see page 17	Curve
Type	**m³/h**	**CFM**	**VDC**	**VDC**	**dB(A)**	**Bel(A)**	□/■	**Watts**	**rpm**	**°C**	**Hours**		**Hours**	
5112 N	260	153	**12**	6...15	48	6,1	■	9,5	2 900	-25...+72	80 000 / 37 500		135 000	①
5114 N	260	153	**24**	12...30	48	6,1	■	9,5	2 900	-25...+72	80 000 / 37 500		135 000	①
5118 N	260	153	**48**	24...60	48	6,1	■	9,5	2 900	-25...+72	80 000 / 37 500		135 000	①

Subject to alternations

* Input power at free air flow, these values can be significantly higher in the operating point.

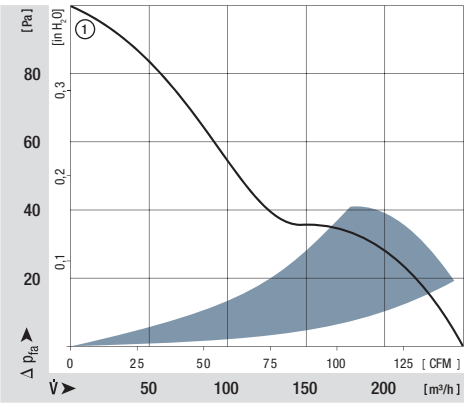

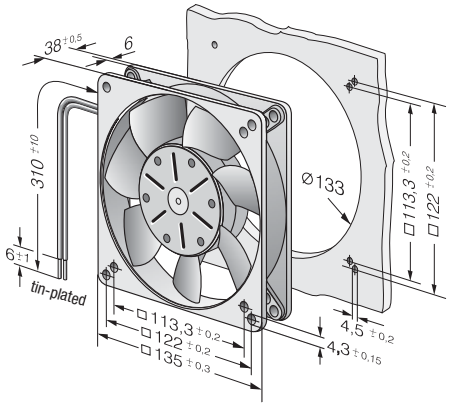

Guard grilles from p. 238

max. 340 m³/h

S-Force

DC axial fans

Series 5300 140 x 140 x 51 mm

- **Material:** Housing: Die-cast aluminium
  Impeller: GRP[1)] (PA)
- **Direction of air flow:** Intake over struts
- **Direction of rotation:** Counter-clockwise, seen on rotor
- **Connection:** Via single wires AWG 22, TR 64
- **Highlights:** Housing with grounding lug for screw M4 x 8 (Torx)
- **Mass:** 900 g

- **Possible special versions:**
  (See chapter DC fans - specials)
  - Speed signal
  - Go / No-go alarm
  - Alarm with limit speed
  - External temperature sensor
  - Internal temperature sensor
  - PWM control input
  - Analogue control input
  - Protection against moisture
  - Protection against salt fog
  - Type of protection: IP 54

1) Fibreglass-reinforced plastic

Nominal data	Air flow	Air flow	Nominal voltage	Voltage range	Sound pressure level	Sound power level	Sintec sleeve bearings Ball bearings	Input power*	Nominal speed	Temperature range	Service life L_{10} (40 °C) ebm-papst Standard / Service life L_{10} (T_{max}) ebm-papst Standard	Life expectancy L_{10IPC} (40 °C) see page 17	Curve
Type	**m³/h**	**CFM**	**VDC**	**VDC**	**dB(A)**	**Bel(A)**	□/■	**Watts**	**rpm**	**°C**	**Hours**	**Hours**	
5314/2 HP	340	200	**24**	16...28	64	7,2	■	28,4	5 000	-20...+65	77 500 / 40 000	130 000	①
5318/2 HP	340	200	**48**	36...72	64	7,2	■	27	5 000	-20...+65	77 500 / 40 000	130 000	①

Subject to alternations

Speed control range from 700 rpm up to maximum nominal speed. Stationary at 0 % PWM, maximum speed at sensor break.
* Input power at free air flow, these values can be significantly higher in the operating point.

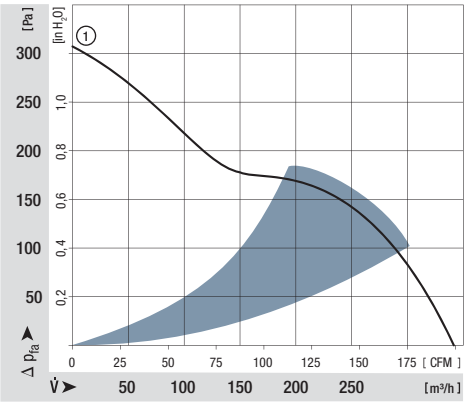

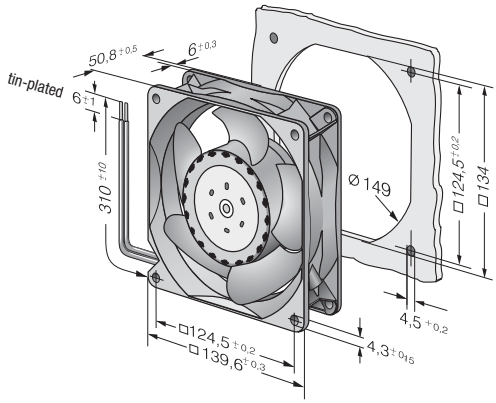

max. 670 m³/h

S-Force

DC axial fans

Series 5300 TD 140 x 140 x 51 mm

- **Material:** Housing: Die-cast aluminium
  Impeller: GRP[1)] (PA)
- **Direction of air flow:** Intake over struts
- **Direction of rotation:** Counter-clockwise, seen on rotor
- **Connection:** Via single wires AWG 20 and AWG 22, TR 64
- **Highlights:** 3-phase fan drive with very smooth running and high efficiency
- **Mass:** 900 g

1) Fibreglass-reinforced plastic

- **Possible special versions:**
  (See chapter DC fans - specials)
  - Speed signal
  - Go / No-go alarm
  - Alarm with limit speed
  - External temperature sensor
  - Internal temperature sensor
  - PWM control input
  - Analogue control input
  - Multi-option control input
  - Protection against moisture
  - Protection against salt fog
  - Type of protection: IP 54 / IP 68

Nominal data	Air flow	Air flow	Nominal voltage	Voltage range	Sound pressure level	Sound power level	Sintec sleeve bearings / Ball bearings	Input power*	Nominal speed	Temperature range	Service life L_{10} (40 °C) ebm-papst Standard / Service life L_{10} (T_{max}) ebm-papst Standard	Life expectancy L_{10IPC} (40 °C) see page 17	Curve
Type	**m³/h**	**CFM**	**VDC**	**VDC**	**dB(A)**	**Bel(A)**	□/■	**Watts**	**rpm**	**°C**	**Hours**	**Hours**	
5312/2 TDHP	410	241	**12**	8...16	70	7,7	■	43	6 000	-20...+70	70 000 / 35 000	117 500	①
5314/2 TDHP	410	241	**24**	16...36	70	7,7	■	42	6 000	-20...+70	70 000 / 35 000	117 500	①
5314/2 TDHHP	490	288	**24**	16...36	75	8,1	■	67	7 000	-20...+70	62 500 / 30 000	105 000	②
5318/2 TDHP	410	241	**48**	36...72	70	7,7	■	42	6 000	-20...+70	70 000 / 35 000	117 500	①
5318/2 TDHHP	490	288	**48**	36...72	75	8,1	■	66	7 000	-20...+70	62 500 / 30 000	105 000	②
5318/2 TDH4P	670	394	**48**	36...72	79	8,8	■	149	9 200	-20...+65	57 500 / 32 500	97 500	③

Subject to alternations

Speed control range from 1000 rpm up to maximum nominal speed. Stationary at 0 % PWM, maximum speed at sensor break.
* Input power at free air flow, these values can be significantly higher in the operating point.

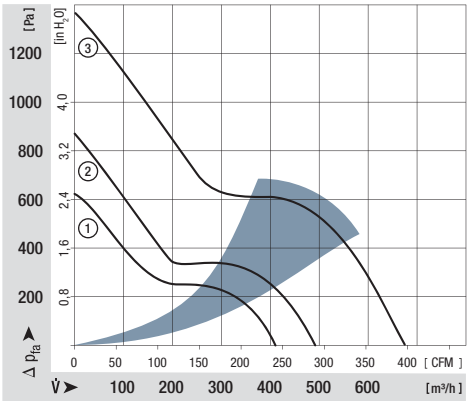

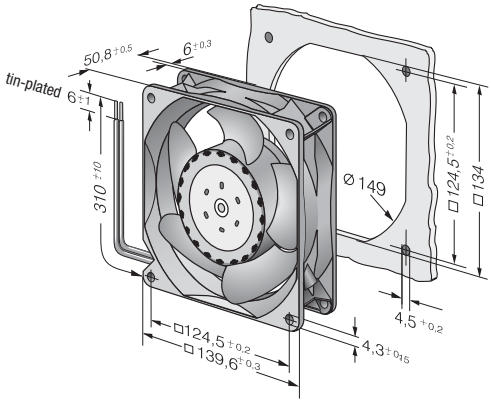

Guard grilles from p. 238

ebmpapst

max. 360 m³/h

DC axial fans

Series 7100 N Ø 150 x 38 mm

- **Material:** Housing: Die-cast aluminium
  Impeller: Painted sheet steel
- **Direction of air flow:** Exhaust over struts
- **Direction of rotation:** Counter-clockwise, seen on rotor
- **Connection:** Via single wires AWG 22, TR 64
- **Highlights:** Housing with grounding lug for screw M4 x 8 (Torx)
- **Mass:** 620 g

- **Possible special versions:**
  (See chapter DC fans - specials)
  - Speed signal
  - Go / No-go alarm
  - Alarm with limit speed
  - External temperature sensor
  - Internal temperature sensor
  - PWM control input
  - Analogue control input
  - Protection against moisture
  - Protection against salt fog
  - Type of protection: IP 54 / IP 68

Nominal data	Air flow	Air flow	Nominal voltage	Voltage range	Sound pressure level	Sound power level	Sintec sleeve bearings Ball bearings	Input power*	Nominal speed	Temperature range	Service life L_{10} (40 °C) ebm-papst Standard / Service life L_{10} (T_{max}) ebm-papst Standard	Life expectancy L_{10IPC} (40 °C) see page 17	Curve
Type	**m³/h**	**CFM**	**VDC**	**VDC**	**dB(A)**	**Bel(A)**	□/■	**Watts**	**rpm**	**°C**	**Hours**	**Hours**	
7112 N	308	181	**12**	6...15	53	6,2	■	12,0	2 850	-25...+72	80 000 / 37 500	135 000	①
7114 N	308	181	**24**	12...30	53	6,2	■	12,0	2 850	-25...+72	80 000 / 37 500	135 000	①
7114 NH	360	212	**24**	12...26,5	58	6,7	■	19,0	3 350	-25...+72	75 000 / 35 000	127 500	②
7118 N	308	181	**48**	24...60	53	6,2	■	12,0	2 850	-25...+72	80 000 / 37 500	135 000	①

Subject to alternations

* Input power at free air flow, these values can be significantly higher in the operating point.

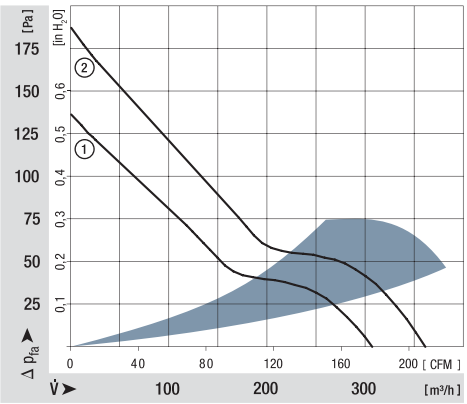

Strand fastened using cable tie; cable tie protrudes 1 mm.

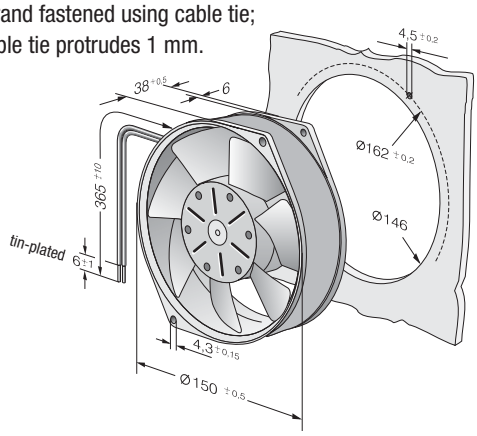

max. 360 m³/h

DC axial fans

Series 7200 N Ø 150 x 55 mm

- **Material:** Housing: Die-cast aluminium
  Impeller: GRP[1)] (PA)
- **Direction of air flow:** Exhaust over struts
- **Direction of rotation:** Counter-clockwise, seen on rotor
- **Connection:** Via single wires AWG 22, TR 64
- **Highlights:** Housing with grounding lug for screw M4 x 8 (Torx)
- **Mass:** 725 g

- **Possible special versions:**
  (See chapter DC fans - specials)
  - Speed signal
  - Go / No-go alarm
  - Alarm with limit speed
  - External temperature sensor
  - Internal temperature sensor
  - PWM control input
  - Analogue control input
  - Protection against moisture
  - Protection against salt fog
  - Type of protection: IP 54 / IP 68

1) Fibreglass-reinforced plastic

Nominal data	Air flow	Air flow	Nominal voltage	Voltage range	Sound pressure level	Sound power level	Sintec sleeve bearings / Ball bearings	Input power*	Nominal speed	Temperature range	Service life L_{10} (40 °C) ebm-papst Standard / Service life L_{10} (T_{max}) ebm-papst Standard	Life expectancy L_{10IPC} (40 °C) see page 17	Curve
Type	m³/h	CFM	VDC	VDC	dB(A)	Bel(A)	□/■	Watts	rpm	°C	Hours	Hours	
7212 N	360	212	**12**	6...15	53	6,2	■	12,0	3 050	-25...+72	80 000 / 37 500	135 000	①
7214 N	360	212	**24**	12...30	53	6,2	■	12,0	3 050	-25...+72	80 000 / 37 500	135 000	①
7218 N	360	212	**48**	24...60	53	6,2	■	12,0	3 050	-25...+72	80 000 / 37 500	135 000	①

Subject to alternations

* Input power at free air flow, these values can be significantly higher in the operating point.

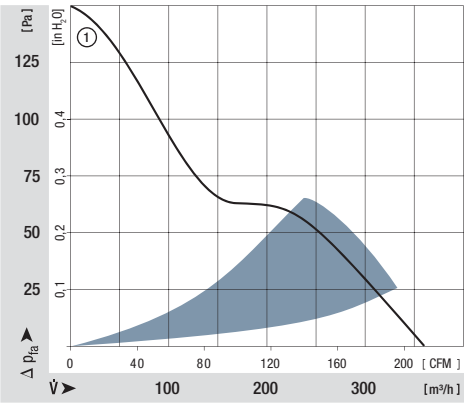

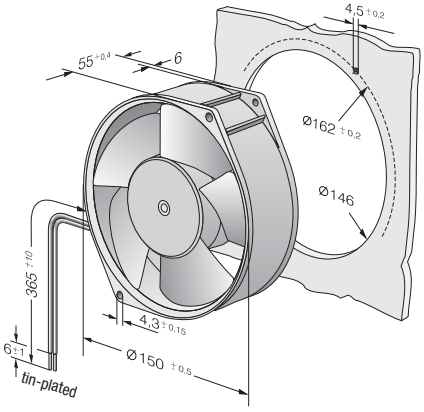

Guard grilles from p. 238

ebmpapst

max. 350 m³/h

DC axial fans

Series 6100 N 172 x 160 x 52 mm

- **Material:** Housing: GRP[1)] (PBT)
  Impeller: GRP[1)] (PA)
- **Direction of air flow:** Exhaust over struts
- **Direction of rotation:** Counter-clockwise, seen on rotor
- **Connection:** Via single wires AWG 22, TR 64
- **Highlights:** Light and compact plastic housing
- **Mass:** 610 g

- **Possible special versions:**
  (See chapter DC fans - specials)
  - Speed signal
  - Go / No-go alarm
  - Alarm with limit speed
  - External temperature sensor
  - Internal temperature sensor
  - PWM control input
  - Analogue control input
  - Protection against moisture
  - Type of protection: IP 54

1) Fibreglass-reinforced plastic

Nominal data	Air flow	Air flow	Nominal voltage	Voltage range	Sound pressure level	Sound power level	Sintec sleeve bearings / Ball bearings	Input power*	Nominal speed	Temperature range	Service life L_{10} (40 °C) ebm-papst Standard / Service life L_{10} (T_{max}) ebm-papst Standard	Life expectancy L_{10IPC} (40 °C) see page 17	Curve
Type	**m³/h**	**CFM**	**VDC**	**VDC**	**dB(A)**	**Bel(A)**	□/■	**Watts**	**rpm**	**°C**	**Hours**	**Hours**	
6112 NM	350	206	**12**	8...15	49	5,9	■	11	2 850	-20...+70	80 000 / 40 000	135 000	①
6114 NM	350	206	**24**	12...32	49	5,9	■	11	2 850	-20...+70	80 000 / 40 000	135 000	①

Subject to alternations

* Input power at free air flow, these values can be significantly higher in the operating point.

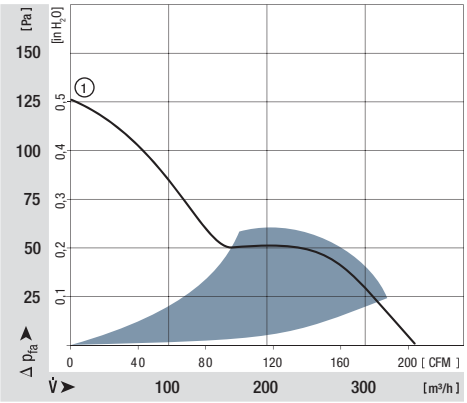

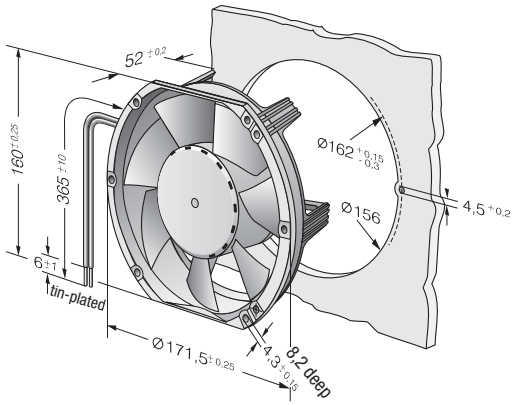

max. 545 m³/h

S-Force

DC axial fans

Series 6300 Ø 172 x 51 mm

- **Material:** Housing: Die-cast aluminium
  Impeller: GRP[1)] (PA)
- **Direction of air flow:** Exhaust over struts
- **Direction of rotation:** Counter-clockwise, seen on rotor
- **Connection:** Via single wires AWG 22, TR 64
- **Highlights:** Housing with grounding lug for screw M4 x 8 (Torx)
- **Mass:** 910 g

- **Possible special versions:**
  (See chapter DC fans - specials)
  - Speed signal
  - Go / No-go alarm
  - Alarm with limit speed
  - External temperature sensor
  - Internal temperature sensor
  - PWM control input
  - Analogue control input
  - Protection against moisture
  - Protection against salt fog
  - Type of protection: IP 54

1) Fibreglass-reinforced plastic

Nominal data	Air flow	Air flow	Nominal voltage	Voltage range	Sound pressure level	Sound power level	Sintec sleeve bearings / Ball bearings	Input power*	Nominal speed	Temperature range	Service life L_{10} (40 °C) ebm-papst Standard / Service life L_{10} (T_{max}) ebm-papst Standard	Life expectancy L_{10IPC} (40 °C) see page 17	Curve
Type	**m³/h**	**CFM**	**VDC**	**VDC**	**dB(A)**	**Bel(A)**	□/■	**Watts**	**rpm**	**°C**	**Hours**	**Hours**	
6314/2 MP	395	232	**24**	16...30	51	6,0	■	14	3 700	-20...+75	82 500 / 32 500	140 000	①
6314/2 NP	470	276	**24**	16...30	56	6,5	■	23	4 400	-20...+70	80 000 / 40 000	135 000	②
6314/2 HP	545	320	**24**	16...30	58	6,9	■	31	5 000	-20...+65	77 500 / 42 500	130 000	③
6318/2 HP	545	320	**48**	36...72	58	6,9	■	32	5 000	-20...+65	77 500 / 42 500	130 000	③

Subject to alternations

Speed control range from 700 rpm up to maximum nominal speed. Stationary at 0 % PWM, maximum speed at sensor break.
* Input power at free air flow, these values can be significantly higher in the operating point.

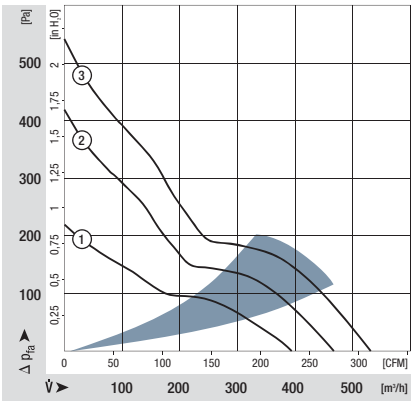

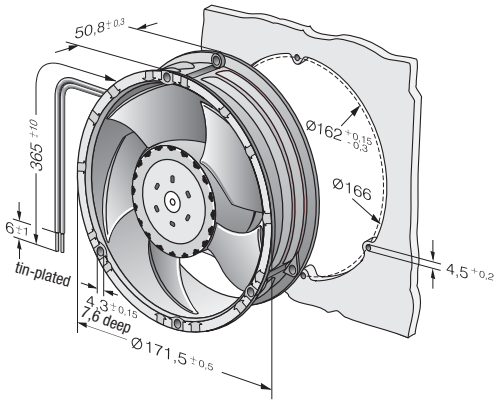

Guard grilles from p. 238

ebmpapst

max. 930 m³/h

S-Force

DC axial fans

Series 6300 TD Ø 172 x 51 mm

- **Material:** Housing: Die-cast aluminium Impeller: GRP[1)] (PA)
- **Direction of air flow:** Exhaust over struts
- **Direction of rotation:** Counter-clockwise, seen on rotor
- **Connection:** Via single wires AWG 18, 20 or AWG 22, TR 64, speed signal and control input AWG 22
- **Highlights:** 3-phase fan drive with very smooth running and high efficiency. Housing with grounding lug for screw M4 x 8 (Torx)
- **Mass:** 910 g

1) Fibreglass-reinforced plastic

- **Possible special versions:**
  (See chapter DC fans - specials)
  - Speed signal
  - Go / No-go alarm
  - Alarm with limit speed
  - External temperature sensor
  - Internal temperature sensor
  - PWM control input
  - Analogue control input
  - Multi-option control input
  - Protection against moisture
  - Protection against salt fog
  - Type of protection: IP 54

Nominal data		Air flow	Air flow	Nominal voltage	Voltage range	Sound pressure level	Sound power level	Sintec sleeve bearings / Ball bearings	Input power*	Nominal speed	Temperature range	Service life L_{10} (40 °C) ebm-papst Standard / Service life L_{10} (T_{max}) ebm-papst Standard	Life expectancy L_{10IPC} (40 °C) see page 17	Curve
	Type	m³/h	CFM	VDC	VDC	dB(A)	Bel(A)	□/■	Watts	rpm	°C	Hours	Hours	
	6312/2 TDHP	600	353	**12**	8...16	60	7,3	■	40	5 500	-20...+70	75 000 / 37 500	127 500	②
NEW	6314/2 TDHP-298	600	353	**24**	16...30	60	7,3	■	42	5 500	-20...+65	75 000 / 42 500	127 500	①
	6314/2 TDHP	600	353	**24**	16...36	60	7,3	■	40	5 500	-20...+75	75 000 / 30 000	127 500	②
	6314/2 TDHHP	710	418	**24**	16...36	69	7,9	■	67	7 000	-20...+75	62 500 / 25 000	105 000	③
NEW	6314/2 TDH4P	930	545	**24**	16...36	75	8,4	■	150	9 200	-20...+75	52 500 / 20 000	87 500	⑤
NEW	6318/2 TDHP-299	600	353	**48**	36...60	60	7,3	■	42	5 500	-20...+65	75 000 / 42 500	127 500	①
	6318/2 TDHP	600	353	**48**	36...72	60	7,3	■	40	5 500	-20...+75	75 000 / 30 000	127 500	②
	6318/2 TDHHP	710	418	**48**	36...72	69	7,9	■	67	7 000	-20...+75	62 500 / 25 000	105 000	③
	6318/2 TDH4P	930	545	**48**	36...72	75	8,4	■	150	9 200	-20...+75	52 500 / 20 000	87 500	④

Subject to alternations

Speed control range from 1000 rpm up to maximum nominal speed. Stationary at 0 % PWM, maximum speed at sensor break.
* Input power at free air flow, these values can be significantly higher in the operating point.

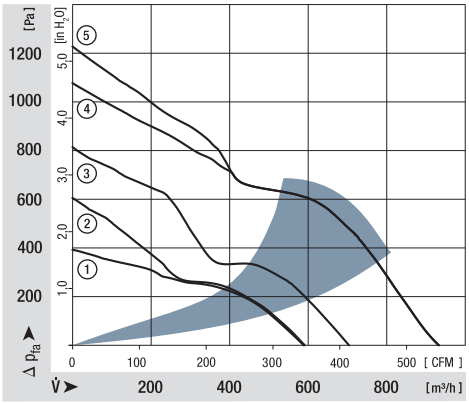

*** Input power - in operation**

Fan type	optimum operating range (W)
6318/2 TDHHP	115
6318/2 TDH4P	270

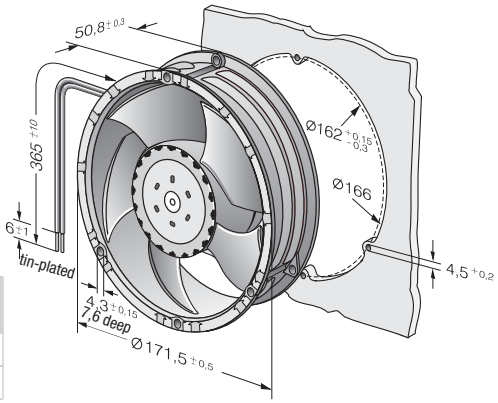

max. 930 m³/h

S-Force

DC axial fans

Series 6300 TD 172 x 160 x 51 mm

- **Material:** Housing: Die-cast aluminium
  Impeller: GRP[1)] (PA)
- **Direction of air flow:** Exhaust over struts
- **Direction of rotation:** Counter-clockwise, seen on rotor
- **Connection:** Via single wires AWG 18, 20 or AWG 22, TR 64, speed signal and control input AWG 22
- **Highlights:** 3-phase fan drive with very smooth running and high efficiency. Housing with grounding lug for screw M4 x 8 (Torx)
- **Mass:** 910 g

1) Fibreglass-reinforced plastic

- **Possible special versions:**
  (See chapter DC fans - specials)
  - Speed signal
  - Go / No-go alarm
  - Alarm with limit speed
  - External temperature sensor
  - Internal temperature sensor
  - PWM control input
  - Analogue control input
  - Multi-option control input
  - Protection against moisture
  - Protection against salt fog
  - Type of protection: IP 54

Nominal data	Air flow	Air flow	**Nominal voltage**	Voltage range	Sound pressure level	Sound power level	Sintec sleeve bearings / Ball bearings	Input power*	Nominal speed	Temperature range	Service life L_{10} (40 °C) ebm-papst Standard / Service life L_{10} (T_{max}) ebm-papst Standard	Life expectancy L_{10IPC} (40 °C) see page 17	Curve
Type	**m³/h**	**CFM**	**VDC**	**VDC**	**dB(A)**	**Bel(A)**	□/■	**Watts**	**rpm**	**°C**	**Hours**	**Hours**	
6314/2 TDHHP-015	710	418	**24**	16...36	69	7,9	■	67	7 000	-20...+75	62 500 / 25 000	105 000	①
6318/2 TDH4P-007	930	546	**48**	36...72	75	8,4	■	150	9 200	-20...+75	52 500 / 20 000	87 500	②

Subject to alternations

Speed control range from 1000 rpm up to maximum nominal speed. Stationary at 0 % PWM, maximum speed at sensor break.
* Input power at free air flow, these values can be significantly higher in the operating point.

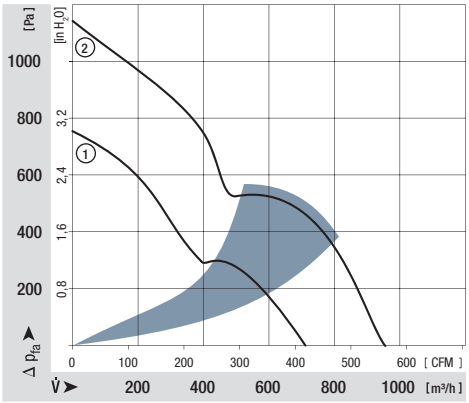

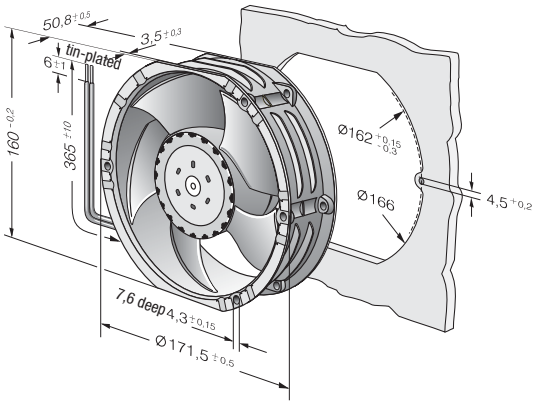

Guard grilles from p. 238

ebmpapst

max. 1030 m³/h

S-Panther

DC axial fans

Series 6300 N Ø 172 x 51 mm

- **Material:** Housing: Die-cast aluminium
  Impeller: GRP [1] (PA)
- **Direction of air flow:** Exhaust over struts
- **Direction of rotation:** Counter-clockwise, seen on rotor
- **Connection:** AWG 18, 20 UL 1007, TR 64, speed signal and control input AWG 22, UL 1007, TR 64
- **Highlights:** 3-phase fan drive with very smooth running and hight efficiency. Housing with grounding lug for screw M4 x 8 (Torx)
- **Mass:** 850 g

1) Glass fibre reinforced plastic

- **Possible special versions:**
  (See chapter DC-fans - specials)
  - Speed signal
  - Go / No-go alarm
  - Alarm with limit speed
  - External temperature sensor
  - Internal temperature sensor
  - PWM control input (Standard)
  - Analogue control input
  - Multi-option control input
  - Protection against moisture
  - Protection against salt spray fog
  - Protection class: IP 54

	Nominal data	Air flow	Air flow	Nominal voltage	Voltage range	Sound pressure level	Sound power level	Sintec sleeve bearings / Ball bearings	Input power*	Nominal speed	Temperature range	Service life L_{10} (40 °C) ebm-papst Standard / Service life L_{10} (T_{max}) ebm-papst Standard	Life expectancy L_{10IPC} (40 °C)	Curve
	Type	**m³/h**	**CFM**	**VDC**	**VDC**	**dB(A)**	**Bel(A)**	**□ / ■**	**Watt**	**min⁻¹**	**°C**	**hours**	**hours**	
NEU	6314 N/2 TDHHP	970	571	**24**	16…36	-	8,3	■	135	7200	-20…+70	62.500 / 32.500	105.000	①
NEU	6318 N/2 TDH3P	1030	606	**48**	36…72	83	8,4	■	152	7500	-20…+70	60.000 / 30.000	102.500	②

Subject to alternations

Speed control range from 1000 RPM up to maximum nominal speed. Stationary at 0 % PWM, maximum speed at sensor break.
* Input power at free air flow, these values can be significantly higher in the operating point.

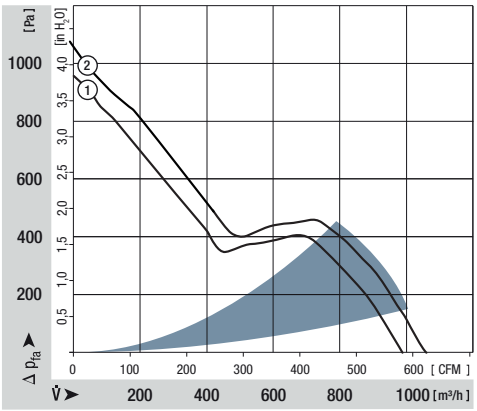

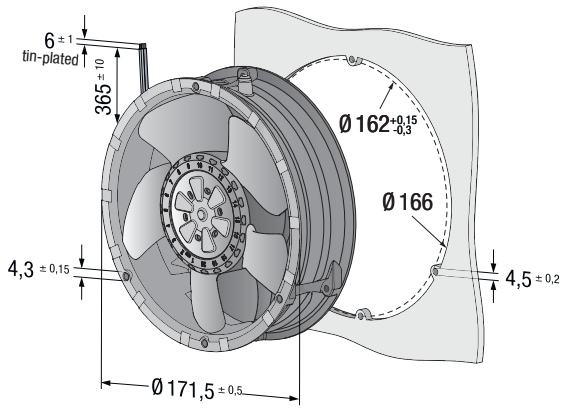

Guard grilles
from p. 238

max. 1100 m³/h

S-Force

DC diagonal fans

Series DV 6300 Ø 172 x 51 mm

- **Material:** Housing: Die-cast aluminium Impeller: GRP[1] (PA)
- **Direction of air flow:** Exhaust over struts
- **Direction of rotation:** Counter-clockwise, seen on rotor
- **Connection:** (+) and GND: AWG 18, UL 1007, TR 64, speed signal and control input AWG 22, UL 1007, TR 64
- **Highlights:** 3-phase fan drive with very smooth running and high efficiency. Housing with grounding lug for screw M4 x 8 (Torx)
- **Mass:** 1050 g

1) Fibreglass-reinforced plastic

- **Possible special versions:** (See chapter DC fans - specials)
  - Speed signal
  - Go / No-go alarm
  - Alarm with limit speed
  - External temperature sensor
  - Internal temperature sensor
  - PWM control input
  - Analogue control input
  - Multi-option control input
  - Protection against moisture
  - Protection against salt fog
  - Type of protection: IP 54

	Nominal data	Air flow	Air flow	Nominal voltage	Voltage range	Sound pressure level	Sound power level	Sintec sleeve bearings Ball bearings	Input power	Nominal speed	Temperature range	Service life L_{10} (40 °C) ebm-papst Standard / Service life L_{10} (T_{max}) ebm-papst Standard	Life expectancy L_{10IPC} (40 °C) see page 17	Curve
	Type	m³/h	CFM	VDC	VDC	dB(A)	Bel(A)	□/■	Watts	rpm	°C	Hours	Hours	
NEW	DV 6318/2 TDHHP*	630	371	**48**	36…72	68	7,6	■	75	4000	-20…+65	70 000 / 40 000	117 500	①
NEW	DV 6318/2 TDH3P*	770	453	**48**	36…72	73	8,0	■	135	4900	-20…+65	60 000 / 32 500	102 500	②
NEW	DV 6318/2 TDH4P	1050	617	**48**	36…72	77	8,7	■	300	6500	-20…+65	50 000 / 27 500	85 000	③
NEW	DV 6318/2 TDH5P**	1100	647	**48**	36…72	79	8,9	■	360	6800	-20…+65	40 000 / 22 500	67 500	④

* On request

** Rotor protrusion a = 3 mm

Subject to alternations

Speed control range from 1000 rpm up to maximum nominal speed. Stationary at 0 % PWM, maximum speed at sensor break.
The fans have a speed increase of up to 30%, thus producing a more even characteristic curve.

		n rpm	P_{ed} W	Lw_A dB(A)	L_{10} (40 °C)	L_{10} (65 °C)	L_{10IPC} (40 °C)
①	❶	4000	65,5	79	70 000	40 000	117 500
①	❷	3835	64,5	78	72 500	40 000	122 500
①	❸	3815	64,5	76	75 000	42 500	127 500
①	❹	3930	65	76	77 500	42 500	130 000
①	❺	4240	66	79	77 500	42 500	130 000
②	❶	4900	120	83	60 000	32 500	102 500
②	❷	4690	119	82	67 500	37 500	115 000
②	❸	4670	119	80	72 500	40 000	122 500
②	❹	4870	120	81	75 000	42 500	127 500
②	❺	5190	121	85	75 000	42 500	127 500

		n rpm	P_{ed} W	Lw_A dB(A)	L_{10} (40 °C)	L_{10} (65 °C)	L_{10IPC} (40 °C)
③	❶	6500	280	90	50 000	27 500	85 000
③	❷	6230	275	89	62 500	35 000	105 000
③	❸	6200	280	88	70 000	40 000	117 500
③	❹	6450	281	88	72 500	40 000	122 500
③	❺	6900	283	92,5	72 500	40 000	122 500
④	❶	6950	345	92	40 000	22 500	67 500
④	❷	6720	345	91	57 500	32 500	97 500
④	❸	6630	345	89,5	62 500	35 000	105 000
④	❹	6850	345	89	67 500	37 500	115 000
④	❺	7300	345	94	72 500	40 000	122 500

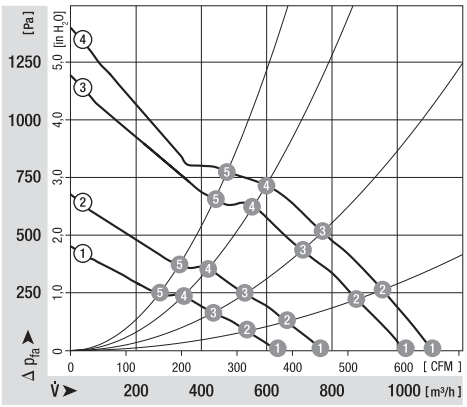

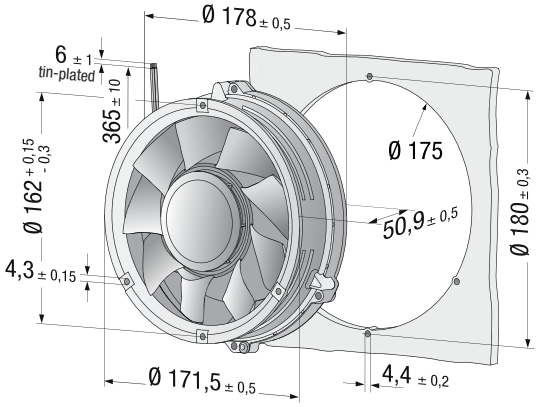

max. 480 m³/h

DC axial fans

Series 6400 172 x 150 x 51 mm

- **Material:** Housing: Die-cast aluminium
  Impeller: GRP[1)] (PA)
- **Direction of air flow:** Exhaust over struts
- **Direction of rotation:** Counter-clockwise, seen on rotor
- **Connection:** On flat plugs 3 x 0.5 mm
- **Highlights:** Housing with grounding lug for screw M4 x 8 (Torx)
- **Mass:** 760 g

- **Possible special versions:**
  (See chapter DC fans - specials)
  - Speed signal
  - Go / No-go alarm
  - Alarm with limit speed
  - External temperature sensor
  - Internal temperature sensor
  - PWM control input
  - Analogue control input
  - Protection against moisture
  - Protection against salt fog
  - Type of protection: IP 54

1) Fibreglass-reinforced plastic

Nominal data	Air flow	Air flow	Nominal voltage	Voltage range	Sound pressure level	Sound power level	Sintec sleeve bearings / Ball bearings	Input power***	Nominal speed	Temperature range	Service life L_{10} (40 °C) ebm-papst Standard / Service life L_{10} (T_{max}) ebm-papst Standard	Life expectancy L_{10IPC} (40 °C) see page 17	Curve
Type	**m³/h**	**CFM**	**VDC**	**VDC**	**dB(A)**	**Bel(A)**	□/■	**Watts**	**rpm**	**°C**	**Hours**	**Hours**	
6412 M	350	206	**12**	8...15	52	6,0	■	12	2 850	-20...+72	80 000 / 37 500	135 000	①
6424 M	350	206	**24**	12...32	52	6,0	■	12	2 850	-20...+72	80 000 / 37 500	135 000	①
6424	410	241	**24**	12...28	57	6,4	■	17	3 400	-20...+72	75 000 / 35 000	127 500	②
6424 H	480	283	**24**	12...28	63	7,1	■	26	4 000	-20...+55**	70 000 / 50 000	117 500	③
6448	410	241	**48**	28...60	57	6,4	■	17	3 400	-20...+72	75 000 / 35 000	127 500	②
6448 H*	480	283	**48**	28...60	63	7,1	■	26	4 000	-20...+55**	70 000 / 50 000	117 500	③

Subject to alternations

* Strand 310 mm.
** 72 °C versions on request
*** Input power at free air flow, these values can be significantly higher in the operating point.

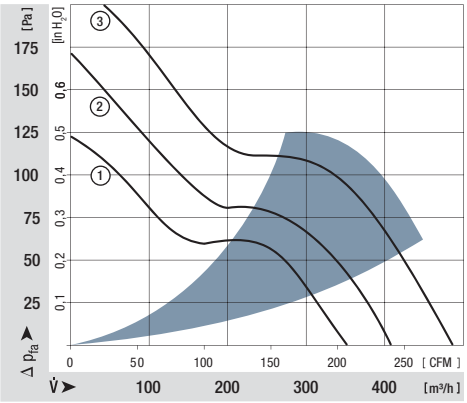

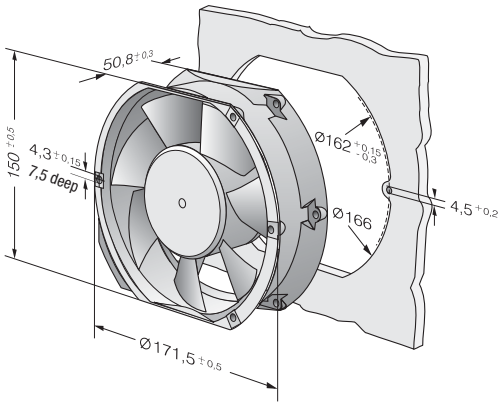

Guard grilles from p. 238
Connection cables from p. 251

max. 900 m³/h

DC axial fans

Series 6400 TD TURBOFAN 172 x 150 x 51 mm

- **Material:** Housing: Die-cast aluminium Impeller: GRP[1] (PA)
- **Direction of air flow:** Exhaust over struts
- **Direction of rotation:** Counter-clockwise, seen on rotor
- **Connection:** Via single wires AWG 18, 20 or AWG 22, TR 64, speed signal and control input AWG 22
- **Highlights:** 3-phase fan drive with very smooth running and high efficiency. Housing with grounding lug for screw M4 x 8 (Torx)
- **Mass:** 760 g

1) Fibreglass-reinforced plastic

- **Possible special versions:** (See chapter DC fans - specials)
  - Speed signal
  - Go / No-go alarm
  - Alarm with limit speed
  - External temperature sensor
  - Internal temperature sensor
  - PWM control input
  - Analogue control input
  - Protection against moisture
  - Protection against salt fog
  - Type of protection: IP 54
  - Reversible direction of rotation

Nominal data		Air flow	Air flow	Nominal voltage	Voltage range	Sound pressure level	Sound power level	Sintec sleeve bearings Ball bearings	Input power**	Nominal speed	Temperature range	Service life L_{10} (40 °C) ebm-papst Standard / Service life L_{10} (T_{max}) ebm-papst Standard	Life expectancy L_{10IPC} (40 °C) see page 17	Curve
Type		m³/h	CFM	VDC	VDC	dB(A)	Bel(A)	□/■	Watts	rpm	°C	Hours	Hours	
min	6424 TD...	90	53	24	16...28	18	—	■	2	800	-20...+60	70 000 / 45 000	117 500	①
max		600	353			65	7,4		50	5 100				②
min	6448 TD...	90	53	48	40...55*	18	—	■	2	800	-20...+60	70 000 / 45 000	117 500	①
max		600	353			65	7,4		50	5 100				②
min	6448 TDHH...	90	53	48	36...72	18	—	■	2	800	-20...+60	70 000 / 45 000	117 500	①
max		900	530			78	8,6		163	7500				③

Subject to alternations

* Variants with an extended voltage range available to deliver on request.

Models 6424 TD..., 6448 TD... and 6448 TDHH... are available in customer-specific, custom-developed variants only.
The data specified here is technically feasible benchmark values. The fans can be specially adapted to your application with signal outputs and control inputs.
For details of the technical possibilities, refer to the chapters on the sensor signal, alarm signal and control inputs beginning on page 161.
** Input power at free air flow, these values can be significantly higher in the operating point.

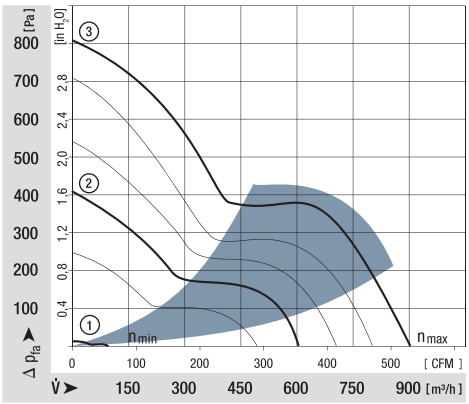

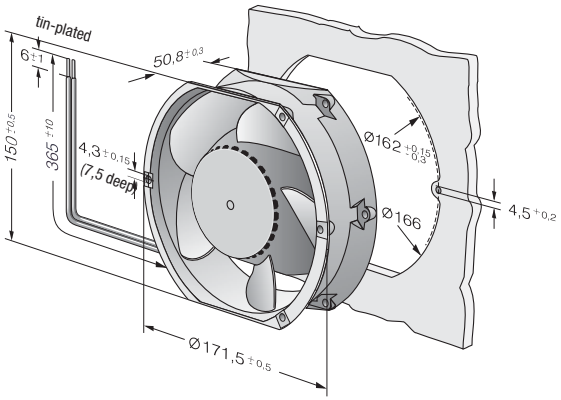

max. 530 m³/h

DC diagonal fans

Series DV 6400 172 x 160 x 51 mm

- **Material:** Housing: Die-cast aluminium
  Impeller: GRP[1)] (PA)
- **Direction of air flow:** Exhaust over struts
- **Direction of rotation:** Counter-clockwise, seen on rotor
- **Connection:** Via single wires AWG 22, TR 64
- **Highlights:** Housing with grounding lug for screw M4 x 8 (Torx)
- **Mass:** 820 g

- **Possible special versions:**
  (See chapter DC fans - specials)
  - Speed signal
  - Go / No-go alarm
  - Alarm with limit speed
  - External temperature sensor
  - Internal temperature sensor
  - PWM control input
  - Analogue control input
  - Protection against moisture
  - Protection against salt fog
  - Type of protection: IP 54

1) Fibreglass-reinforced plastic

Nominal data	Air flow	Air flow	**Nominal voltage**	Voltage range	Sound pressure level	Sound power level	Sintec sleeve bearings / Ball bearings	Input power	Nominal speed	Temperature range	Service life L_{10} (40 °C) ebm-papst Standard	Service life L_{10} (T_{max}) ebm-papst Standard	Life expectancy L_{10IPC} (40 °C) see page 17	Curve
Type	**m³/h**	**CFM**	**VDC**	**VDC**	**dB(A)**	**Bel(A)**	□/■	**Watts**	**rpm**	**°C**	**Hours**		**Hours**	
DV 6424	530	312	**24**	16...28	65	7,3	■	40	4 300	-20...+75	90 000 / 35 000		152 500	①
DV 6448	530	312	**48**	28...60	65	7,3	■	40	4 300	-20...+75	90 000 / 35 000		152 500	①

Subject to alternations

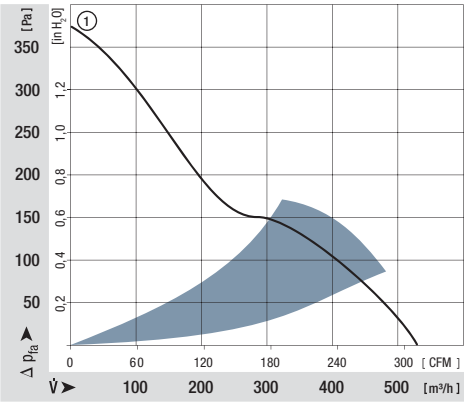

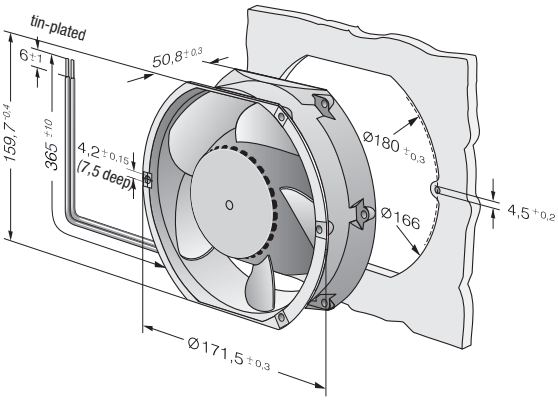

Guard grilles
from p. 238

ebmpapst

max. 680 m³/h

DC diagonal fans

Series DV 6400 TD TURBOFAN 172 x 160 x 51 mm

- **Material:** Housing: Die-cast aluminium
  Impeller: GRP[1)] (PA)
- **Direction of air flow:** Exhaust over struts
- **Direction of rotation:** Counter-clockwise, seen on rotor
- **Connection:** Via single wires AWG 22, TR 64
- **Highlights:** 3-phase fan drive with very smooth running and high efficiency. Housing with grounding lug for screw M4 x 8 (Torx)
- **Mass:** 820 g

1) Fibreglass-reinforced plastic

- **Possible special versions:**
  (See chapter DC fans - specials)
  - Speed signal
  - Go / No-go alarm
  - Alarm with limit speed
  - External temperature sensor
  - Internal temperature sensor
  - PWM control input
  - Analogue control input
  - Protection against moisture
  - Protection against salt fog
  - Type of protection: IP 54
  - Reversible direction of rotation

	Nominal data	Air flow	Air flow	Nominal voltage	Voltage range	Sound pressure level	Sound power level	Sintec sleeve bearings / Ball bearings	Input power*	Nominal speed	Temperature range	Service life L_{10} (40 °C) ebm-papst Standard / Service life L_{10} (T_{max}) ebm-papst Standard	Life expectancy L_{10IPC} (40 °C) see page 17	Curve
	Type	m³/h	CFM	VDC	VDC	dB(A)	Bel(A)	□/■	Watts	rpm	°C	Hours	Hours	
	DV 6424 TD	680	400	**24**	16...28	71	7,9	■	91	5 500	-20...+60	65 000 / 40 000	110 000	②
min	DV 6424 TD...	100	59	**24**	16...28	29	—	■	2	800	-20...+60	65 000 / 40 000	110 000	①
max		680	400			71	7,9		91	5 500				②
min	DV 6448 TD...	100	59	**48**	40...55	29	—	■	2	800	-20...+60	65 000 / 40 000	110 000	①
max		680	400			71	7,9		86	5 500				②

Subject to alternations

Models DV 6424 TD... and DV 6448 TD... are available in customer-specific, custom-developed variants only.
The data specified here is technically feasible benchmark values. The fans can be specially adapted to your application with signal outputs and control inputs.
For details of the technical possibilities, refer to the chapters on the sensor signal, alarm signal and control inputs beginning on page 161.
* Input power at free air flow, these values can be significantly higher in the operating point.

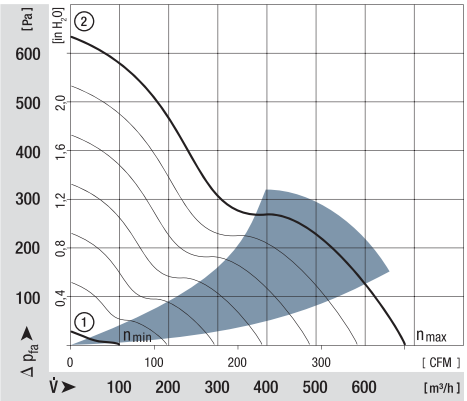

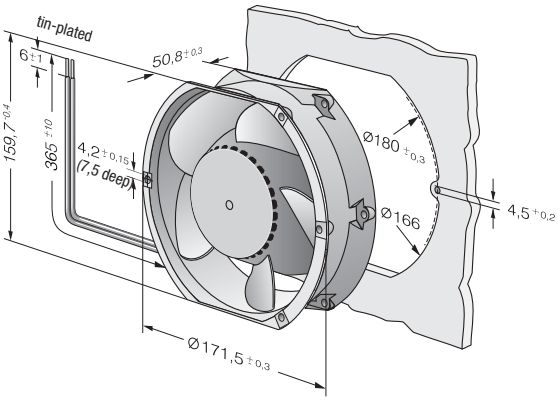

max. 1220 m³/h

S-Force

DC axial fans

Series 2200 FTD 220 x 200 x 51 mm

- **Material:** Housing: Die-cast aluminium Impeller: GRP[1)] (PA)
- **Direction of air flow:** Exhaust over struts
- **Direction of rotation:** Counter-clockwise, seen on rotor
- **Connection:** Via single wires AWG 18, 20 or AWG 22, TR 64, speed signal and control input AWG 22
- **Highlights:** 3-phase fan drive with very smooth running and high efficiency. Housing with grounding lug for screw M4 x 8 (Torx)
- **Mass:** 1000 g

1) Fibreglass-reinforced plastic

- **Possible special versions:**
  (See chapter DC fans - specials)
  - Speed signal
  - Go / No-go alarm
  - Alarm with limit speed
  - External temperature sensor
  - Internal temperature sensor
  - PWM control input
  - Analogue control input
  - Multi-option control input
  - Protection against moisture
  - Protection against salt fog
  - Type of protection: IP 54

Nominal data	Air flow	Air flow	**Nominal voltage**	Voltage range	Sound pressure level	Sound power level	Sintec sleeve bearings / Ball bearings	Input power*	Nominal speed	Temperature range	Service life L_{10} (40 °C) ebm-papst Standard / Service life L_{10} (T_{max}) ebm-papst Standard	Life expectancy L_{10IPC} (40 °C) see page 17	Curve
Type	**m³/h**	**CFM**	**VDC**	**VDC**	**dB(A)**	**Bel(A)**	□/■	**Watts**	**rpm**	**°C**	**Hours**	**Hours**	
2214 F/2 TDHO	790	465	**24**	16...30	62	7,1	■	35	4250	-20...+75	90 000 / 42 500	152 500	①
2214 F/2 TDHHO	940	553	**24**	16...36	66	7,4	■	48	5000	-20...+70	85 000 / 42 500	142 500	②
2218 F/2 TDHO	790	465	**48**	36...57	62	7,1	■	35	4250	-20...+75	90 000 / 42 500	152 500	①
2218 F/2 TDHHO	940	553	**48**	36...72	66	7,4	■	48	5000	-20...+70	85 000 / 42 500	142 500	②
2218 F/2 TDH4P	1220	718	**48**	36...72	72	8,2	■	103	6500	-20...+65	70 000 / 40 000	117 500	③

Subject to alternations

Speed control range from 1000 rpm up to maximum nominal speed. Stationary at 0 % PWM / 0 V,
Type O: stationary at sensor break; Type P: maximum speed at sensor break.
* Input power at free air flow, these values can be significantly higher in the operating point.

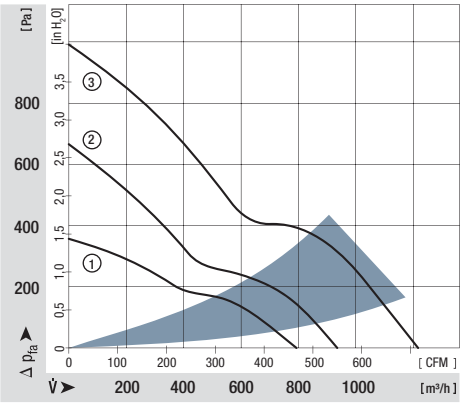

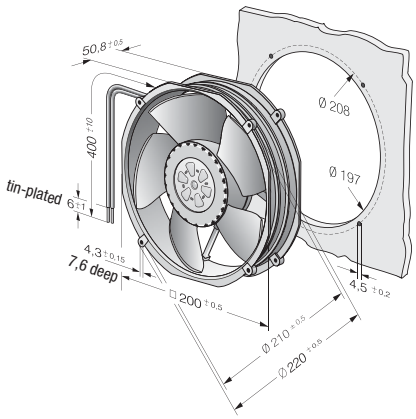

Guard grilles from p. 238

ebmpapst

max. 1000 m³/h

DC axial fans

Series 2200 TD 225 x 225 x 80 mm

- **Material:** Wall ring: Die-cast aluminium
  Impeller: GRP[1)] (PA)
- **Direction of air flow:** Exhaust over struts
- **Direction of rotation:** Counter-clockwise, seen on rotor
- **Connection:** With terminal strip
- **Highlights:** 3-phase fan drive with very smooth running
  Fully integrated electronic commutation
- **Mass:** 2,1 kg

- **Possible special versions:**
  (See chapter DC fans - specials)
  - Speed signal
  - Go / No-go alarm
  - Alarm with limit speed
  - External temperature sensor
  - Internal temperature sensor
  - PWM control input
  - Analogue control input
  - Multi-option control input
  - Protection against moisture
  - Type of protection: IP 54

1) Fibreglass-reinforced plastic

Nominal data	Air flow	Air flow	**Nominal voltage**	Voltage range	Sound pressure level	Sound power level	Sintec sleeve bearings / Ball bearings	Input power*	Nominal speed	Temperature range	Service life L_{10} (40 °C) ebm-papst Standard / Service life L_{10} (T_{max}) ebm-papst Standard	Life expectancy L_{10IPC} (40 °C) see page 17	Curve
Type	**m³/h**	**CFM**	**VDC**	**VDC**	**dB(A)**	**Bel(A)**	□/■	**Watts**	**rpm**	**°C**	**Hours**	**Hours**	
2214/2 TDO	1000	588	**24**	16...30	59	6,8	■	50	3 000	-20...+60	80 000 / 50 000	135 000	①
2218/2 TDO	1000	588	**48**	36...57	59	6,8	■	50	3 000	-20...+60	80 000 / 50 000	135 000	①

Subject to alternations

* Input power at free air flow, these values can be significantly higher in the operating point.

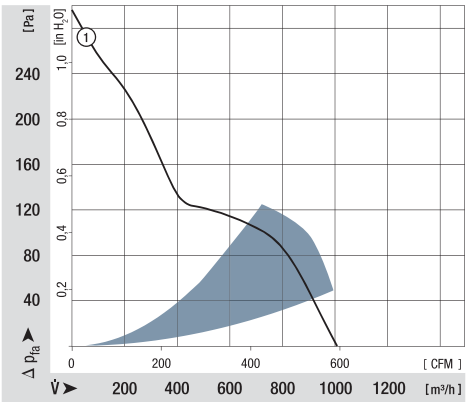

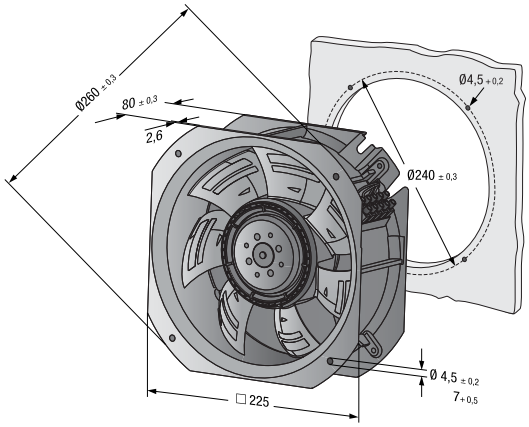

max. 1245 m³/h

DC diagonal module

225 x 225 x 80 mm

- **Material:** Housing: Fibreglass-reinforced plastic (PA6)
  Impeller: Fibreglass-reinforced plastic (PA)
- **Direction of air flow:** Exhaust over struts
- **Direction of rotation:** Clockwise, seen on rotor
- **Connection:** Via connection line AWG 20, 4x brass lead tips crimped
- **Mass:** 1,7 kg
- **Operation mode:** Continuous operation (S1)

Nominal data		Curve	Nominal voltage	Voltage range	Air flow	Speed / rpm	Input power	Current draw	Sound power level	Perm. amb. temp.	Technical features and electrical connections
Type	**Motor**		**VDC**	**VDC**	**m³/h**	**rpm**	**W**	**A**	**dB(A)**	**°C**	
K1G 200-AD65-04	M1G 074-BF	①	24	16...28	1020	3 400	95	4,7	76	-25...+60	p. 258 / J5)
K1G 200-AD31-02	M1G 074-BF	②	24	16...28	1045	3 520	107	5,4	77	-25...+70	p. 258 / J5)
K1G 200-AD49-04	M1G 074-BF	③	48	36...57	1095	3 650	120	3,4	77	-25...+60	p. 258 / J5)
K1G 200-AD37-02	M1G 074-BF	④	48	36...57	1245	4 140	183	5,6	81	-25...+70	p. 258 / J5)

Subject to alternations

		n rpm	P_{ed} W	I A	Lw_A dB(A)
①	1	3400	95	4,70	76
①	2	3410	116	5,61	74
①	3	3410	119	5,75	74
①	4	3410	117	5,62	76
②	1	3520	107	5,30	77
②	2	3520	127	6,24	75
②	3	3520	129	6,31	76
②	4	3520	126	6,18	76
③	1	3650	120	3,40	77
③	2	3650	141	3,90	75
③	3	3650	145	3,99	76
③	4	3650	141	3,88	78
④	1	4140	183	5,60	81
④	2	4090	212	6,46	79
④	3	4060	213	6,52	79
④	4	4110	211	6,43	80

Air performance measured as per: ISO 5801, Installation category A, without protection against accidental contact.

Suction-side noise levels: LWA as per ISO 13347, LpA measured at 1 m distance to fan axis.

The acoustic values given are only valid under the measurment conditions listed and may vary depending on the installation situation.

With any deviation to the standard setup, the specific values have to be checked and reviewed once installed or fitted! For detailed information see http://www.ebmpapst.com/general conditions

Cable assignment:
Red = UN
Yellow = 0-10 VDC
White = Speed monitoring output
Blue = GND

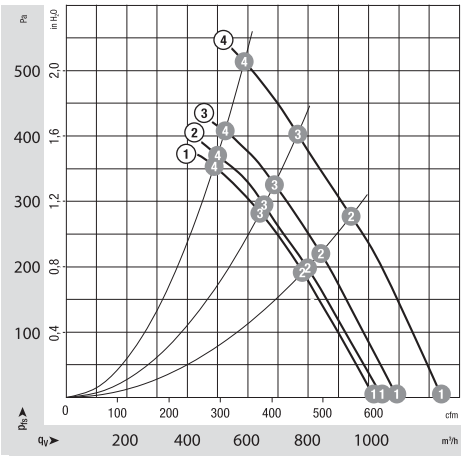

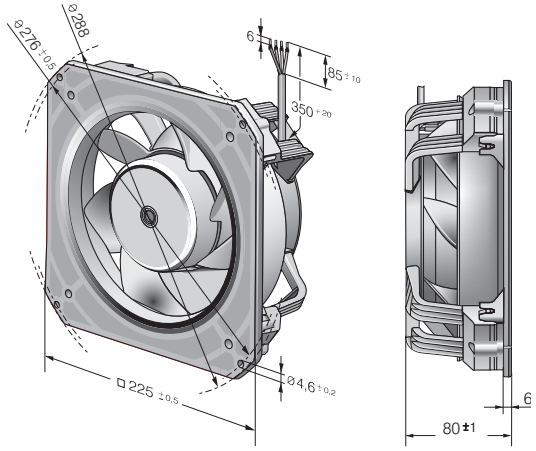

max. 905 m³/h

DC diagonal module

225 x 225 x 89 mm

- **Material:** Housing: Fibreglass-reinforced plastic (PA6)
  Impeller: Fibreglass-reinforced plastic (PA)
- **Direction of air flow:** Exhaust over struts
- **Direction of rotation:** Clockwise, seen on rotor
- **Connection:** Via connection line AWG 16, 4x brass lead tips crimped
- **Mass:** 2,2 kg
- **Operation mode:** Continuous operation (S1)

Nominal data		Curve	Nominal voltage	Voltage range	Air flow	Speed / rpm	Input power	Current draw	Sound power level	Perm. amb. temp.	Technical features and electrical connections
Type	Motor		VDC	VDC	m³/h	rpm	W	A	dB(A)	°C	
K3G 200-BD46-04	M3G 074-CF	①	24	16...28	725	4120	170	7,0	80	-25...+60	p. 258 / J5)
K3G 200-BD44-02	M3G 074-CF	②	24	16...28	805	4830	275	11,5	84	-25...+60	p. 258 / J5)
K3G 200-BD64-04	M3G 074-CF	③	48	36...57	900	4890	280	5,9	85	-25...+60	p. 258 / J5)
K3G 200-BDA8-02	M3G 074-CF	④	48	36...57	905	5470	400	8,4	88	-25...+60	p. 258 / J5)

Subject to alternations

		n rpm	P_{ed} W	I A	Lw_A dB(A)
①	❶	4120	170	7,0*	80
①	❷	4025	180	7,52*	77
①	❸	4005	187	7,80*	76
①	❹	4045	187	7,78*	78
②	❶	4830	275	11,5*	84
②	❷	4720	294	12,24*	81
②	❸	4685	299	12,48*	80
②	❹	4715	295	12,30*	83
③	❶	4890	280	5,9*	85
③	❷	4795	300	6,27*	81
③	❸	4755	307	6,41*	80
③	❹	4780	304	6,35*	82
④	❶	5470	400	8,4*	88
④	❷	5365	426	8,89*	85
④	❸	5310	438	9,17*	83
④	❹	5355	431	9,01*	87

Air performance measured as per: ISO 5801, Installation category A, without protection against accidental contact.

Suction-side noise levels: LWA as per ISO 13347, LpA measured at 1 m distance to fan axis.

The acoustic values given are only valid under the measurment conditions listed and may vary depending on the installation situation.

With any deviation to the standard setup, the specific values have to be checked and reviewed once installed or fitted! For detailed information see http://www.ebmpapst.com/general conditions

* current measured at nominal voltage

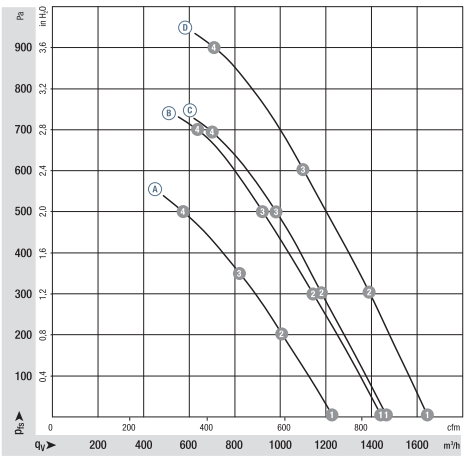

Cable assignment:

Red = UN
Yellow = 0-10 VDC
White = Speed monitoring output
Blue = GND

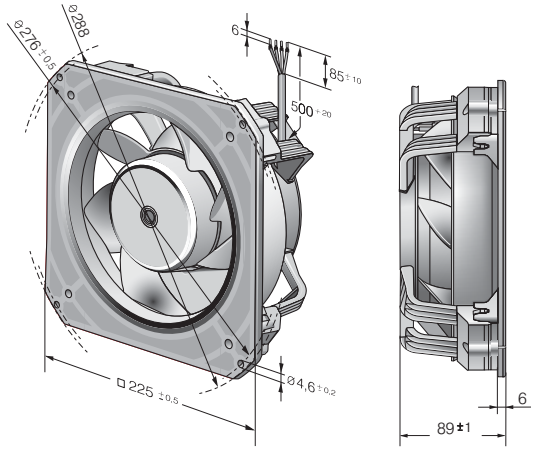

max. 2070 m³/h

DC axial fans

Ø 250 mm

- **Material:** Wall ring: Die-cast aluminium
  Blades: Plastic (PP)
  Rotor: Thick layer passivated
- **Number of blades:** 7
- **Direction of air flow:** "V"
- **Direction of rotation:** Counter-clockwise, seen on rotor
- **Insulation class:** "B"
- **Mounting position:** Any
- **Condensate discharges:** On rotor side
- **Operation mode:** Continuous operation (S1)
- **Bearings:** Maintenance-free ball bearings

Nominal data		Curve	Nominal voltage	Voltage range	Air flow	Speed / rpm	Input power	Current draw	Max. back-pressure	Perm. amb. temp.	Technical features and electrical connections
Type	**Motor**		**VDC**	**VDC**	**m³/h**	**rpm**	**W**	**A**	**Pa**	**°C**	
W1G250-HJ87 -02	M1G 074-BF	A	24	16-28	2070	3090	120	6,80	150	-25...+60	p. 254 / E)
W1G250-HJ63 -02	M1G 074-BF	B	48	36-57	2070	3090	120	3,40	150	-25...+60	p. 254 / E)

Subject to alternations

Curve:

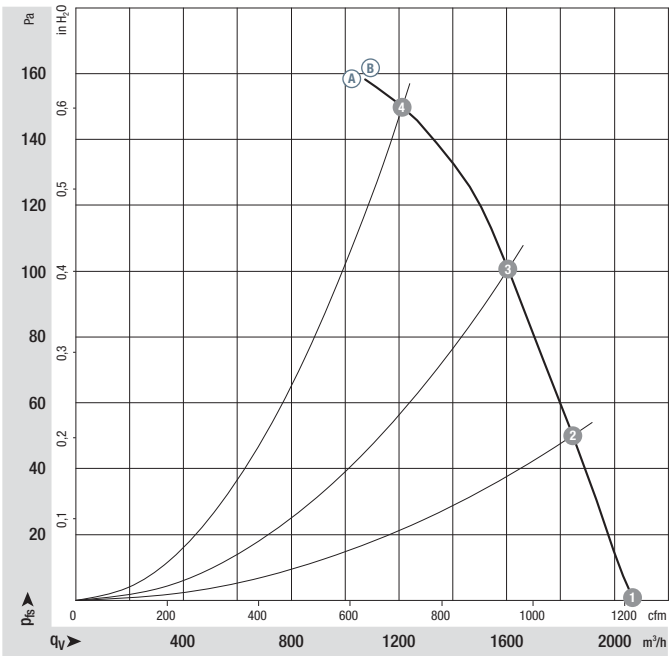

		n rpm	P_{ed} W	I A	L_WA dB(A)
A	1	3090	120	6,80	74
A	2	2950	124	7,10	73
A	3	2820	127	7,43	73
A	4	2730	130	7,80	78
B	1	3090	120	3,40	74
B	2	2950	124	3,55	73
B	3	2820	127	3,74	73
B	4	2730	130	3,90	78

Air performance measured as per: ISO 5801, Installation category A, without protection against accidental contact. Suction-side noise levels: LWA as per ISO 13347, LpA measured at 1 m distance to fan axis. The acoustic values given are only valid under the measurment conditions listed and may vary depending on the installation situation. With any deviation to the standard setup, the specific values have to be checked and reviewed once installed or fitted!
For detailed information see http://www.ebmpapst.com/general conditions

ebmpapst

- **Technical features:** See electrical connections p. 254
- **EMC:** Interference emission acc. to EN 55022 (Class B)
  Interference immunity acc. to EN 61000-6-2 (industrial environment)
- **Electrical connection:** Via terminal strip
- **Protection class:** I
- **Product conforming to standards:** EN 60950-1

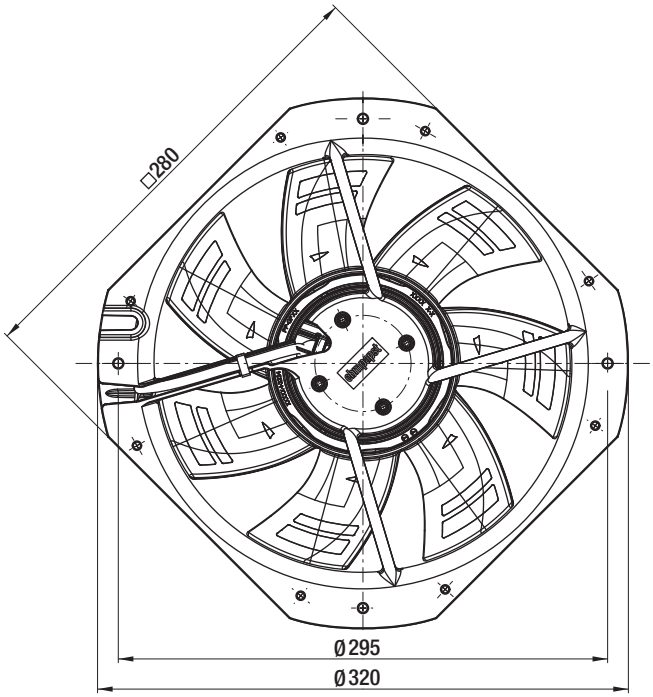

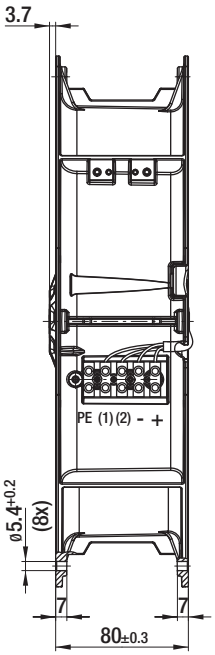

(1) Control input "V"
(2) Speed output