EC centrifugal fan and blowers

single inlet, Ø 108

- **Material:** Housing: Die-cast aluminium
  Impeller: Hot-dip galvanised sheet steel
  Rotor: Galvanised
  Electronics enclosure: Die-cast aluminium
- **Direction of rotation:** Clockwise, seen on rotor
- **Type of protection:** IP 44
- **Insulation class:** "B"
- **Mounting position:** Any
- **Condensate discharges:** None
- **Mode of operation:** Continuous operation (S1)
- **Bearings:** Maintenance-free ball bearings

Nominal data		Curve	Nominal voltage	Frequency	Speed/rpm	Max. power input (1)	Max. current draw (1)	Min. back pressure	Perm. amb. temp.	Electr. connection
Type	**Motor**		**VAC**	**Hz**	**rpm**	**W**	**A**	**Pa**	**°C**	p. 601
***3G 108**	M3G 055-BD	Ⓐ	1~ 115	50/60	2960	60	0.90	0	-25 to +60	H1)

subject to alterations

(1) Nominal data in operating point with maximum load and 115 VAC

Curves

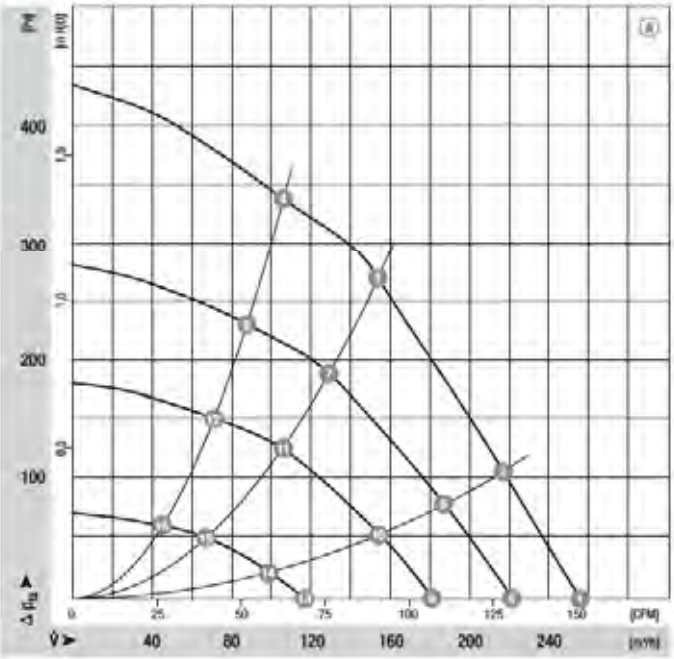

		n [rpm]	P_1 [W]	I [A]	Lp_A [dB(A)]	η_{tt} [%]
Ⓐ	1	2960	60	0.90	64	—
Ⓐ	2	3100	53	0.80	62	42
Ⓐ	3	3370	42	0.60	60	44
Ⓐ	4	3560	34	0.50	59	32
Ⓐ	5	2570	38	0.55	61	—
Ⓐ	6	2660	34	0.50	60	42
Ⓐ	7	2820	25	0.40	57	44
Ⓐ	8	2920	19	0.30	55	32
Ⓐ	9	2150	23	0.35	56	—
Ⓐ	10	2200	20	0.30	55	42
Ⓐ	11	2320	16	0.25	52	44
Ⓐ	12	2390	12	0.20	50	32
Ⓐ	13	1400	9	0.20	46	—
Ⓐ	14	1425	8	0.20	44	42
Ⓐ	15	1490	7	0.20	40	44
Ⓐ	16	1530	6	0.20	40	32

ebmpapst

- **Technical features:**
  - Control input 0-10 VDC / PWM
  - Output 10 VDC max. 1.1 mA
  - Tach output
  - Locked-rotor protection
- **EMC:** Interference emission acc. to EN 61000-6-3
  Interference immunity acc. to EN 61000-6-1
  Harmonics acc. to DIN EN 61000-3-2/3
- **Leakage current:** < 3.5 mA acc. to EN 60950-1
- **Cable exit:** Variable
- **Protection class:** I
- **Product conforming to standards:** EN 60335-1, CE
- **Approvals:** GOST; VDE, UL, CSA, CCC are applied for

Centrifugal fan	Mass of centrifugal fan kg	Centrifugal blower with flange	Mass of centrifugal blower kg
R3G 108-AB15 -02	1.0	G3G 108-BB15 -02	1.7

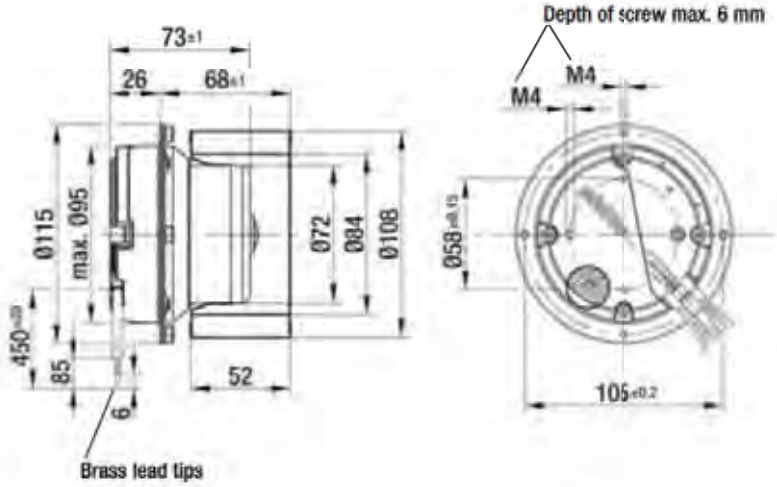

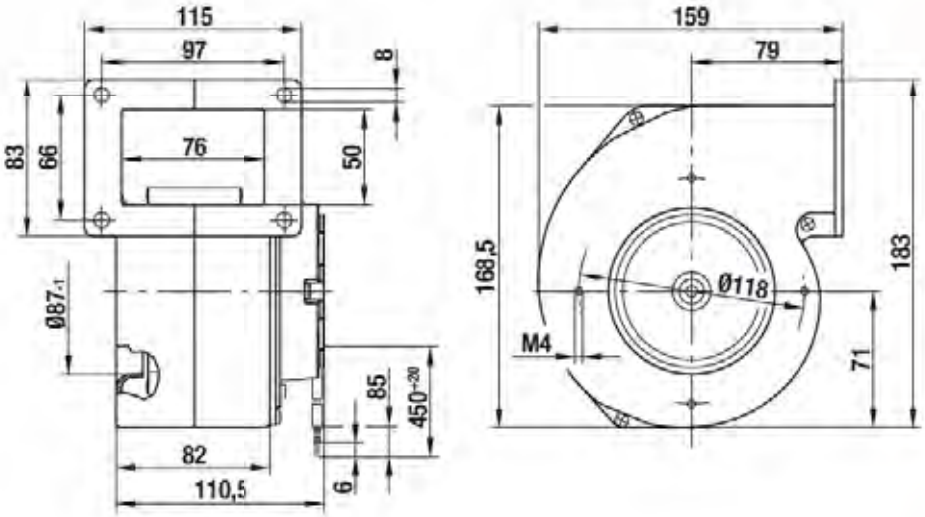

EC centrifugal fan and blowers

single inlet, Ø 108

- **Material:** Housing: Die-cast aluminium
  Impeller: Hot-dip galvanised sheet steel
  Rotor: Galvanised
  Electronics enclosure: Die-cast aluminium
- **Direction of rotation:** Clockwise, seen on rotor
- **Type of protection:** IP 44
- **Insulation class:** "B"
- **Mounting position:** Any
- **Condensate discharges:** None
- **Mode of operation:** Continuous operation (S1)
- **Bearings:** Maintenance-free ball bearings

Nominal data		Curve	Nominal voltage	Frequency	Speed/rpm	Max. power input (1)	Max. current draw (1)	Min. back pressure	Perm. amb. temp.	Electr. connection
Type	**Motor**		**VAC**	**Hz**	**rpm**	**W**	**A**	**Pa**	**°C**	p. 601
***3G 108**	M3G 055-BD	Ⓐ	1~ 230	50/60	2800	50	0.38	0	-25 to +60	H1)

subject to alterations

(1) Nominal data in operating point with maximum load and 230 VAC

Curves

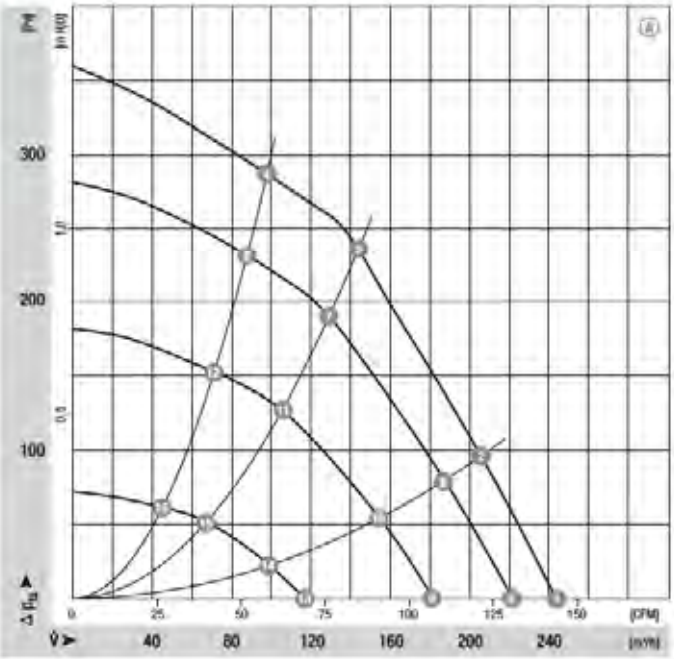

		n [rpm]	P_1 [W]	I [A]	Lp_A [dB(A)]	η_{tt} [%]
Ⓐ	❶	2800	50	0.38	64	—
Ⓐ	❷	2950	44	0.35	62	42
Ⓐ	❸	3120	33	0.25	60	44
Ⓐ	❹	3260	25	0.20	59	32
Ⓐ	❺	2570	38	0.30	61	—
Ⓐ	❻	2660	34	0.25	60	42
Ⓐ	❼	2820	25	0.20	57	44
Ⓐ	❽	2920	19	0.15	55	32
Ⓐ	❾	2150	23	0.20	56	—
Ⓐ	❿	2200	20	0.15	55	42
Ⓐ	⓫	2320	16	0.15	52	44
Ⓐ	⓬	2390	12	0.10	50	32
Ⓐ	⓭	1400	9	0.10	46	—
Ⓐ	⓮	1425	8	0.10	44	42
Ⓐ	⓯	1490	7	0.10	40	44
Ⓐ	⓰	1530	6	0.10	40	32

- **Technical features:**
  - Control input 0-10 VDC / PWM
  - Output 10 VDC max. 1.1 mA
  - Tach output
  - Locked-rotor protection
- **EMC:** Interference emission acc. to EN 61000-6-3
  Interference immunity acc. to EN 61000-6-1
  Harmonics acc. to DIN EN 61000-3-2/3
- **Leakage current:** < 3.5 mA acc. to EN 60950-1
- **Cable exit:** Variable
- **Protection class:** I
- **Product conforming to standards:** EN 60335-1, CE
- **Approvals:** GOST; VDE, UL, CSA, CCC are applied for

Centrifugal fan	Mass of centrifugal fan kg	Centrifugal blower with flange	Mass of centrifugal blower kg
R3G 108-AB01 -02	1.0	G3G 108-BB01 -02	1.7

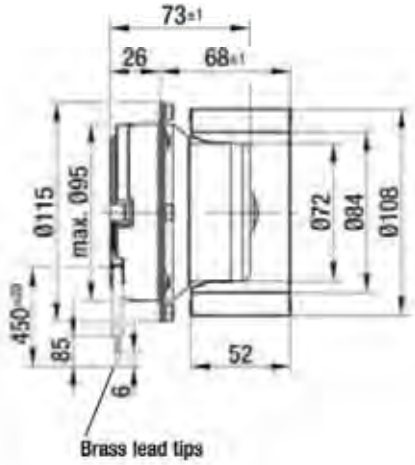

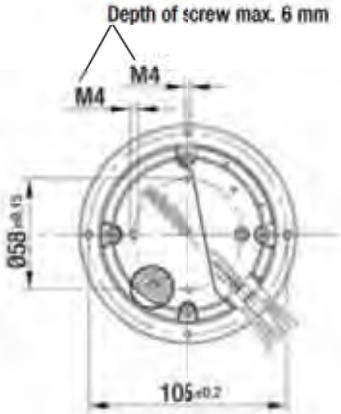

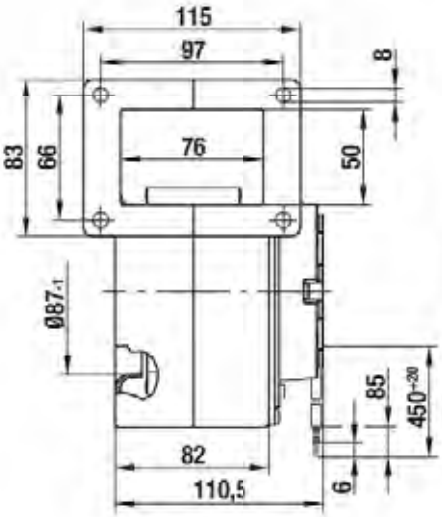

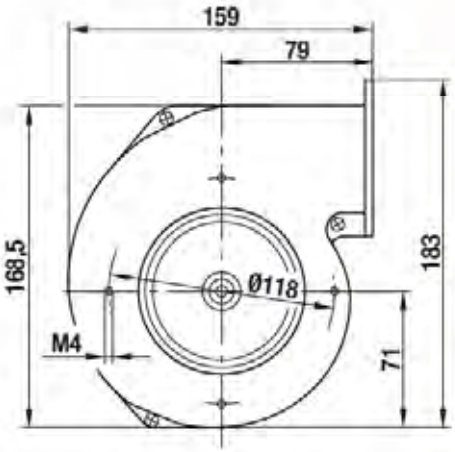

EC centrifugal fan and blowers

single inlet, Ø 120

- **Material:** Housing: Die-cast aluminium
  Impeller: Hot-dip galvanised sheet steel
  Rotor: Galvanised
  Electronics enclosure: Die-cast aluminium
- **Direction of rotation:** Clockwise, seen on rotor
- **Type of protection:** IP 44
- **Insulation class:** "B"
- **Mounting position:** Any
- **Condensate discharges:** None
- **Mode of operation:** Continuous operation (S1)
- **Bearings:** Maintenance-free ball bearings

Nominal data		Curve	Nominal voltage	Frequency	Speed/rpm	Max. power input (1)	Max. current draw (1)	Min. back pressure	Perm. amb. temp.	Electr. connection
Type	**Motor**		**VAC**	**Hz**	**rpm**	**W**	**A**	**Pa**	**°C**	p. 601
***3G 120**	M3G 055-BD	Ⓐ	1~ 115	50/60	2320	46	0.70	0	-25 to +60	H1)

subject to alterations

(1) Nominal data in operating point with maximum load and 115 VAC

Curves

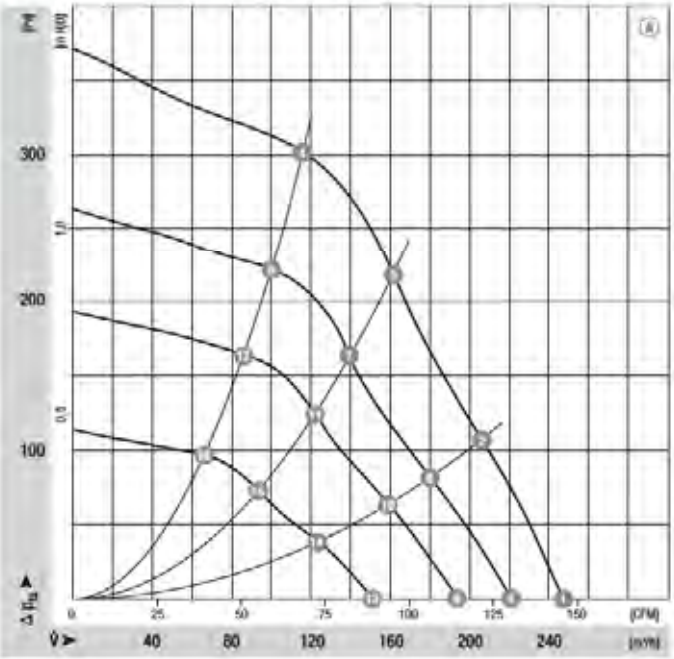

	n [rpm]	P_1 [W]	I [A]	Lp_A [dB(A)]	η_{tt} [%]
Ⓐ ❶	2320	46	0.70	61	—
Ⓐ ❷	2490	40	0.60	59	52
Ⓐ ❸	2640	33	0.50	58	58
Ⓐ ❹	2880	24	0.40	57	51
Ⓐ ❺	2060	34	0.50	59	—
Ⓐ ❻	2190	29	0.45	57	50
Ⓐ ❼	2295	24	0.40	55	54
Ⓐ ❽	2445	18	0.30	54	52
Ⓐ ❾	1830	24	0.40	54	—
Ⓐ ❿	1920	20	0.30	52	50
Ⓐ ⓫	2010	17	0.30	51	54
Ⓐ ⓬	2115	13	0.20	51	52
Ⓐ ⓭	1430	13	0.20	48	—
Ⓐ ⓮	1500	12	0.20	45	50
Ⓐ ⓯	1580	10	0.20	44	54
Ⓐ ⓰	1640	8	0.20	44	52

ebmpapst

- **Technical features:**
  - Control input 0-10 VDC / PWM
  - Output 10 VDC max. 1.1 mA
  - Tach output
  - Locked-rotor protection
- **EMC:** Interference emission acc. to EN 61000-6-3
  Interference immunity acc. to EN 61000-6-1
  Harmonics acc. to DIN EN 61000-3-2/3
- **Leakage current:** < 3.5 mA acc. to EN 60950-1
- **Cable exit:** Variable
- **Protection class:** I
- **Product conforming to standards:** EN 60335-1, CE
- **Approvals:** GOST; VDE, UL, CSA, CCC are applied for

Centrifugal fan	Mass of centrifugal fan kg	Centrifugal blower with flange	Mass of centrifugal blower kg
R3G 120-AB13 -02	1.1	G3G 120-BB13 -02	1.8

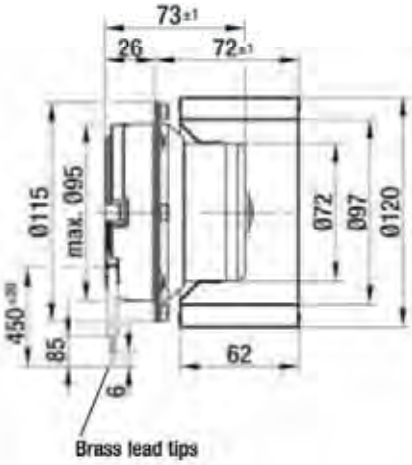

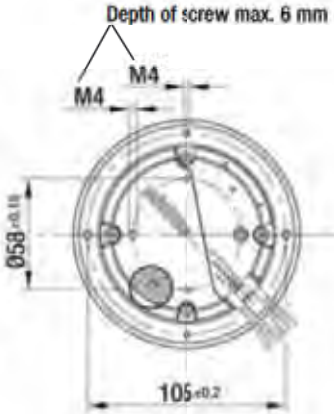

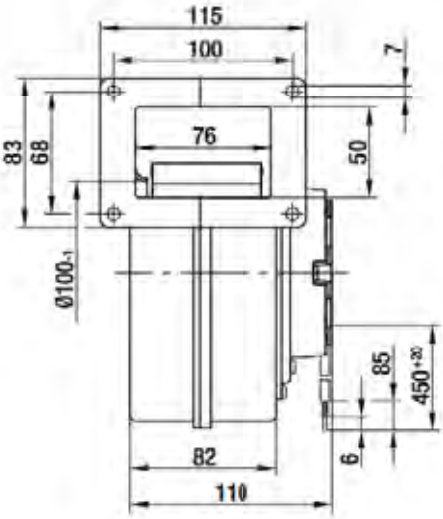

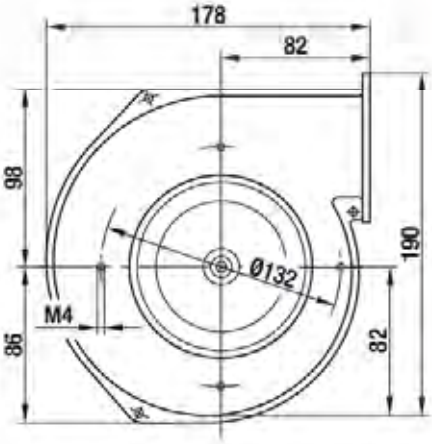

EC centrifugal fan and blowers

single inlet, Ø 120

- **Material:** Housing: Die-cast aluminium
  Impeller: Hot-dip galvanised sheet steel
  Rotor: Galvanised
  Electronics enclosure: Die-cast aluminium
- **Direction of rotation:** Clockwise, seen on rotor
- **Type of protection:** IP 44
- **Insulation class:** "B"
- **Mounting position:** Any
- **Condensate discharges:** None
- **Mode of operation:** Continuous operation (S1)
- **Bearings:** Maintenance-free ball bearings

Nominal data		Curve	Nominal voltage	Frequency	Speed/rpm	Max. power input (1)	Max. current draw (1)	Min. back pressure	Perm. amb. temp.	Electr. connection
Type	**Motor**		**VAC**	**Hz**	**rpm**	**W**	**A**	**Pa**	**°C**	p. 601
***3G 120**	M3G 055-BD	Ⓐ	1~ 230	50/60	2200	41	0.30	0	-25 to +60	H1)

subject to alterations

(1) Nominal data in operating point with maximum load and 230 VAC

Curves

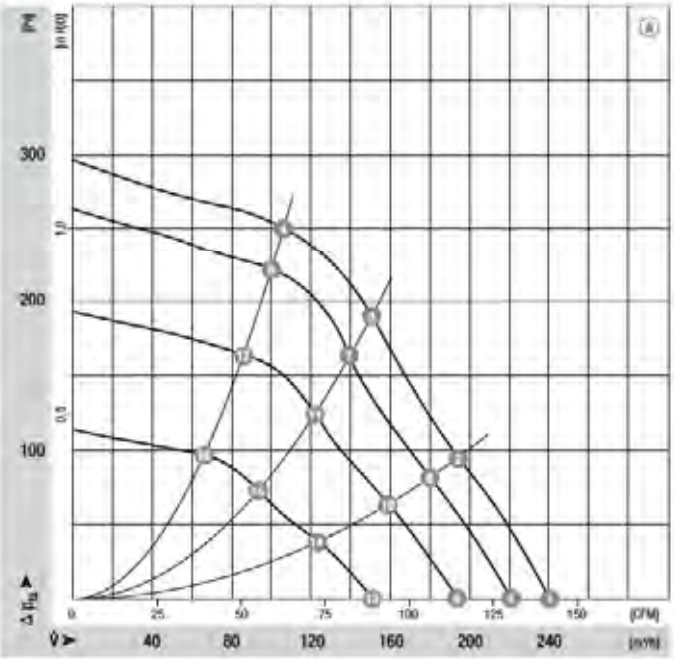

	n [rpm]	P_1 [W]	I [A]	Lp_A [dB(A)]	η_{tt} [%]
Ⓐ ❶	2200	41	0.30	62	—
Ⓐ ❷	2320	34	0.25	59	51
Ⓐ ❸	2440	28	0.20	57	55
Ⓐ ❹	2600	20	0.15	57	49
Ⓐ ❺	2060	34	0.25	59	—
Ⓐ ❻	2190	29	0.20	57	50
Ⓐ ❼	2295	24	0.20	55	54
Ⓐ ❽	2445	18	0.15	54	52
Ⓐ ❾	1830	24	0.20	54	—
Ⓐ ❿	1920	20	0.15	52	50
Ⓐ ⓫	2010	17	0.15	51	54
Ⓐ ⓬	2115	13	0.10	51	52
Ⓐ ⓭	1430	13	0.10	48	—
Ⓐ ⓮	1500	12	0.10	45	50
Ⓐ ⓯	1580	10	0.10	44	54
Ⓐ ⓰	1640	8	0.10	44	52

- **Technical features:**
  - Control input 0-10 VDC / PWM
  - Output 10 VDC max. 1.1 mA
  - Tach output
  - Locked-rotor protection
- **EMC:** Interference emission acc. to EN 61000-6-3
  Interference immunity acc. to EN 61000-6-1
  Harmonics acc. to DIN EN 61000-3-2/3
- **Leakage current:** < 3.5 mA acc. to EN 60950-1
- **Cable exit:** Variable
- **Protection class:** I
- **Product conforming to standards:** EN 60335-1, CE
- **Approvals:** GOST; VDE, UL, CSA, CCC are applied for

Centrifugal fan	Mass of centrifugal fan kg	Centrifugal blower with flange	Mass of centrifugal blower kg
R3G 120-AB03 -02	1.1	G3G 120-BB03 -02	1.8

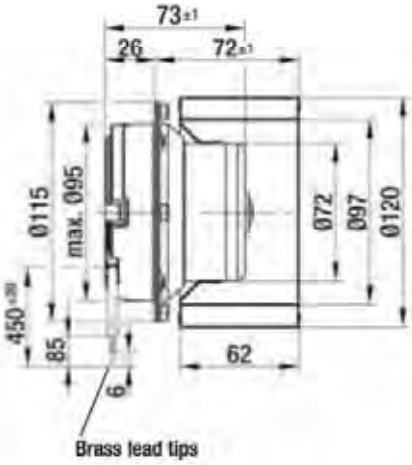

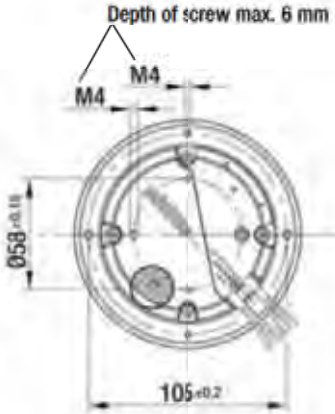

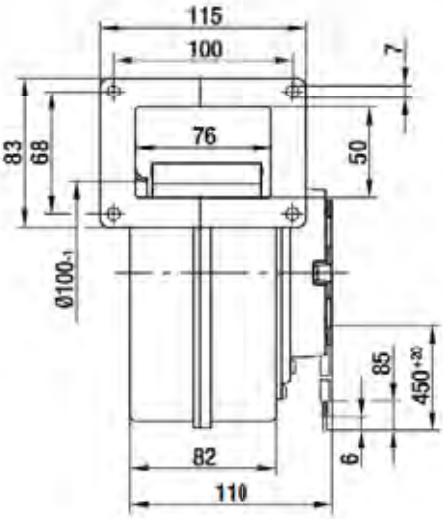

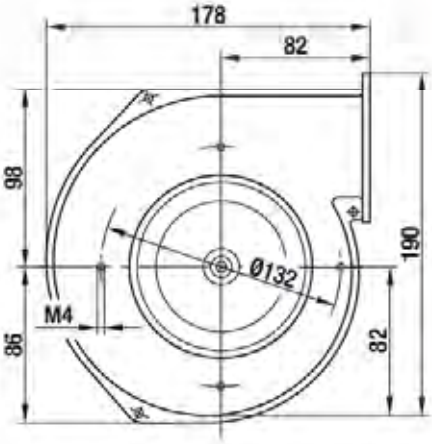

EC centrifugal fan and blowers

single inlet, Ø 133

- **Material:** Housing: Hot-dip galvanised sheet steel
  Impeller: Hot-dip galvanised sheet steel
  Rotor: Galvanised
  Electronics enclosure: Die-cast aluminium
- **Direction of rotation:** Clockwise, seen on rotor
- **Type of protection:** IP 44
- **Insulation class:** "B"
- **Mounting position:** Any
- **Condensate discharges:** None
- **Mode of operation:** Continuous operation (S1)
- **Bearings:** Maintenance-free ball bearings

Nominal data		Curve	Nominal voltage	Frequency	Speed/rpm	Max. power input (1)	Max. current draw (1)	Min. back pressure	Perm. amb. temp.	Electr. connection
Type	**Motor**		**VAC**	**Hz**	**rpm**	**W**	**A**	**Pa**	**°C**	p. 601
***3G 133**	M3G 055-BD	Ⓐ	1~ 115	50/60	2000	42	0.60	0	-25 to +60	H1)

subject to alterations

(1) Nominal data in operating point with maximum load and 115 VAC

Curves

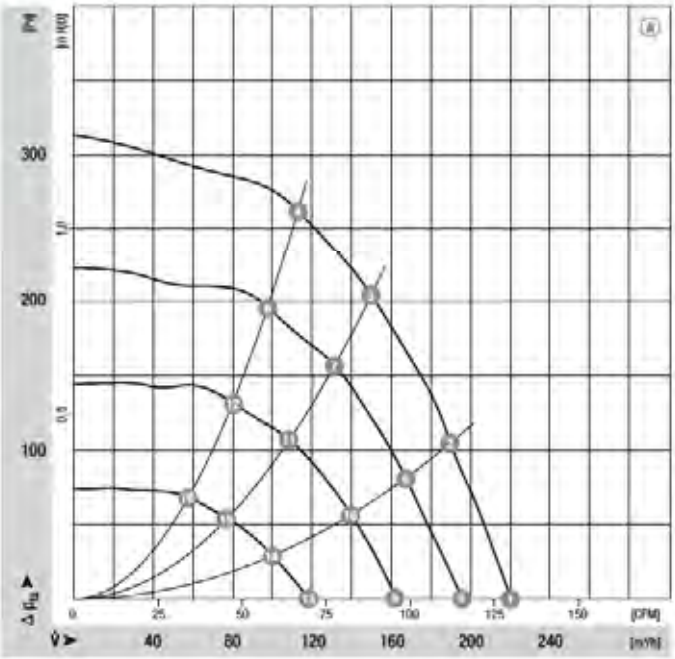

	n [rpm]	P_1 [W]	I [A]	Lp_A [dB(A)]	η_{tt} [%]
Ⓐ ❶	2000	42	0.60	64	—
Ⓐ ❷	2140	37	0.55	62	42
Ⓐ ❸	2310	30	0.45	60	52
Ⓐ ❹	2460	23	0.35	58	51
Ⓐ ❺	1780	30	0.45	60	—
Ⓐ ❻	1870	26	0.40	59	45
Ⓐ ❼	1995	21	0.30	56	53
Ⓐ ❽	2120	17	0.25	56	51
Ⓐ ❾	1495	18	0.30	55	—
Ⓐ ❿	1570	16	0.25	54	45
Ⓐ ⓫	1640	13	0.20	51	53
Ⓐ ⓬	1730	10	0.20	50	51
Ⓐ ⓭	1100	9	0.20	49	—
Ⓐ ⓮	1140	8	0.20	47	45
Ⓐ ⓯	1200	7	0.20	44	53
Ⓐ ⓰	1250	6	0.20	41	51

ebmpapst

- **Technical features:**
  - Control input 0-10 VDC / PWM
  - Output 10 VDC max. 1.1 mA
  - Tach output
  - Locked-rotor protection
- **EMC:** Interference emission acc. to EN 61000-6-3
  Interference immunity acc. to EN 61000-6-1
  Harmonics acc. to DIN EN 61000-3-2/3
- **Leakage current:** < 3.5 mA acc. to EN 60950-1
- **Cable exit:** Variable
- **Protection class:** I
- **Product conforming to standards:** EN 60335-1, CE
- **Approvals:** GOST; VDE, UL, CSA, CCC are applied for

Centrifugal fan	Mass of centrifugal fan kg	Centrifugal blower without flange	Mass of centrifugal blower kg
R3G 133-AD11 -02	1.0	G3G 133-DD11 -02	1.5

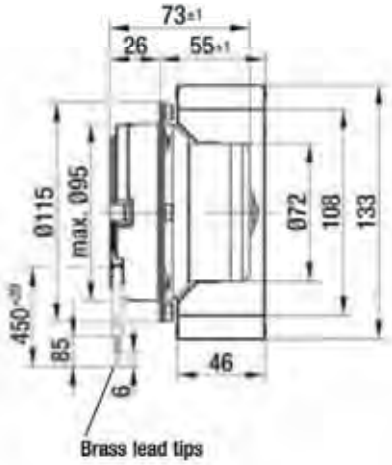

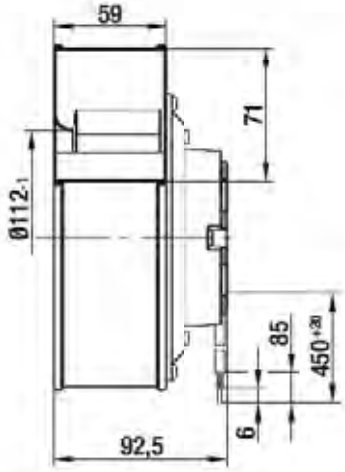

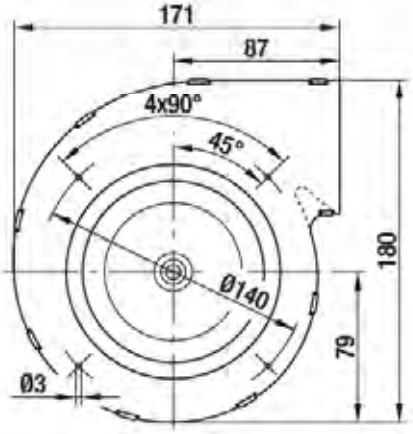

EC centrifugal fan and blowers

single inlet, Ø 133

- **Material:** Housing: Hot-dip galvanised sheet steel
  Impeller: Hot-dip galvanised sheet steel
  Rotor: Galvanised
  Electronics enclosure: Die-cast aluminium
- **Direction of rotation:** Clockwise, seen on rotor
- **Type of protection:** IP 44
- **Insulation class:** "B"
- **Mounting position:** Any
- **Condensate discharges:** None
- **Mode of operation:** Continuous operation (S1)
- **Bearings:** Maintenance-free ball bearings

Nominal data		Curve	Nominal voltage	Frequency	Speed/rpm	Max. power input (1)	Max. current draw (1)	Min. back pressure	Perm. amb. temp.	Electr. connection
Type	**Motor**		**VAC**	**Hz**	**rpm**	**W**	**A**	**Pa**	**°C**	p. 601
***3G 133**	M3G 055-BD	Ⓐ	1~ 230	50/60	1925	38	0.30	0	-25 to +60	H1)

subject to alterations

(1) Nominal data in operating point with maximum load and 230 VAC

Curves

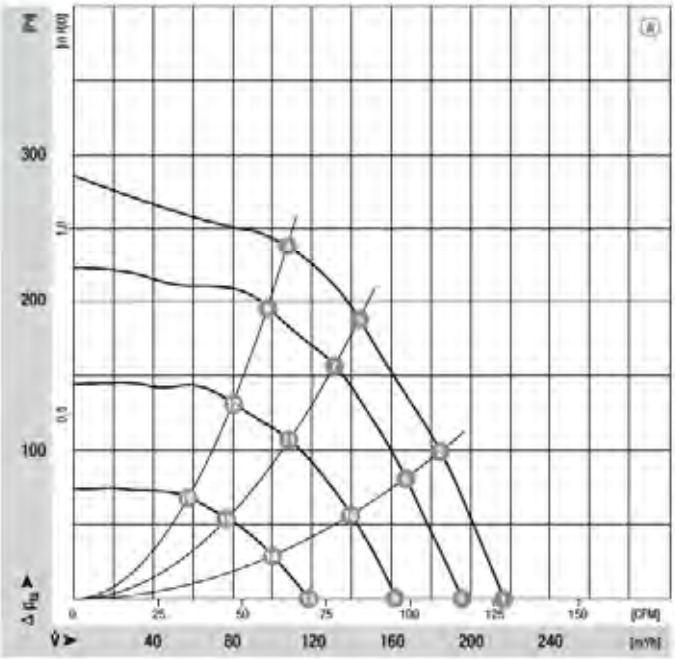

	n [rpm]	P_1 [W]	I [A]	Lp_A [dB(A)]	η_{fl} [%]
Ⓐ ❶	1925	38	0.30	63	—
Ⓐ ❷	2070	34	0.25	62	45
Ⓐ ❸	2210	27	0.20	60	53
Ⓐ ❹	2330	21	0.15	59	51
Ⓐ ❺	1780	30	0.25	60	—
Ⓐ ❻	1870	26	0.20	59	45
Ⓐ ❼	1995	21	0.15	56	53
Ⓐ ❽	2120	17	0.15	56	51
Ⓐ ❾	1495	18	0.15	55	—
Ⓐ ❿	1570	16	0.15	54	45
Ⓐ ⓫	1640	13	0.10	51	53
Ⓐ ⓬	1730	10	0.10	50	51
Ⓐ ⓭	1100	9	0.10	49	—
Ⓐ ⓮	1140	8	0.10	47	45
Ⓐ ⓯	1200	7	0.10	44	53
Ⓐ ⓰	1250	6	0.10	41	51

ebmpapst

- **Technical features:**
  - Control input 0-10 VDC / PWM
  - Output 10 VDC max. 1.1 mA
  - Tach output
  - Locked-rotor protection
- **EMC:** Interference emission acc. to EN 61000-6-3
  Interference immunity acc. to EN 61000-6-1
  Harmonics acc. to DIN EN 61000-3-2/3
- **Leakage current:** < 3.5 mA acc. to EN 60950-1
- **Cable exit:** Variable
- **Protection class:** I
- **Product conforming to standards:** EN 60335-1, CE
- **Approvals:** GOST; VDE, UL, CSA, CCC are applied for

Centrifugal fan	Mass of centrifugal fan kg	Centrifugal blower without flange	Mass of centrifugal blower kg
R3G 133-AD05 -02	1.0	G3G 133-DD05 -02	1.5

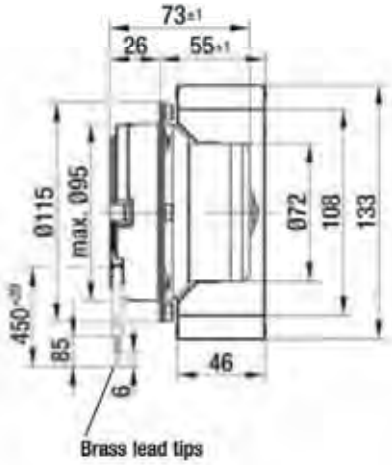

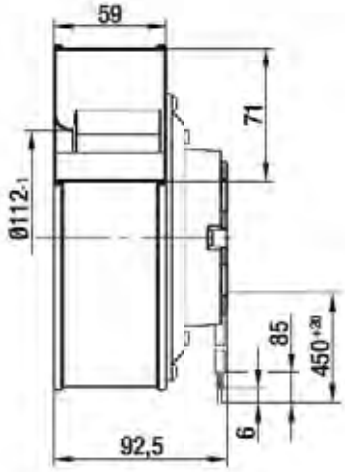

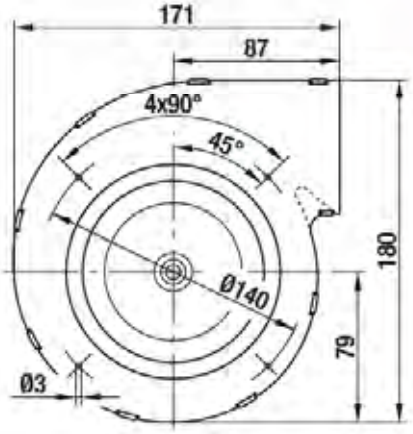

EC centrifugal fan and blowers

single inlet, Ø 140

- **Material:** Housing: Die-cast aluminium
  Impeller: Hot-dip galvanised sheet steel
  Rotor: Galvanised
  Electronics enclosure: Die-cast aluminium
- **Direction of rotation:** Clockwise, seen on rotor
- **Type of protection:** IP 44
- **Insulation class:** "B"
- **Mounting position:** Any
- **Condensate discharges:** None
- **Mode of operation:** Continuous operation (S1)
- **Bearings:** Maintenance-free ball bearings

Nominal data		Curve	Nominal voltage	Frequency	Speed/rpm	Max. power input (1)	Max. current draw (1)	Min. back pressure	Perm. amb. temp.	Electr. connection
Type	**Motor**		**VAC**	**Hz**	**rpm**	**W**	**A**	**Pa**	**°C**	p. 601
***3G 140**	M3G 055-CF	Ⓐ	1~ 115	50/60	1790	70	1.00	0	-25 to +60	H1)

subject to alterations

(1) Nominal data in operating point with maximum load and 115 VAC

Curves

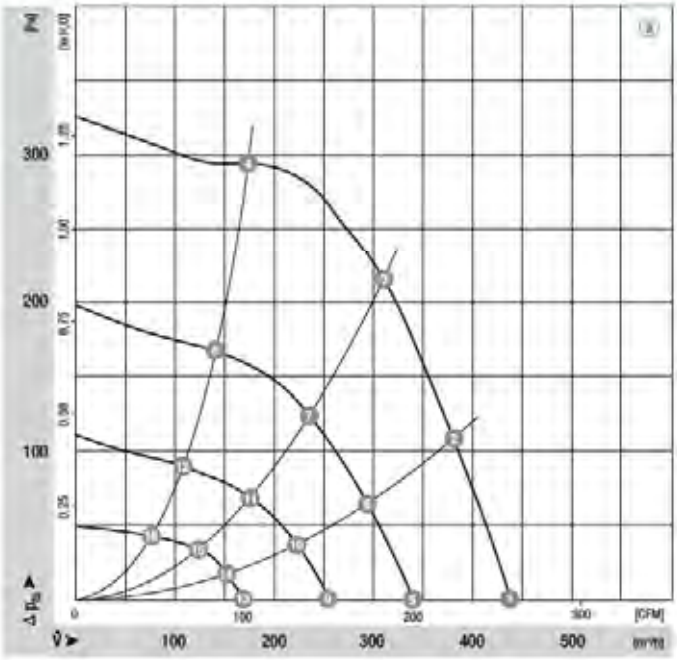

	n [rpm]	P_1 [W]	I [A]	Lp_A [dB(A)]	η_{tt} [%]
Ⓐ ❶	1790	70	1.00	63	—
Ⓐ ❷	1900	63	1.00	61	46
Ⓐ ❸	2040	53	0.80	60	61
Ⓐ ❹	2250	36	0.50	58	55
Ⓐ ❺	1410	33	0.60	58	—
Ⓐ ❻	1500	30	0.55	56	46
Ⓐ ❼	1600	25	0.45	54	56
Ⓐ ❽	1790	18	0.30	53	48
Ⓐ ❾	1060	14	0.35	51	—
Ⓐ ❿	1105	13	0.30	50	46
Ⓐ ⓫	1210	11	0.25	47	56
Ⓐ ⓬	1355	8	0.20	47	48
Ⓐ ⓭	705	4	0.20	40	—
Ⓐ ⓮	750	4	0.20	39	46
Ⓐ ⓯	800	3	0.20	38	56
Ⓐ ⓰	895	3	0.20	37	48

ebmpapst

- **Technical features:**
  - Control input 0-10 VDC / PWM
  - Output 10 VDC max. 1.1 mA
  - Tach output
  - Locked-rotor protection
- **EMC:** Interference emission acc. to EN 61000-6-3
  Interference immunity acc. to EN 61000-6-1
  Harmonics acc. to DIN EN 61000-3-2/3
- **Leakage current:** < 3.5 mA acc. to EN 60950-1
- **Cable exit:** Variable
- **Protection class:** I
- **Product conforming to standards:** EN 60335-1, CE
- **Approvals:** GOST; VDE, UL, CSA, CCC are applied for

Centrifugal fan	Mass of centrifugal fan kg	Centrifugal blower with flange	Mass of centrifugal blower kg
R3G 140-AV19 -02	1.3	G3G 140-AV19 -02	2.6

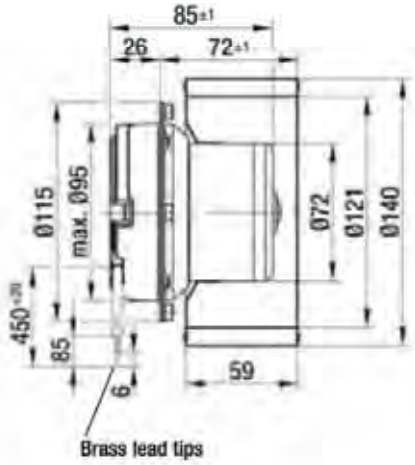

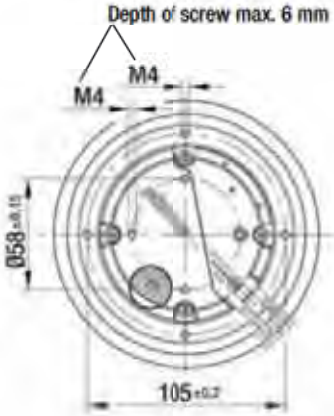

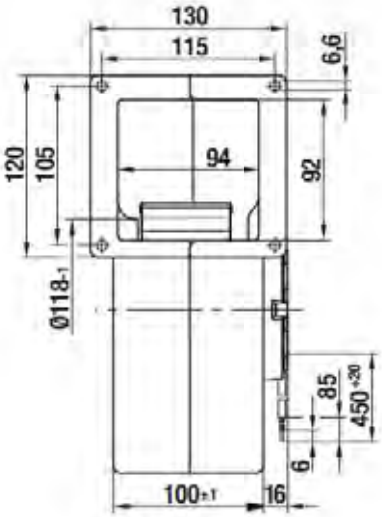

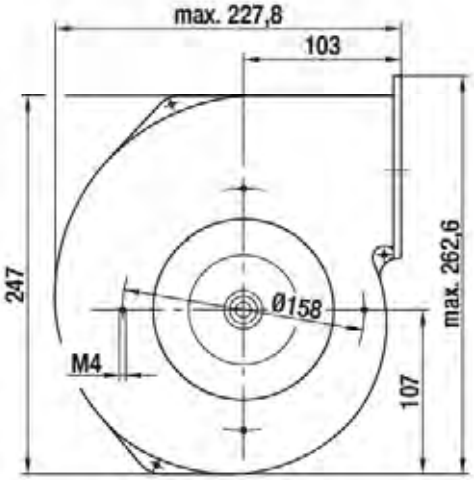

EC centrifugal fan and blowers

single inlet, Ø 140

- **Material:** Housing: Die-cast aluminium
  Impeller: Hot-dip galvanised sheet steel
  Rotor: Galvanised
  Electronics enclosure: Die-cast aluminium
- **Direction of rotation:** Clockwise, seen on rotor
- **Type of protection:** IP 44
- **Insulation class:** "B"
- **Mounting position:** Any
- **Condensate discharges:** None
- **Mode of operation:** Continuous operation (S1)
- **Bearings:** Maintenance-free ball bearings

Nominal data		Curve	Nominal voltage	Frequency	Speed/rpm	Max. power input (1)	Max. current draw (1)	Min. back pressure	Perm. amb. temp.	Electr. connection
Type	**Motor**		**VAC**	**Hz**	**rpm**	**W**	**A**	**Pa**	**°C**	p. 601
***3G 140**	M3G 055-CF	Ⓐ	1~ 230	50/60	1800	66	0.50	0	-25 to +60	H1)

subject to alterations

(1) Nominal data in operating point with maximum load and 230 VAC

Curves

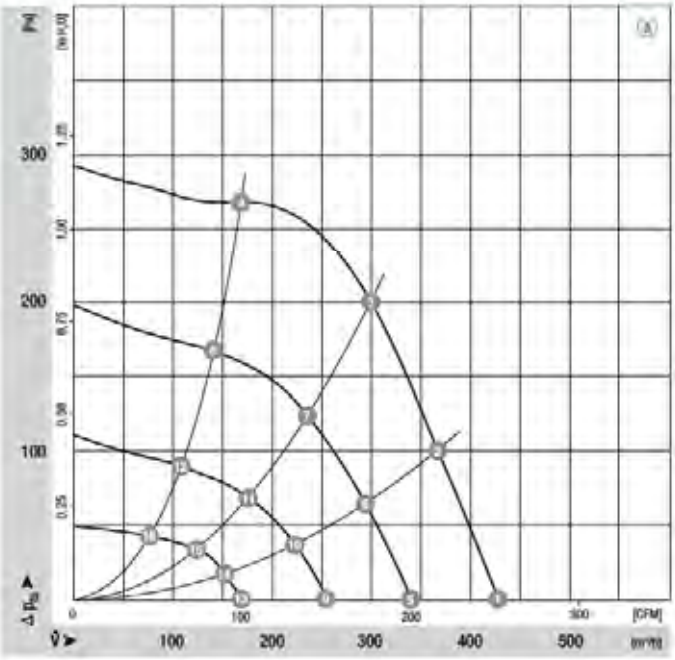

		n [rpm]	P_1 [W]	I [A]	Lp_A [dB(A)]	η_{tt} [%]
Ⓐ	❶	1800	66	0.50	63	—
Ⓐ	❷	1860	58	0.40	62	46
Ⓐ	❸	1970	49	0.35	60	56
Ⓐ	❹	2170	33	0.25	58	48
Ⓐ	❺	1410	33	0.30	58	—
Ⓐ	❻	1500	30	0.25	56	46
Ⓐ	❼	1600	25	0.25	54	56
Ⓐ	❽	1790	18	0.15	53	48
Ⓐ	❾	1060	14	0.15	51	—
Ⓐ	❿	1105	13	0.15	50	46
Ⓐ	⓫	1210	11	0.15	47	56
Ⓐ	⓬	1355	8	0.10	47	48
Ⓐ	⓭	705	4	0.10	40	—
Ⓐ	⓮	750	4	0.10	39	46
Ⓐ	⓯	800	3	0.10	38	56
Ⓐ	⓰	895	3	0.10	37	48

ebmpapst

- **Technical features:**
  - Control input 0-10 VDC / PWM
  - Output 10 VDC max. 1.1 mA
  - Tach output
  - Locked-rotor protection
- **EMC:** Interference emission acc. to EN 61000-6-3
  Interference immunity acc. to EN 61000-6-1
  Harmonics acc. to DIN EN 61000-3-2/3
- **Leakage current:** < 3.5 mA acc. to EN 60950-1
- **Cable exit:** Variable
- **Protection class:** I
- **Product conforming to standards:** EN 60335-1, CE
- **Approvals:** GOST; VDE, UL, CSA, CCC are applied for

Centrifugal fan	Mass of centrifugal fan kg	Centrifugal blower with flange	Mass of centrifugal blower kg
R3G 140-AV03 -02	1.3	G3G 140-AV03 -02	2.6

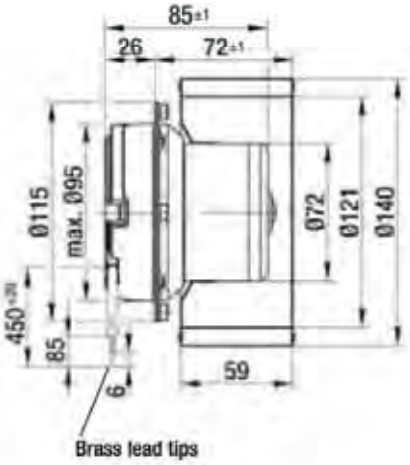

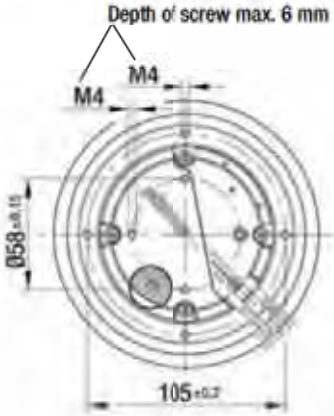

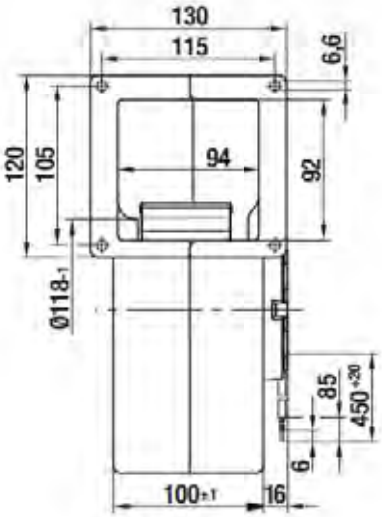

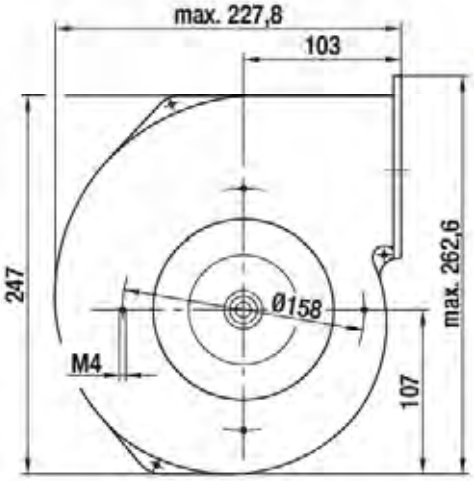

EC centrifugal fan and blowers

single inlet, constant air flow, Ø 140

- **Material:** Housing: Die-cast aluminium
  Impeller: PP plastic
  Rotor: Galvanised
  Electronics enclosure: Die-cast aluminium
- **Direction of rotation:** Clockwise, seen on rotor
- **Type of protection:** IP 44
- **Insulation class:** "B"
- **Mounting position:** Any
- **Condensate discharges:** None
- **Mode of operation:** Continuous operation (S1)
- **Bearings:** Maintenance-free ball bearings

Nominal data		Curve	Nominal voltage	Frequency	Speed/rpm	Max. power input (1)	Max. current draw (1)	Min. back pressure	Perm. amb. temp.	Electr. connection
Type	**Motor**		**VAC**	**Hz**	**rpm**	**W**	**A**	**Pa**	**°C**	p. 602
***3G 140**	M3G 055-CF	Ⓐ	1~ 115	50/60	1340	70	1.00	0	-25 to +60	H2)

subject to alterations

(1) Nominal data in operating point with maximum load and 115 VAC

Curves

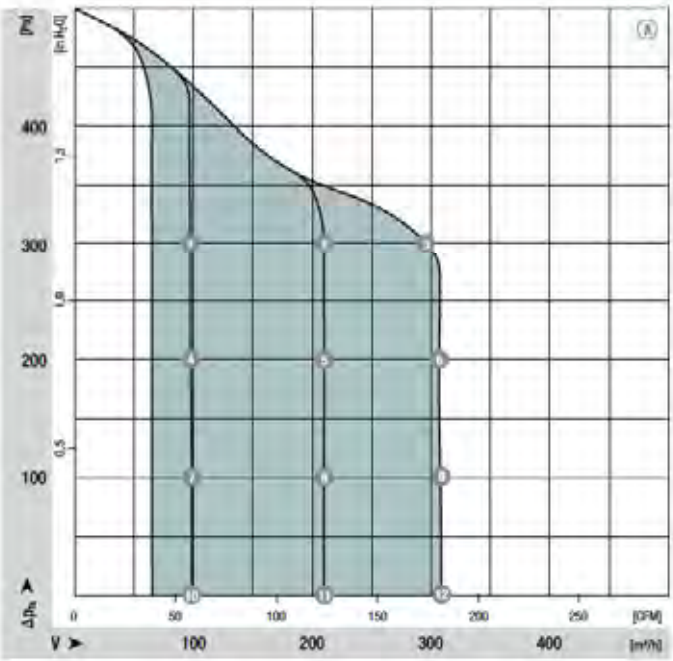

	n [rpm]	P_1 [W]	I [A]	Lp_A [dB(A)]	η_{tt} [%]
Ⓐ ❶	2390	29	0.40	59	37
Ⓐ ❷	2450	55	0.80	60	50
Ⓐ ❸	2460	67	1.00	60	57
Ⓐ ❹	1920	17	0.30	54	38
Ⓐ ❺	1960	30	0.70	55	54
Ⓐ ❻	2130	55	0.80	60	55
Ⓐ ❼	1300	9	0.20	46	36
Ⓐ ❽	1550	22	0.30	51	48
Ⓐ ❾	1760	40	0.60	58	48
Ⓐ ❿	440	3	0.10	33	—
Ⓐ ⓫	880	9	0.15	45	—
Ⓐ ⓬	1340	25	0.40	55	—

- **Technical features:**
  - Input for set value Lin 0-10 VDC / PWM (1.7 V ≙ 50 m³/h, 10 V ≙ 300 m³/h)
  - Output 10 VDC max. 1.1 mA
  - Tach output
  - Locked-rotor protection
- **EMC:** Interference emission acc. to EN 61000-6-3
  Interference immunity acc. to EN 61000-6-1
  Harmonics acc. to DIN EN 61000-3-2/3
- **Leakage current:** < 3.5 mA acc. to EN 60950-1
- **Cable exit:** Variable
- **Protection class:** I
- **Product conforming to standards:** EN 60335-1, CE
- **Approvals:** GOST; VDE, UL, CSA, CCC are applied for
- **Air intake:** Constant air flow curves can only be attained with unobstructed air intake (s. p. 586)

Centrifugal fan	Mass of centrifugal fan kg	Centrifugal blower with flange	Mass of centrifugal blower kg
R3G 140-AW21-12	1.3	G3G 140-AW21-12	2.6

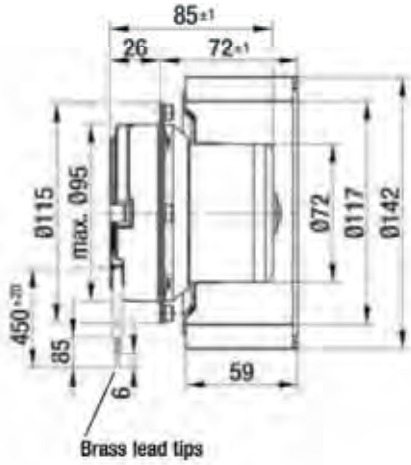

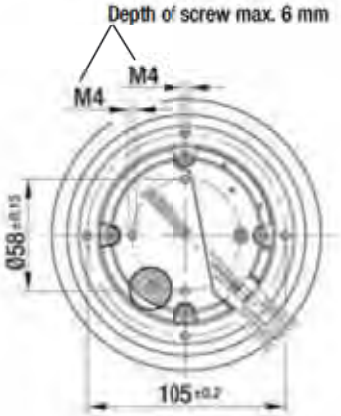

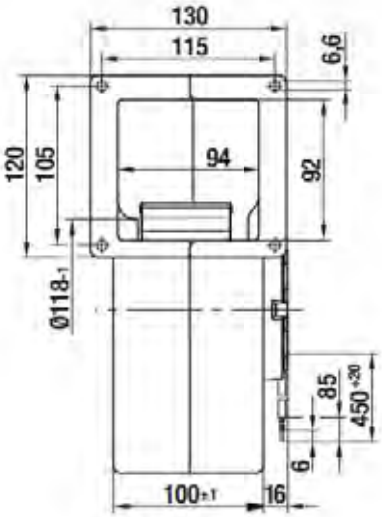

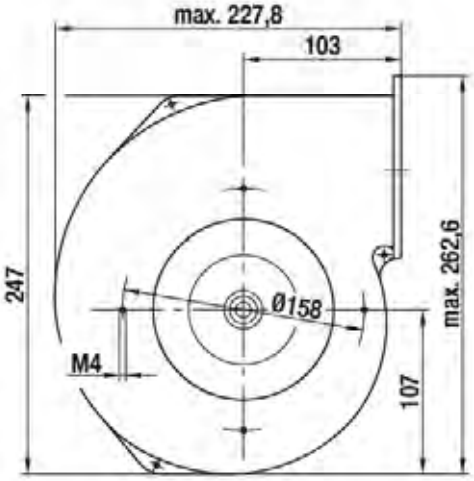

EC centrifugal fan and blowers

single inlet, constant air flow, Ø 140

- **Material:** Housing: Die-cast aluminium
  Impeller: PP plastic
  Rotor: Galvanised
  Electronics enclosure: Die-cast aluminium
- **Direction of rotation:** Clockwise, seen on rotor
- **Type of protection:** IP 44
- **Insulation class:** "B"
- **Mounting position:** Any
- **Condensate discharges:** None
- **Mode of operation:** Continuous operation (S1)
- **Bearings:** Maintenance-free ball bearings

Nominal data

Type	Motor	Curve	Nominal voltage	Frequency	Speed/rpm	Max. power input (1)	Max. current draw (1)	Min. back pressure	Perm. amb. temp.	Electr. connection
			VAC	Hz	rpm	W	A	Pa	°C	p. 602
*3G 140	M3G 055-CF	Ⓐ	1~ 230	50/60	1380	70	0.60	0	-25 to +60	H2)

subject to alterations

(1) Nominal data in operating point with maximum load and 230 VAC

Curves

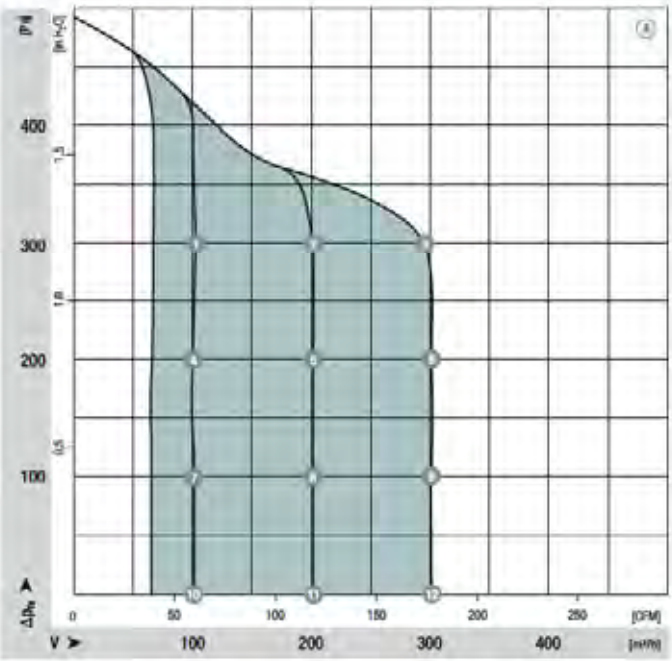

	n [rpm]	P_1 [W]	I [A]	Lp_A [dB(A)]	η_{tL} [%]
Ⓐ ❶	2380	33	0.25	59	37
Ⓐ ❷	2495	51	0.45	60	50
Ⓐ ❸	2400	67	0.55	60	57
Ⓐ ❹	2030	22	0.20	54	38
Ⓐ ❺	2000	34	0.30	55	54
Ⓐ ❻	2110	61	0.50	60	55
Ⓐ ❼	1325	12	0.10	46	36
Ⓐ ❽	1460	21	0.20	51	48
Ⓐ ❾	1755	43	0.35	58	48
Ⓐ ❿	480	3	0.05	33	—
Ⓐ ⓫	890	11	0.10	45	—
Ⓐ ⓬	1380	31	0.25	55	—

- **Technical features:**
  - Input for set value Lin 0-10 VDC / PWM (1.7 V ≙ 50 m³/h, 10 V ≙ 300 m³/h)
  - Output 10 VDC max. 1.1 mA
  - Tach output
  - Locked-rotor protection
- **EMC:** Interference emission acc. to EN 61000-6-3
  Interference immunity acc. to EN 61000-6-1
  Harmonics acc. to DIN EN 61000-3-2/3
- **Leakage current:** < 3.5 mA acc. to EN 60950-1
- **Cable exit:** Variable
- **Protection class:** I
- **Product conforming to standards:** EN 60335-1, CE
- **Approvals:** GOST; VDE, UL, CSA, CCC are applied for
- **Air intake:** Constant air flow curves can only be attained with unobstructed air intake (s. p. 586)

Centrifugal fan	Mass of centrifugal fan kg	Centrifugal blower with flange	Mass of centrifugal blower kg
R3G 140-AW05-12	1.3	G3G 140-AW05-12	2.6

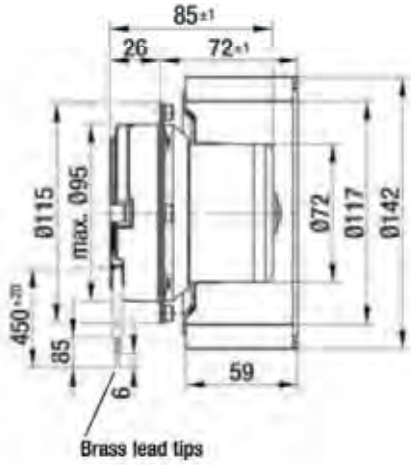

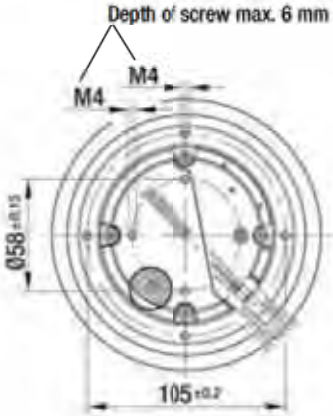

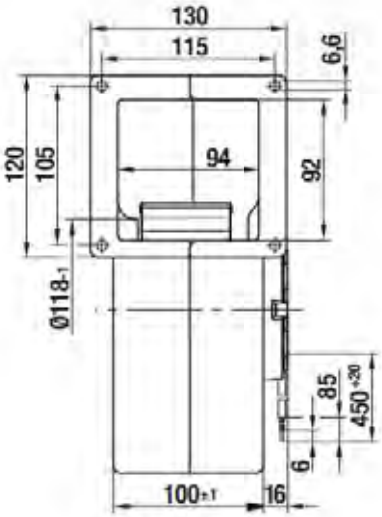

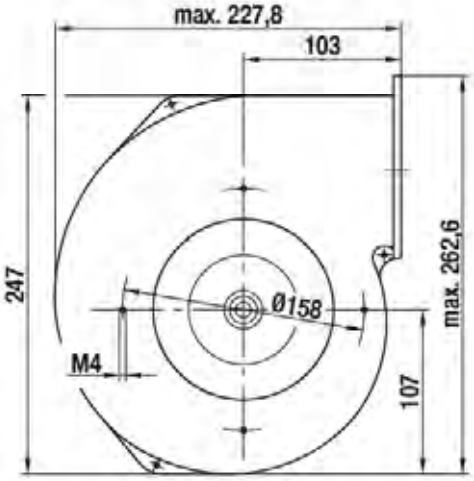

EC centrifugal fan and blowers

single inlet, Ø 146

- **Material:** Housing: Die-cast aluminium
  Impeller: Galvanised sheet steel
  Rotor: Galvanised
  Electronics enclosure: Die-cast aluminium
- **Direction of rotation:** Clockwise, seen on rotor
- **Type of protection:** IP 44
- **Insulation class:** "B"
- **Mounting position:** Shaft horizontal or rotor on top; rotor on bottom on request
- **Condensate discharges:** None
- **Mode of operation:** Continuous operation (S1)
- **Bearings:** Maintenance-free ball bearings

Nominal data		Curve	Nominal voltage range	Frequency	Speed/rpm	Max. power input (1)	Max. current draw (1)	Min. back pressure	Perm. amb. temp.	Electr. connection
Type	**Motor**		**VAC**	**Hz**	**rpm**	**W**	**A**	**Pa**	**°C**	p. 603
***3G 146**	M3G 074-CF	Ⓐ	1~ 100-130	50/60	2430	170	2.20	0	-25 to +60	J1)

subject to alterations

(1) Nominal data in operating point with maximum load and 115 VAC

Curves

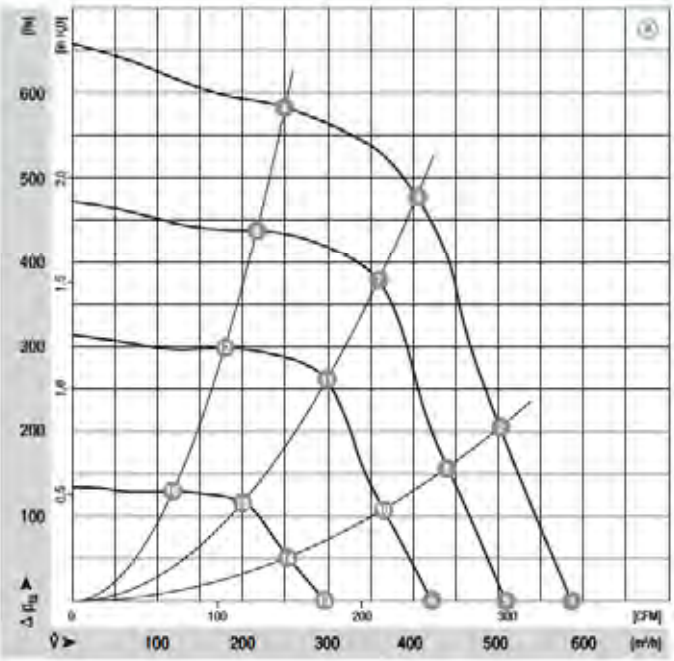

	n [rpm]	P_1 [W]	I [A]	Lp_A [dB(A)]	η_{fl} [%]
Ⓐ ❶	2430	168	2.10	71	—
Ⓐ ❷	2720	167	2.10	70	40
Ⓐ ❸	3040	159	2.00	68	55
Ⓐ ❹	3230	119	1.50	67	50
Ⓐ ❺	2120	110	1.40	67	—
Ⓐ ❻	2390	109	1.40	66	40
Ⓐ ❼	2700	109	1.40	65	56
Ⓐ ❽	2800	77	1.00	63	49
Ⓐ ❾	1770	66	0.90	63	—
Ⓐ ❿	1980	66	0.90	62	39
Ⓐ ⓫	2230	65	0.90	60	53
Ⓐ ⓬	2330	48	0.70	59	44
Ⓐ ⓭	1250	26	0.40	54	—
Ⓐ ⓮	1390	26	0.40	52	32
Ⓐ ⓯	1520	24	0.40	51	43
Ⓐ ⓰	1560	19	0.30	50	32

ebmpapst

- **Technical features:**
  - PFC (passive)
  - Control input 0-10 VDC / PWM
  - Output 10 VDC max. 1.1 mA
  - Tach output
  - Over-temperature protected electronics / motor
- **EMC:** Interference emission acc. to EN 61000-6-3
  Interference immunity acc. to EN 61000-6-1
  Harmonics acc. to DIN EN 61000-3-2/3
- **Leakage current:** < 3.5 mA acc. to EN 60950-1
- **Cable exit:** Variable
- **Protection class:** I
- **Product conforming to standards:** EN 60335-1, EN 61800-5-1, EN 60950-1, CE
- **Approvals:** UL, CSA; CCC, GOST are applied for

Centrifugal fan	Mass of centrifugal fan kg	Centrifugal blower with flange	Mass of centrifugal blower kg
R3G 146-AB72 -01	2.0	G3G 146-AB72 -01	3.5

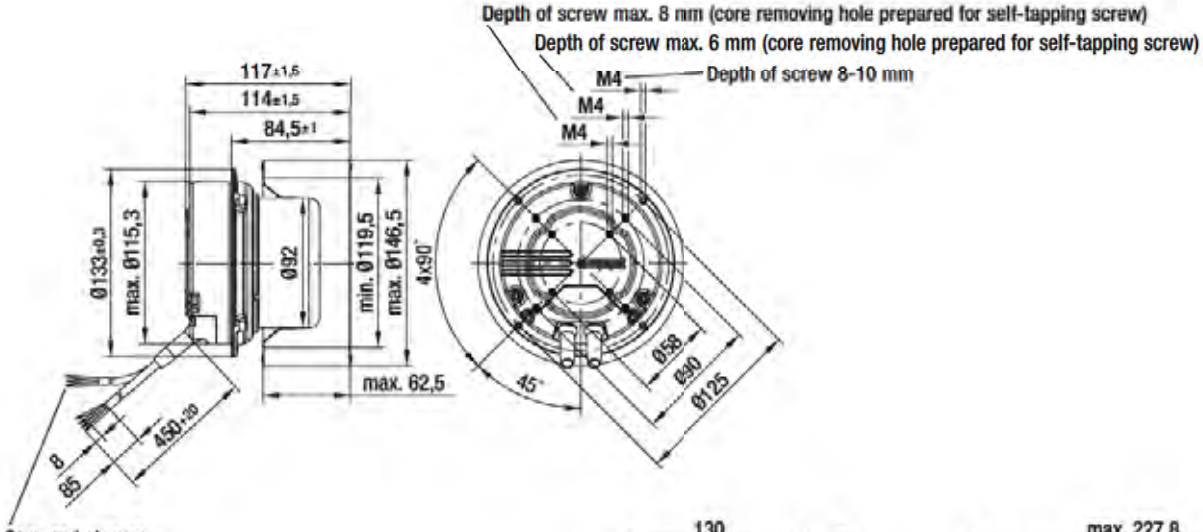

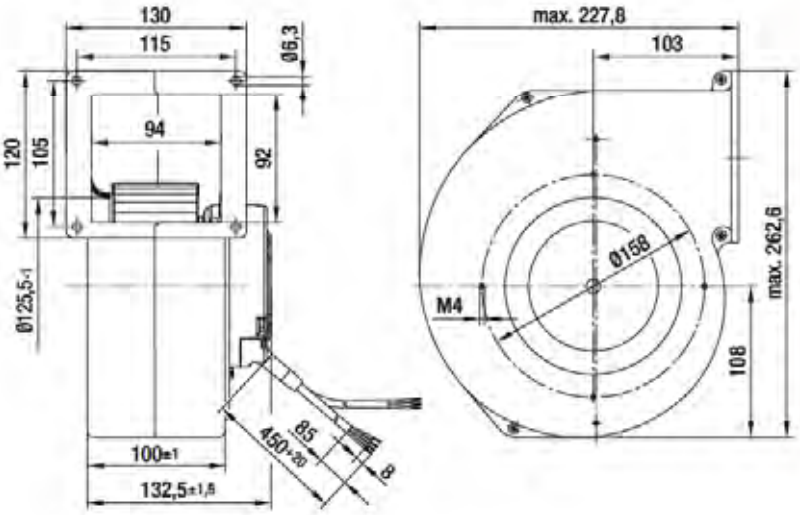

EC centrifugal fan and blowers

single inlet, Ø 146

- **Material:** Housing: Die-cast aluminium
  Impeller: Galvanised sheet steel
  Rotor: Galvanised
  Electronics enclosure: Die-cast aluminium
- **Direction of rotation:** Clockwise, seen on rotor
- **Type of protection:** IP 44
- **Insulation class:** "B"
- **Mounting position:** Shaft horizontal or rotor on top; rotor on bottom on request
- **Condensate discharges:** None
- **Mode of operation:** Continuous operation (S1)
- **Bearings:** Maintenance-free ball bearings

Nominal data		Curve	Nominal voltage range	Frequency	Speed/rpm	Max. power input (1)	Max. current draw (1)	Min. back pressure	Perm. amb. temp.	Electr. connection
Type	**Motor**		**VAC**	**Hz**	**rpm**	**W**	**A**	**Pa**	**°C**	p. 603
***3G 146**	M3G 074-CF	Ⓐ	1~ 200-277	50/60	2520	175	1.30	0	-25 to +60	J1)

subject to alterations

(1) Nominal data in operating point with maximum load and 230 VAC

Curves

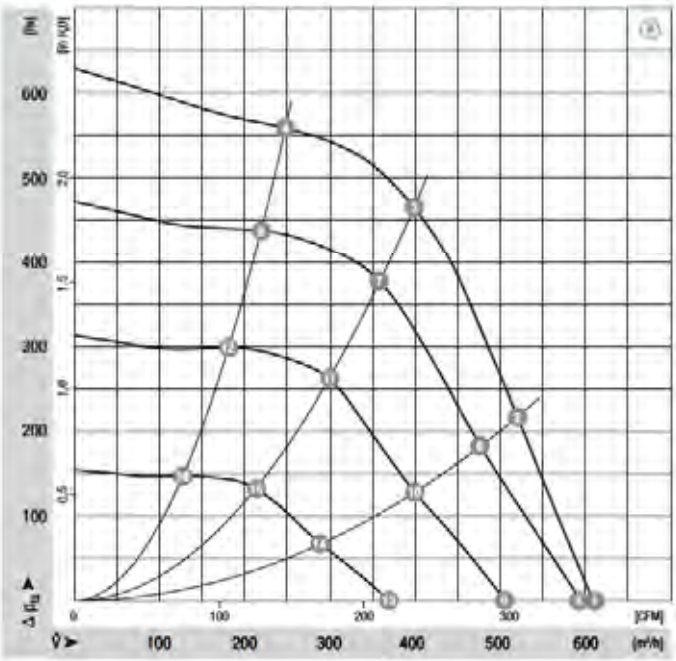

	n [rpm]	P_1 [W]	I [A]	Lp_A [dB(A)]	η_{tt} [%]
Ⓐ ❶	2520	175	1.30	71	—
Ⓐ ❷	2840	172	1.20	70	43
Ⓐ ❸	3030	144	1.10	68	60
Ⓐ ❹	3210	105	0.80	67	51
Ⓐ ❺	2430	172	1.30	71	—
Ⓐ ❻	2545	138	1.10	68	42
Ⓐ ❼	2655	105	0.80	65	60
Ⓐ ❽	2770	78	0.60	63	50
Ⓐ ❾	2080	108	0.80	67	—
Ⓐ ❿	2160	84	0.70	64	41
Ⓐ ⓫	2240	70	0.60	66	52
Ⓐ ⓬	2310	50	0.40	59	51
Ⓐ ⓭	1540	48	0.40	59	—
Ⓐ ⓮	1580	39	0.30	56	34
Ⓐ ⓯	1610	29	0.25	52	41
Ⓐ ⓰	1640	22	0.20	51	40

ebmpapst

- **Technical features:**
  - PFC (passive)
  - Control input 0-10 VDC / PWM
  - Output 10 VDC max. 1.1 mA
  - Tach output
  - Over-temperature protected electronics / motor
- **EMC:** Interference emission acc. to EN 61000-6-3
  Interference immunity acc. to EN 61000-6-1
  Harmonics acc. to DIN EN 61000-3-2/3
- **Leakage current:** < 3.5 mA acc. to EN 60950-1
- **Cable exit:** Variable
- **Protection class:** I
- **Product conforming to standards:** EN 60335-1, EN 61800-5-1, EN 60950-1, CE
- **Approvals:** UL, CSA; CCC, GOST are applied for

Centrifugal fan	Mass of centrifugal fan kg	Centrifugal blower with flange	Mass of centrifugal blower kg
R3G 146-AB54 -01	2.0	G3G 146-AB54 -01	3.5

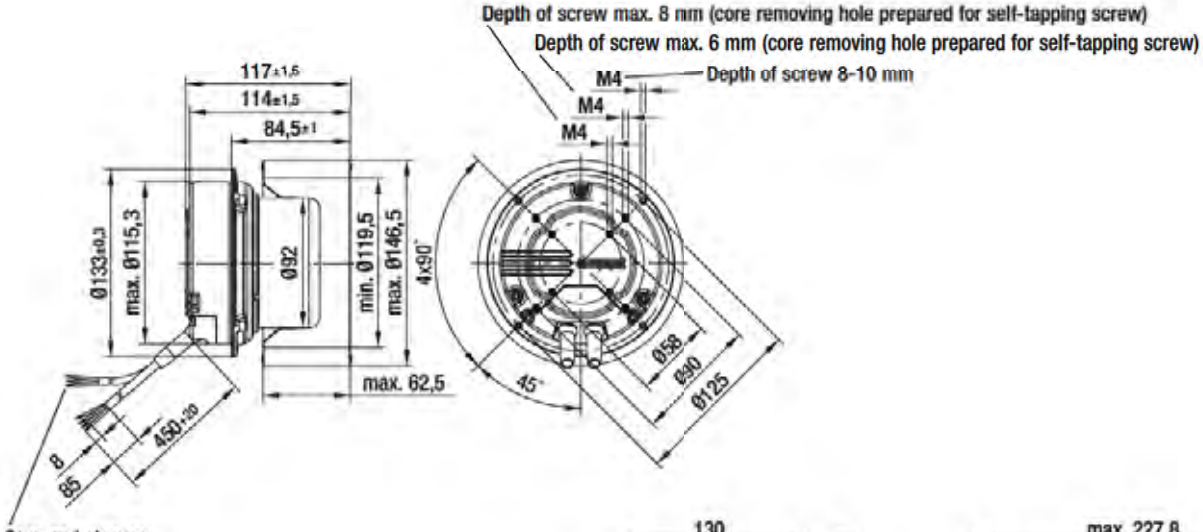

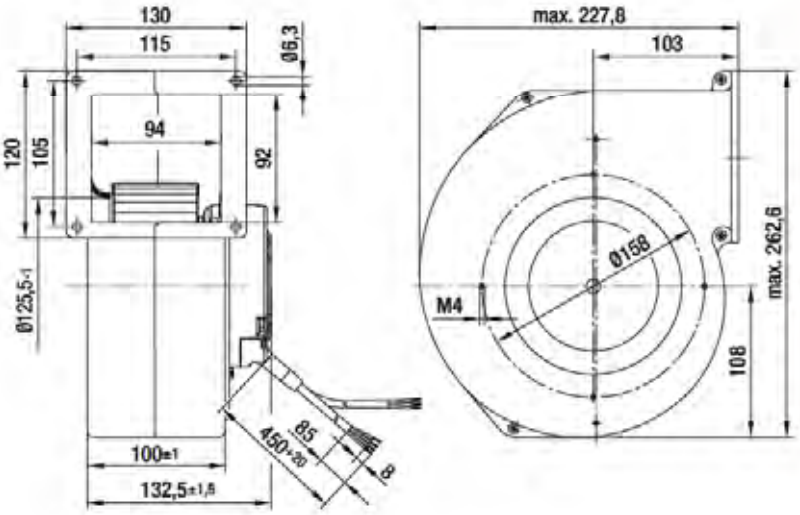

EC centrifugal fan and blowers

single inlet, Ø 160

- **Material:** Housing: Die-cast aluminium
  Impeller: Galvanised sheet steel
  Rotor: Galvanised
  Electronics enclosure: Die-cast aluminium
- **Direction of rotation:** Clockwise, seen on rotor
- **Type of protection:** IP 44
- **Insulation class:** "B"
- **Mounting position:** Shaft horizontal or rotor on top; rotor on bottom on request
- **Condensate discharges:** None
- **Mode of operation:** Continuous operation (S1)
- **Bearings:** Maintenance-free ball bearings

Nominal data		Curve	Nominal voltage range	Frequency	Speed/rpm	Max. power input (1)	Max. current draw (1)	Min. back pressure	Perm. amb. temp.	Electr. connection
Type	**Motor**		**VAC**	**Hz**	**rpm**	**W**	**A**	**Pa**	**°C**	p. 603
***3G 160**	M3G 074-CF	Ⓐ	1~ 100-130	50/60	2100	170	2.20	0	-25 to +60	J1)

subject to alterations

(1) Nominal data in operating point with maximum load and 115 VAC

Curves

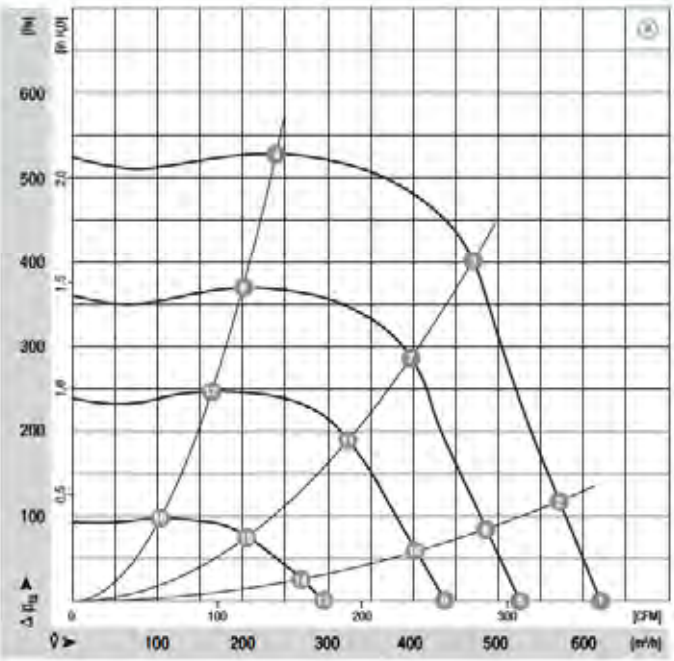

	n [rpm]	P_1 [W]	I [A]	Lp_A [dB(A)]	η_{EL} [%]
Ⓐ ❶	2100	166	2.10	69	—
Ⓐ ❷	2230	167	2.10	68	41
Ⓐ ❸	2550	164	2.10	69	58
Ⓐ ❹	2640	104	1.40	67	49
Ⓐ ❺	1810	106	1.40	64	—
Ⓐ ❻	1930	105	1.40	64	38
Ⓐ ❼	2160	102	1.30	65	55
Ⓐ ❽	2230	62	0.90	62	43
Ⓐ ❾	1510	64	0.90	60	—
Ⓐ ❿	1600	64	0.90	60	36
Ⓐ ⓫	1780	61	0.90	60	49
Ⓐ ⓬	1830	41	0.60	58	39
Ⓐ ⓭	1020	25	0.40	51	—
Ⓐ ⓮	1080	24	0.40	50	29
Ⓐ ⓯	1150	22	0.30	50	37
Ⓐ ⓰	1170	16	0.30	47	25

ebmpapst

- **Technical features:**
  - PFC (passive)
  - Control input 0-10 VDC / PWM
  - Output 10 VDC max. 1.1 mA
  - Tach output
  - Over-temperature protected electronics / motor
- **EMC:** Interference emission acc. to EN 61000-6-3
  Interference immunity acc. to EN 61000-6-1
  Harmonics acc. to DIN EN 61000-3-2/3
- **Leakage current:** < 3.5 mA acc. to EN 60950-1
- **Cable exit:** Variable
- **Protection class:** I
- **Product conforming to standards:** EN 60335-1, EN 61800-5-1, EN 60950-1, CE
- **Approvals:** UL, CSA; CCC, GOST are applied for

Centrifugal fan	Mass of centrifugal fan kg	Centrifugal blower with flange	Mass of centrifugal blower kg
R3G 160-AC70 -01	2.0	G3G 160-AC70 -01	3.5

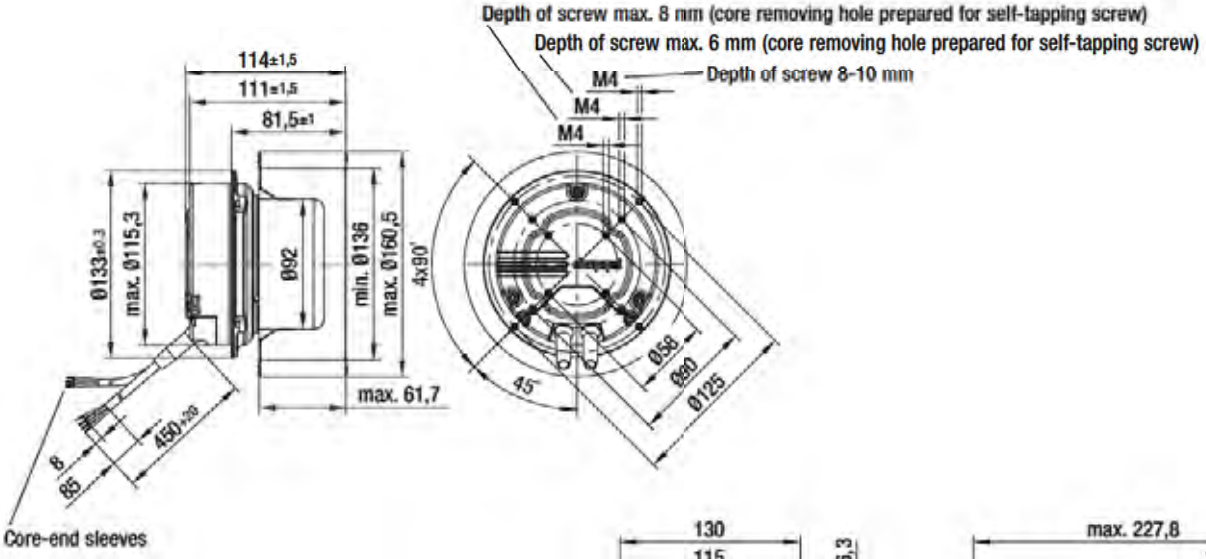

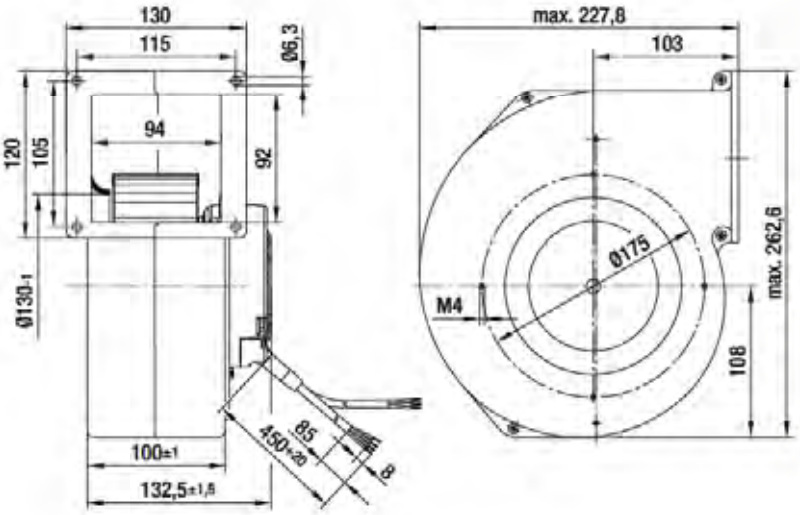

EC centrifugal fan and blowers

single inlet, Ø 160

- **Material:** Housing: Die-cast aluminium
  Impeller: Galvanised sheet steel
  Rotor: Coated in black
  Electronics enclosure: Die-cast aluminium
- **Direction of rotation:** Clockwise, seen on rotor
- **Type of protection:** IP 44
- **Insulation class:** "B"
- **Mounting position:** Shaft horizontal or rotor on top; rotor on bottom on request
- **Condensate discharges:** None
- **Mode of operation:** Continuous operation (S1)
- **Bearings:** Maintenance-free ball bearings

Nominal data		Curve	Nominal voltage range	Frequency	Speed/rpm	Max. power input (1)	Max. current draw (1)	Min. back pressure	Perm. amb. temp.	Electr. connection
Type	**Motor**		**VAC**	**Hz**	**rpm**	**W**	**A**	**Pa**	**°C**	p. 603
***3G 160**	M3G 074-CF	Ⓐ	1~ 200-277	50/60	2150	175	1.30	0	-25 to +60	J1)

subject to alterations

(1) Nominal data in operating point with maximum load and 230 VAC

Curves

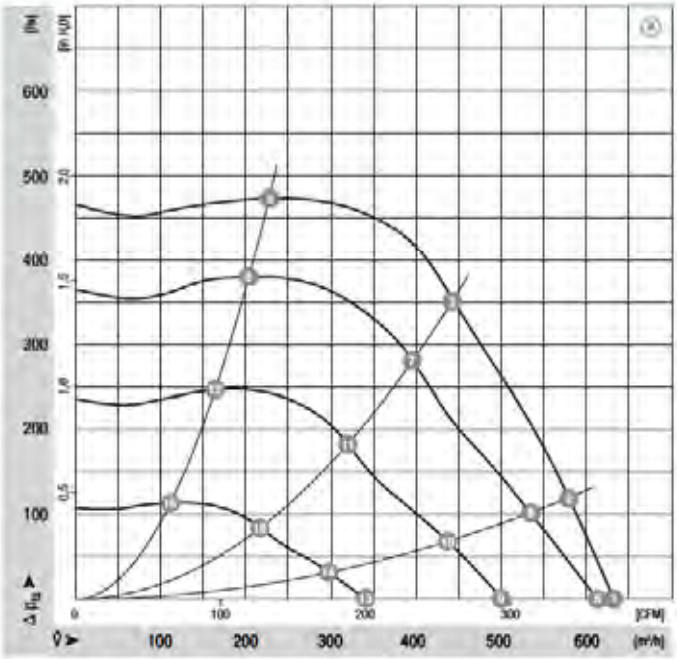

	n [rpm]	P_1 [W]	I [A]	Lp_A [dB(A)]	η_{fl} [%]
Ⓐ ❶	2150	170	1.25	70	—
Ⓐ ❷	2320	172	1.30	70	39
Ⓐ ❸	2450	139	1.10	68	41
Ⓐ ❹	2540	91	0.70	67	46
Ⓐ ❺	2070	153	1.10	69	—
Ⓐ ❻	2090	138	1.00	67	40
Ⓐ ❼	2150	101	0.80	65	56
Ⓐ ❽	2205	68	0.60	63	45
Ⓐ ❾	1700	91	0.70	63	—
Ⓐ ❿	1730	80	0.60	62	37
Ⓐ ⓫	1760	60	0.50	59	49
Ⓐ ⓬	1795	41	0.30	58	37
Ⓐ ⓭	1190	37	0.30	54	—
Ⓐ ⓮	1200	33	0.30	53	29
Ⓐ ⓯	1220	27	0.25	51	35
Ⓐ ⓰	1240	20	0.20	48	27

- **Technical features:**
  - PFC (passive)
  - Control input 0-10 VDC / PWM
  - Output 10 VDC max. 1.1 mA
  - Tach output
  - Over-temperature protected electronics / motor
- **EMC:** Interference emission acc. to EN 61000-6-3
  Interference immunity acc. to EN 61000-6-1
  Harmonics acc. to DIN EN 61000-3-2/3
- **Leakage current:** < 3.5 mA acc. to EN 60950-1
- **Cable exit:** Variable
- **Protection class:** I
- **Product conforming to standards:** EN 60335-1, EN 61800-5-1, EN 60950-1, CE
- **Approvals:** UL, CSA; CCC, GOST are applied for

Centrifugal fan	Mass of centrifugal fan kg	Centrifugal blower with flange	Mass of centrifugal blower kg
R3G 160-AC50 -01	2.0	G3G 160-AC50 -01	3.5

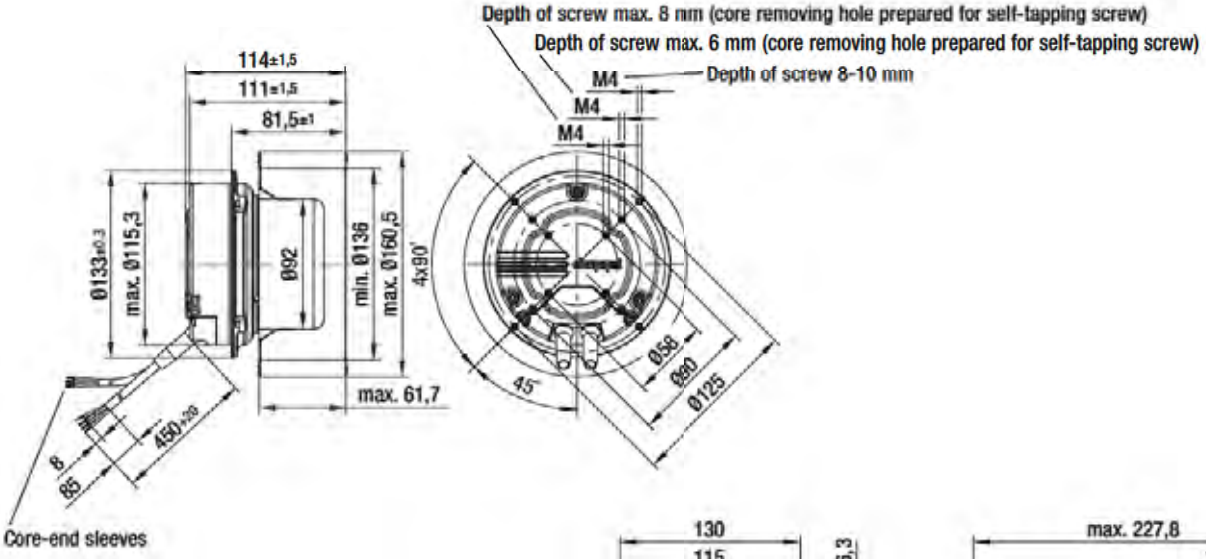

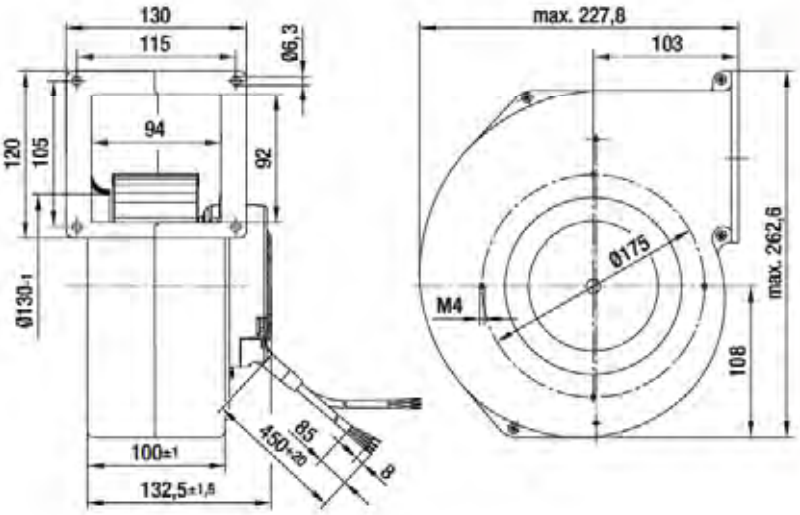

EC centrifugal fan and blowers

single inlet, constant air flow, Ø 160

- **Material:** Housing: Die-cast aluminium
  Impeller: Galvanised sheet steel
  Rotor: Galvanised
  Electronics enclosure: Die-cast aluminium
- **Direction of rotation:** Clockwise, seen on rotor
- **Type of protection:** IP 44
- **Insulation class:** "B"
- **Mounting position:** Shaft horizontal or rotor on top; rotor on bottom on request
- **Condensate discharges:** None
- **Mode of operation:** Continuous operation (S1)
- **Bearings:** Maintenance-free ball bearings

Nominal data		Curve	Nominal voltage	Frequency	Speed/rpm	Max. power input (1)	Max. current draw (1)	Min. back pressure	Perm. amb. temp.	Electr. connection
Type	**Motor**		**VAC**	**Hz**	**rpm**	**W**	**A**	**Pa**	**°C**	p. 604
***3G 160**	M3G 074-BF	Ⓐ	1~ 230	50/60	1340	175	1.30	0	-25 to +60	J2)

subject to alterations

(1) Nominal data in operating point with maximum load and 230 VAC

Curves

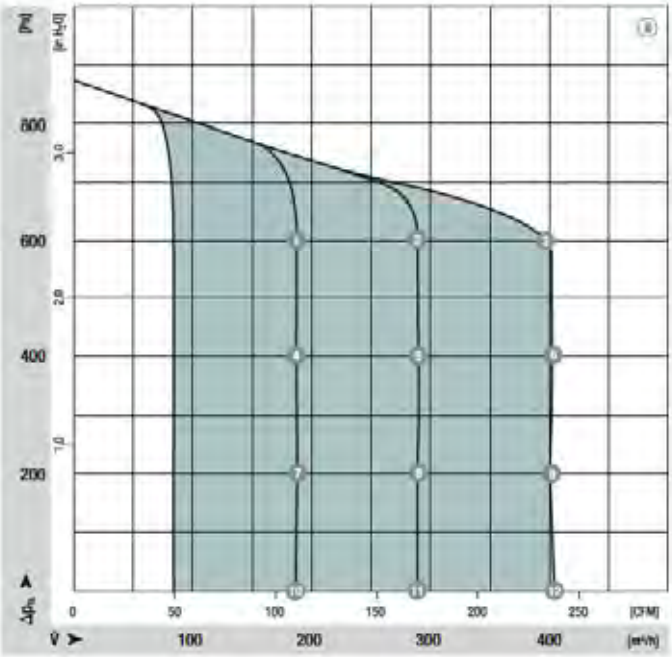

		n [rpm]	P_1 [W]	I [A]	Lp_A [dB(A)]	η_{tt} [%]
Ⓐ	1	2910	110	0.90	68	44
Ⓐ	2	2930	142	1.10	69	52
Ⓐ	3	2780	175	1.30	71	63
Ⓐ	4	2380	68	0.60	63	47
Ⓐ	5	2360	88	0.70	65	58
Ⓐ	6	2450	132	0.95	67	62
Ⓐ	7	1690	35	0.30	57	49
Ⓐ	8	1760	51	0.40	60	56
Ⓐ	9	2020	94	0.70	63	50
Ⓐ	10	610	9	0.10	40	—
Ⓐ	11	950	22	0.25	51	—
Ⓐ	12	1340	51	0.40	58	—

- **Technical features:**
  - Input for set value Lin 0-10 VDC / PWM (1.7 V ≙ 50 m³/h, 10 V ≙ 300 m³/h)
  - PFC (passive)
  - Output 10 VDC max. 1.1 mA
  - Tach output
  - Over-temperature protected electronics / motor
- **EMC:** Interference emission acc. to EN 61000-6-3
  Interference immunity acc. to EN 61000-6-1
  Harmonics acc. to DIN EN 61000-3-2/3
- **Leakage current:** < 3.5 mA acc. to EN 60950-1
- **Cable exit:** Variable
- **Protection class:** I
- **Product conforming to standards:** EN 60335-1, EN 61800-5-1, EN 60950-1, CE
- **Approvals:** UL, CSA; CCC, GOST are applied for
- **Air intake:** Constant air flow curves can only be attained with unobstructed air intake (s. p. 586)

Centrifugal fan	Mass of centrifugal fan kg	Centrifugal blower with flange	Mass of centrifugal blower kg
R3G 160-AD52 -01	2.0	G3G 160-AD52 -01	3.5

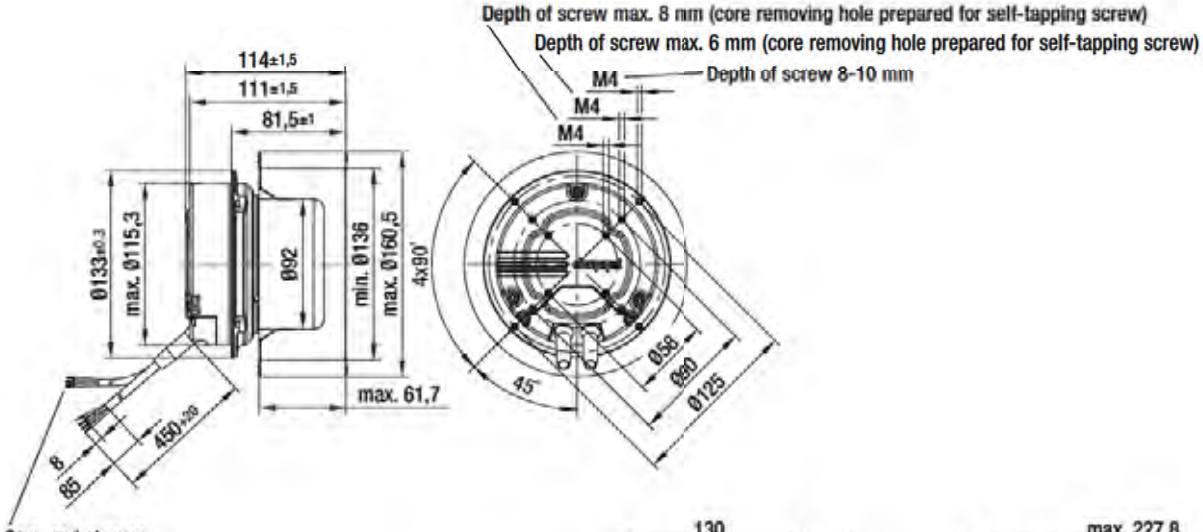

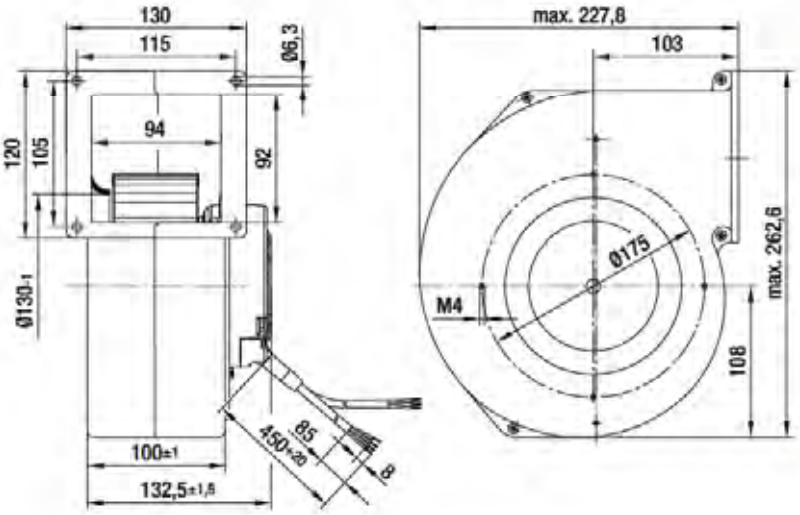

EC centrifugal fan and blowers

single inlet, Ø 180

- **Material:** Housing: Galvanised sheet steel
  Impeller: Galvanised sheet steel
  Rotor: Galvanised
  Electronics enclosure: Die-cast aluminium
- **Direction of rotation:** Clockwise, seen on rotor
- **Type of protection:** IP 44
- **Insulation class:** "B"
- **Mounting position:** Shaft horizontal or rotor on top; rotor on bottom on request
- **Condensate discharges:** None
- **Mode of operation:** Continuous operation (S1)
- **Bearings:** Maintenance-free ball bearings

Nominal data		Curve	Nominal voltage range	Frequency	Speed/rpm	Max. power input (1)	Max. current draw (1)	Min. back pressure	Perm. amb. temp.	Electr. connection
Type	**Motor**		**VAC**	**Hz**	**rpm**	**W**	**A**	**Pa**	**°C**	p. 603
***3G 180**	M3G 074-CF	Ⓐ	1~ 100-130	50/60	1320	175	2.20	0	-25 to +60	J1)

subject to alterations

(1) Nominal data in operating point with maximum load and 115 VAC

Curves

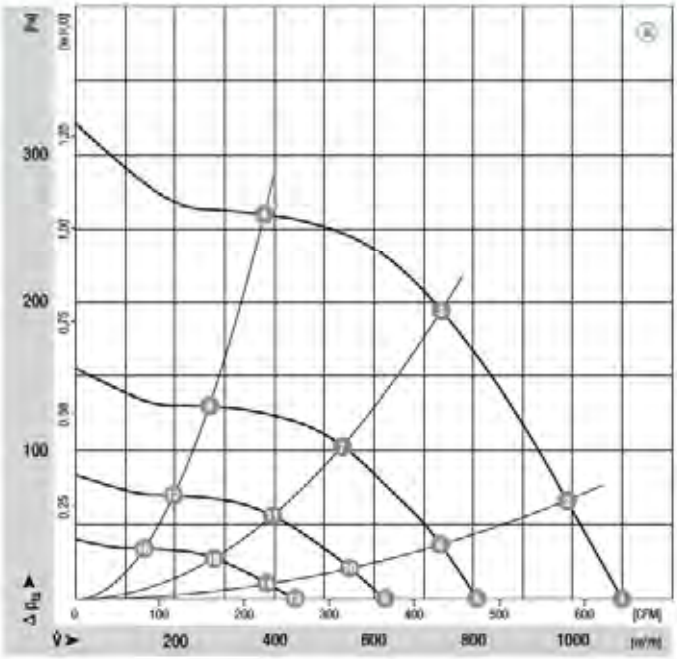

	n [rpm]	P_1 [W]	I [A]	Lp_A [dB(A)]	η_{fl} [%]
Ⓐ ❶	1320	171	2.10	67	—
Ⓐ ❷	1370	151	1.90	65	57
Ⓐ ❸	1460	115	1.50	61	69
Ⓐ ❹	1570	69	0.90	59	59
Ⓐ ❺	990	69	0.90	59	—
Ⓐ ❻	1030	65	0.90	57	54
Ⓐ ❼	1080	48	0.70	54	64
Ⓐ ❽	1130	29	0.40	51	57
Ⓐ ❾	770	35	0.50	52	—
Ⓐ ❿	790	30	0.40	50	49
Ⓐ ⓫	810	23	0.30	46	55
Ⓐ ⓬	840	15	0.20	42	40
Ⓐ ⓭	560	16	0.20	44	—
Ⓐ ⓮	560	13	0.20	40	38
Ⓐ ⓯	580	11	0.20	36	41
Ⓐ ⓰	590	8	0.10	33	24

ebmpapst

- **Technical features:**
  - PFC (passive)
  - Control input 0-10 VDC / PWM
  - Output 10 VDC max. 1.1 mA
  - Tach output
  - Over-temperature protected electronics / motor
- **EMC:** Interference emission acc. to EN 61000-6-3
  Interference immunity acc. to EN 61000-6-1
  Harmonics acc. to DIN EN 61000-3-2/3
- **Leakage current:** < 3.5 mA acc. to EN 60950-1
- **Cable exit:** Variable
- **Protection class:** I
- **Product conforming to standards:** EN 60335-1, EN 61800-5-1, EN 60950-1, CE
- **Approvals:** UL, CSA; CCC, GOST are applied for

Centrifugal fan	Mass of centrifugal fan kg	Centrifugal blower without flange	Mass of centrifugal blower kg
R3G 180-AU73 -01	2.0	G3G 180-EU73 -01	4.0

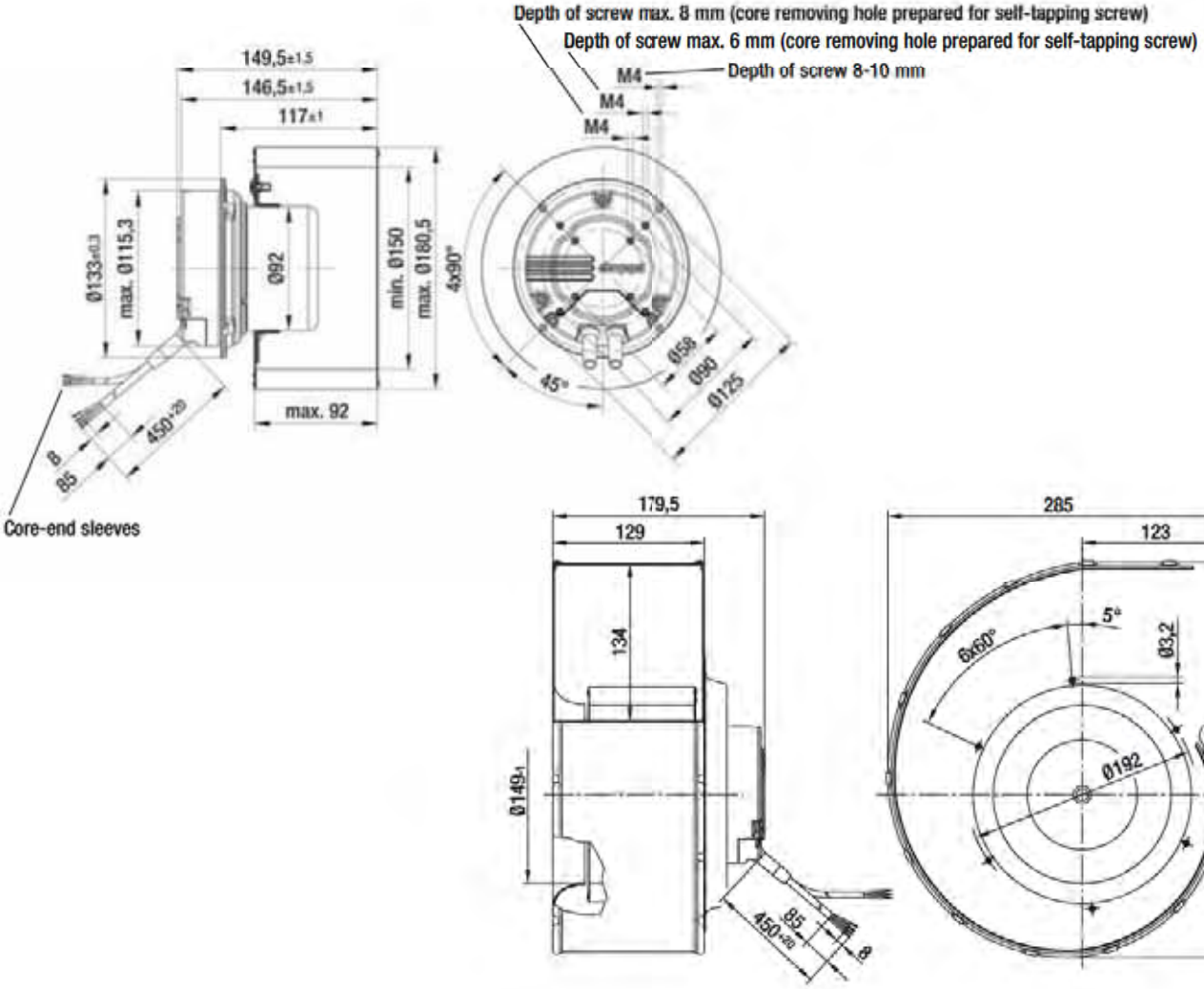

EC centrifugal fan and blowers

single inlet, Ø 180

- **Material:** Housing: Galvanised sheet steel
  Impeller: Galvanised sheet steel
  Rotor: Galvanised
  Electronics enclosure: Die-cast aluminium
- **Direction of rotation:** Clockwise, seen on rotor
- **Type of protection:** IP 44
- **Insulation class:** "B"
- **Mounting position:** Shaft horizontal or rotor on top; rotor on bottom on request
- **Condensate discharges:** None
- **Mode of operation:** Continuous operation (S1)
- **Bearings:** Maintenance-free ball bearings

Nominal data		Curve	Nominal voltage range	Frequency	Speed/rpm	Max. power input (1)	Max. current draw (1)	Min. back pressure	Perm. amb. temp.	Electr. connection
Type	**Motor**		**VAC**	**Hz**	**rpm**	**W**	**A**	**Pa**	**°C**	p. 603
***3G 180**	M3G 074-CF	Ⓐ	1~ 200-277	50/60	1320	162	1.20	150	-25 to +60	J1)

subject to alterations

(1) Nominal data in operating point with maximum load and 230 VAC

Curves

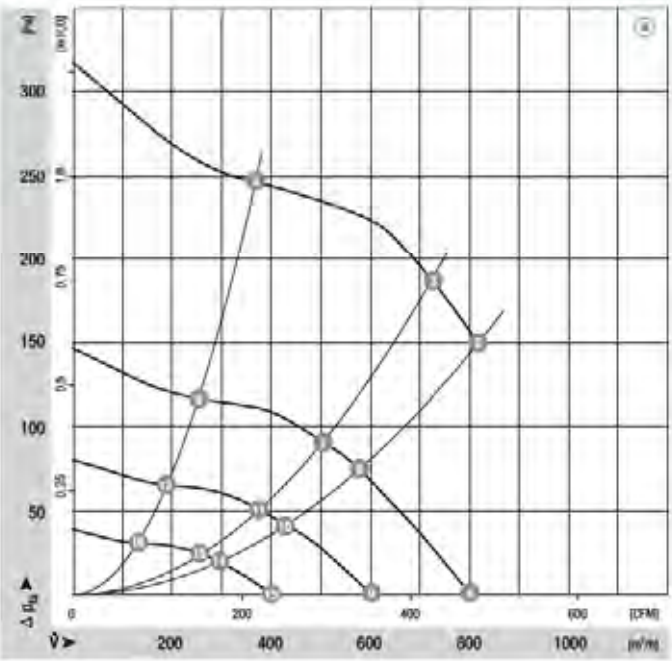

	n [rpm]	P_1 [W]	I [A]	Lp_A [dB(A)]	η_{EL} [%]
Ⓐ ❶	—	—	—	—	—
Ⓐ ❷	1420	118	1.90	62	59
Ⓐ ❸	1445	106	1.50	61	69
Ⓐ ❹	1530	65	1.00	59	56
Ⓐ ❺	975	65	1.00	58	—
Ⓐ ❻	995	56	0.90	56	54
Ⓐ ❼	1025	42	0.70	53	60
Ⓐ ❽	1065	26	0.45	49	45
Ⓐ ❾	745	31	0.50	52	—
Ⓐ ❿	755	28	0.45	49	47
Ⓐ ⓫	775	21	0.35	45	49
Ⓐ ⓬	805	15	0.25	42	34
Ⓐ ⓭	515	33	0.25	41	—
Ⓐ ⓮	520	12	0.20	39	33
Ⓐ ⓯	535	10	0.20	35	34
Ⓐ ⓰	560	8	0.15	32	20

ebmpapst

- **Technical features:**
  - PFC (passive)
  - Control input 0-10 VDC / PWM
  - Output 10 VDC max. 1.1 mA
  - Tach output
  - Over-temperature protected electronics / motor
- **EMC:** Interference emission acc. to EN 61000-6-3
  Interference immunity acc. to EN 61000-6-1
  Harmonics acc. to DIN EN 61000-3-2/3
- **Leakage current:** < 3.5 mA acc. to EN 60950-1
- **Cable exit:** Variable
- **Protection class:** I
- **Product conforming to standards:** EN 60335-1, EN 61800-5-1, EN 60950-1, CE
- **Approvals:** UL, CSA; CCC, GOST are applied for

Centrifugal fan	Mass of centrifugal fan kg	Centrifugal blower without flange	Mass of centrifugal blower kg
R3G 180-AU60 -01	2.0	G3G 180-EU60 -01	4.0

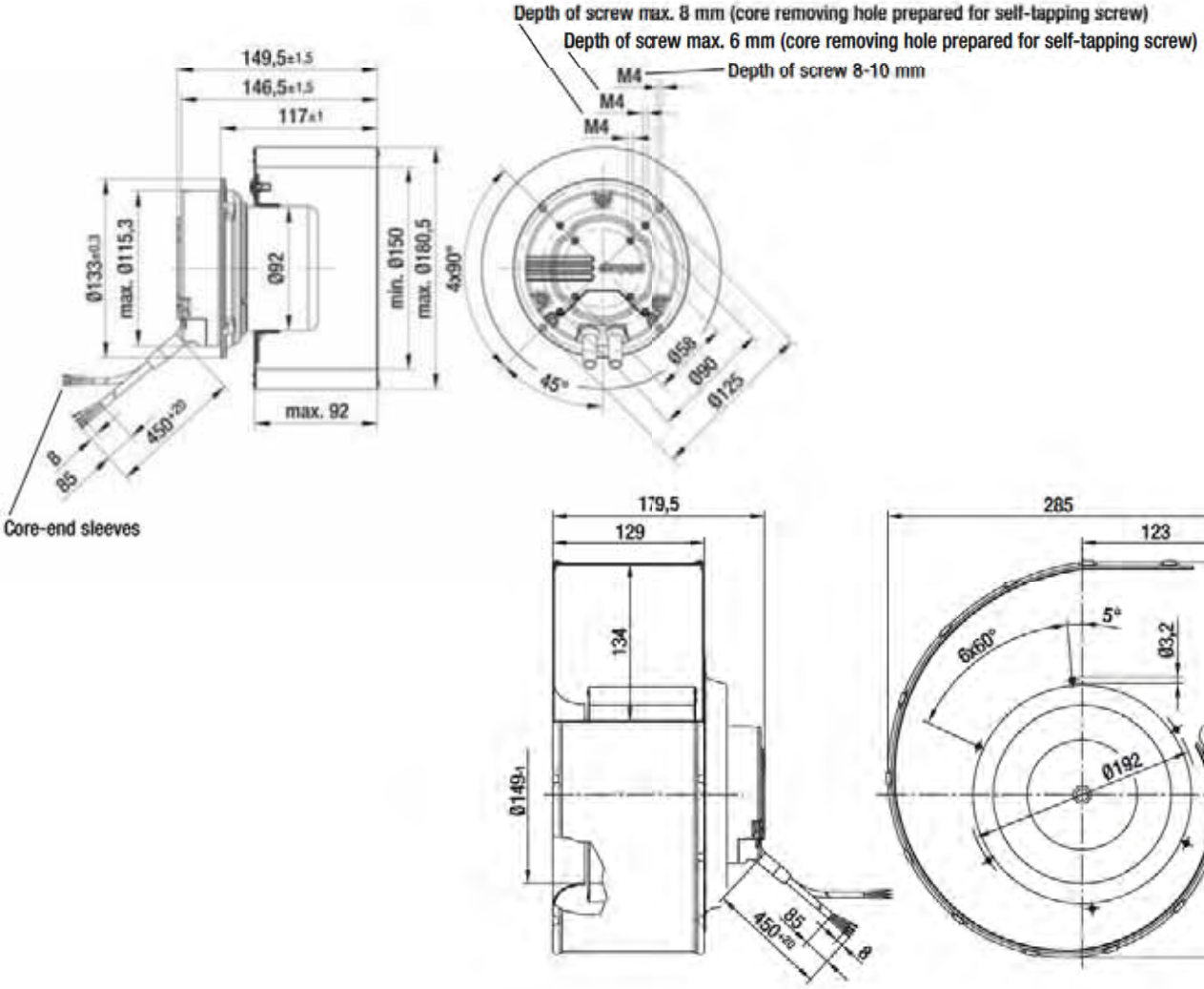

EC centrifugal fan and blowers

single inlet, Ø 180

- **Material:** Housing: Galvanised sheet steel
  Impeller: Galvanised sheet steel
  Rotor: Coated in black
  Electronics enclosure: Die-cast aluminium
- **Direction of rotation:** Clockwise, seen on rotor
- **Type of protection:** IP 54
- **Insulation class:** "B"
- **Mounting position:** Shaft horizontal or rotor on top; rotor on bottom on request
- **Condensate discharges:** None
- **Mode of operation:** Continuous operation (S1)
- **Bearings:** Maintenance-free ball bearings

Nominal data		Curve	Nominal voltage range	Frequency	Speed/rpm	Max. power input (1)	Max. current draw (1)	Min. back pressure	Perm. amb. temp.	Electr. connection
Type	**Motor**		**VAC**	**Hz**	**rpm**	**W**	**A**	**Pa**	**°C**	p. 605
***3G 180**	M3G 084-DF	Ⓐ	1~ 100-130	50/60	1970	335	3.90	200	-25 to +60	K1)

subject to alterations

(1) Nominal data in operating point with maximum load and 115 VAC

Curves

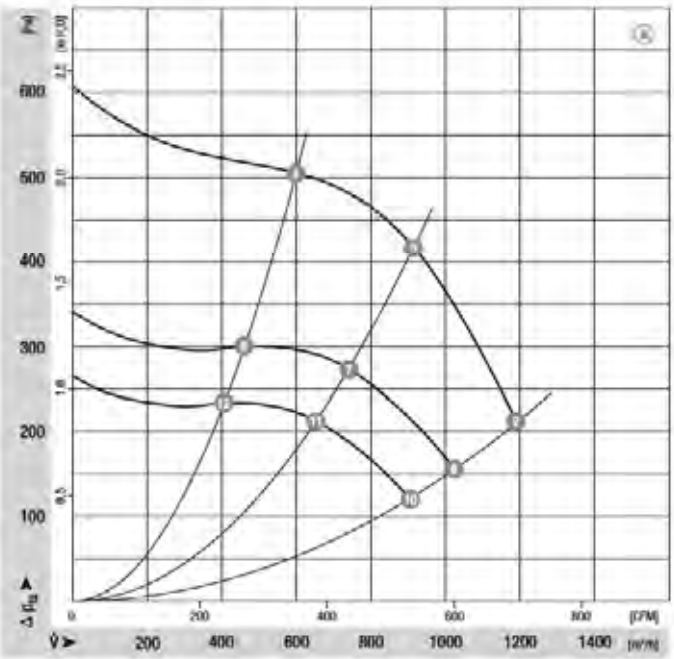

	n [rpm]	P_1 [W]	I [A]	Lp_A [dB(A)]	η_{tt} [%]
Ⓐ ❶	—	—	—	—	—
Ⓐ ❷	1970	335	3.90	78	52
Ⓐ ❸	2100	265	3.15	72	62
Ⓐ ❹	2205	195	2.35	70	56
Ⓐ ❺	—	—	—	—	—
Ⓐ ❻	1700	213	2.45	71	52
Ⓐ ❼	1700	140	1.65	65	62
Ⓐ ❽	1700	90	1.10	63	56
Ⓐ ❾	—	—	—	—	—
Ⓐ ❿	1500	147	1.70	68	52
Ⓐ ⓫	1500	96	1.15	62	62
Ⓐ ⓬	1500	61	0.75	59	46

ebmpapst

- **Technical features:**
  - PFC (passive)
  - Control input 0-10 VDC / PWM
  - Output 10 VDC max. 1.1 mA
  - Alarm relay
  - Over-temperature protected electronics / motor
- **EMC:** Interference emission acc. to EN 61000-6-3
  Interference immunity acc. to EN 61000-6-2
  Harmonics acc. to DIN EN 61000-3-2/3
- **Leakage current:** < 3.5 mA acc. to EN 61800-5-1
- **Cable exit:** Variable
- **Protection class:** I
- **Product conforming to standards:** EN 61800-5-1, CE
- **Approvals:** UL, CSA; CCC, GOST are applied for

Centrifugal fan	Mass of centrifugal fan kg	Centrifugal blower without flange	Mass of centrifugal blower kg
R3G 180-AA01 -81	3.9	G3G 180-AA01 -81	6.0

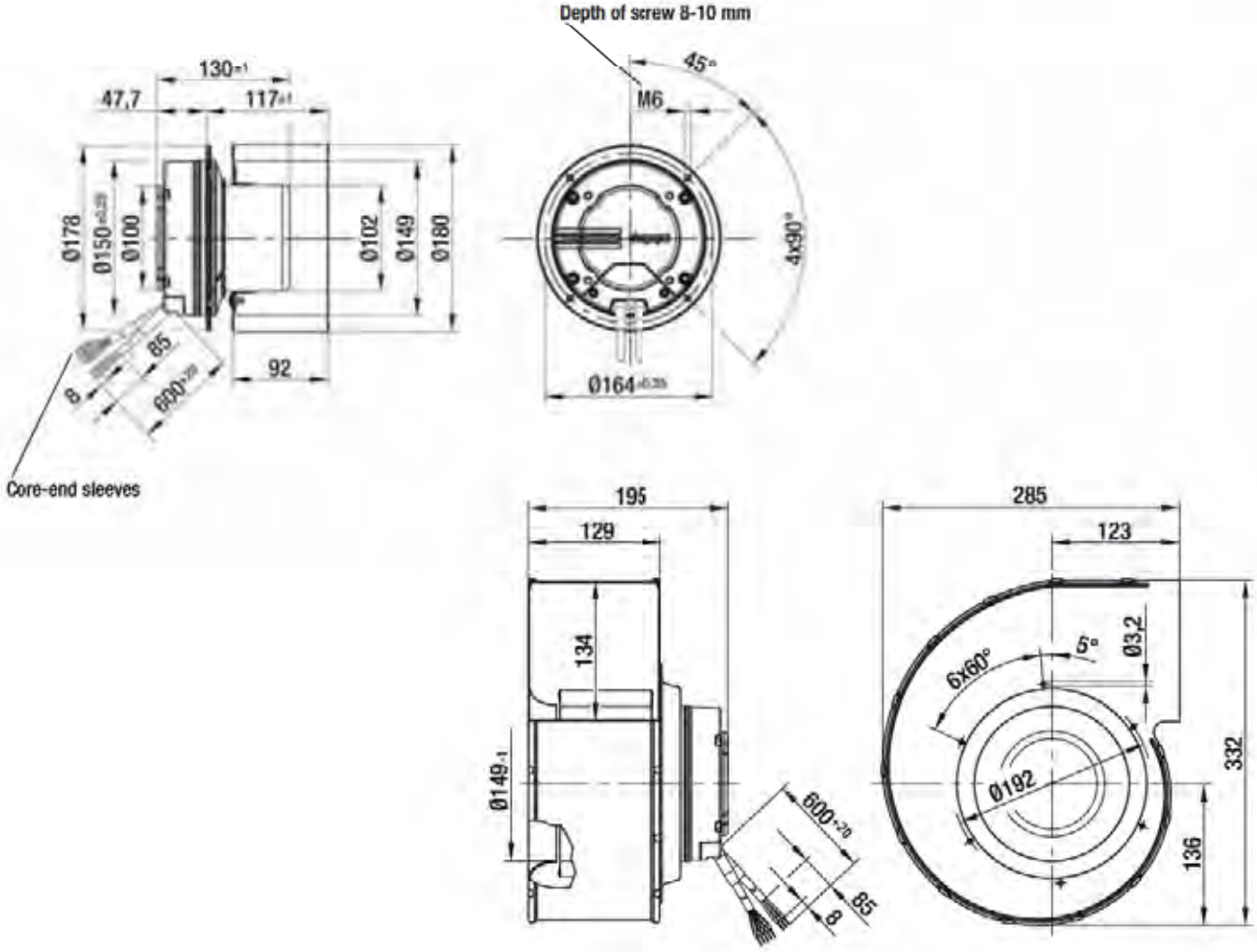

EC centrifugal fan and blowers

single inlet, Ø 180

- **Material:** Housing: Galvanised sheet steel
  Impeller: Galvanised sheet steel
  Rotor: Coated in black
  Electronics enclosure: Die-cast aluminium
- **Direction of rotation:** Clockwise, seen on rotor
- **Type of protection:** IP 54
- **Insulation class:** "B"
- **Mounting position:** Shaft horizontal or rotor on top; rotor on bottom on request
- **Condensate discharges:** None
- **Mode of operation:** Continuous operation (S1)
- **Bearings:** Maintenance-free ball bearings

Nominal data		Curve	Nominal voltage range	Frequency	Speed/rpm	Max. power input (1)	Max. current draw (1)	Min. back pressure	Perm. amb. temp.	Electr. connection
Type	**Motor**		**VAC**	**Hz**	**rpm**	**W**	**A**	**Pa**	**°C**	p. 605
***3G 180**	M3G 084-FA	Ⓐ	1~ 200-277	50/60	2450	510	3.15	300	-25 to +60	K1)

subject to alterations

(1) Nominal data in operating point with maximum load and 230 VAC

Curves

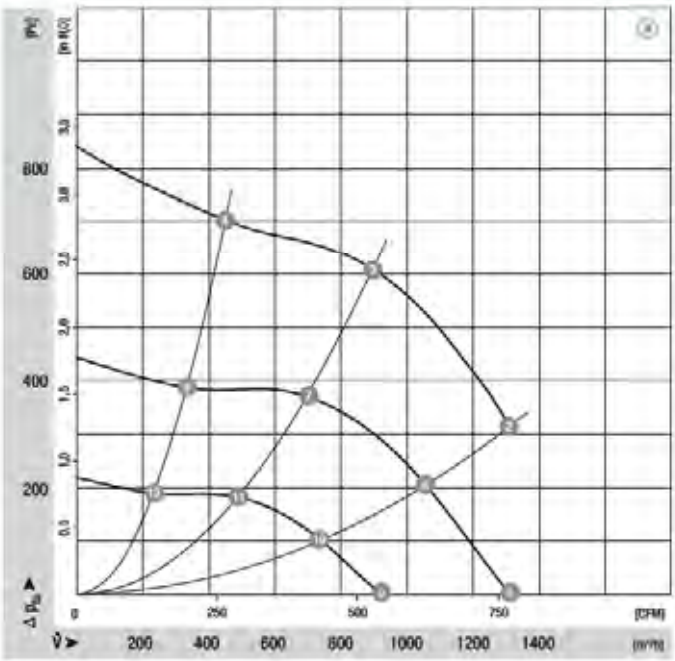

	n [rpm]	P_1 [W]	I [A]	Lp_A [dB(A)]	η_{fL} [%]
Ⓐ ❶	—	—	—	—	—
Ⓐ ❷	2450	510	3.15	79	47
Ⓐ ❸	2570	361	2.25	75	58
Ⓐ ❹	2690	223	1.45	73	45
Ⓐ ❺	2000	395	2.50	77	—
Ⓐ ❻	2000	295	1.90	73	47
Ⓐ ❼	2000	185	1.20	68	58
Ⓐ ❽	2000	100	0.60	64	45
Ⓐ ❾	1400	135	0.90	67	—
Ⓐ ❿	1400	100	0.60	64	47
Ⓐ ⓫	1400	65	0.40	59	58
Ⓐ ⓬	1400	35	0.20	55	45

ebmpapst

- **Technical features:**
  - PFC (passive)
  - Control input 0-10 VDC / PWM
  - Output 10 VDC max. 1.1 mA
  - Alarm relay
  - Over-temperature protected electronics / motor
- **EMC:** Interference emission acc. to EN 61000-6-3
  Interference immunity acc. to EN 61000-6-2
  Harmonics acc. to DIN EN 61000-3-2/3
- **Leakage current:** < 3.5 mA acc. to EN 61800-5-1
- **Cable exit:** Variable
- **Protection class:** I
- **Product conforming to standards:** EN 61800-5-1, CE
- **Approvals:** UL, CSA; CCC, GOST are applied for

Centrifugal fan	Mass of centrifugal fan kg	Centrifugal blower without flange	Mass of centrifugal blower kg
R3G 180-AD43 -71	4.7	G3G 180-AD43 -71	6.8

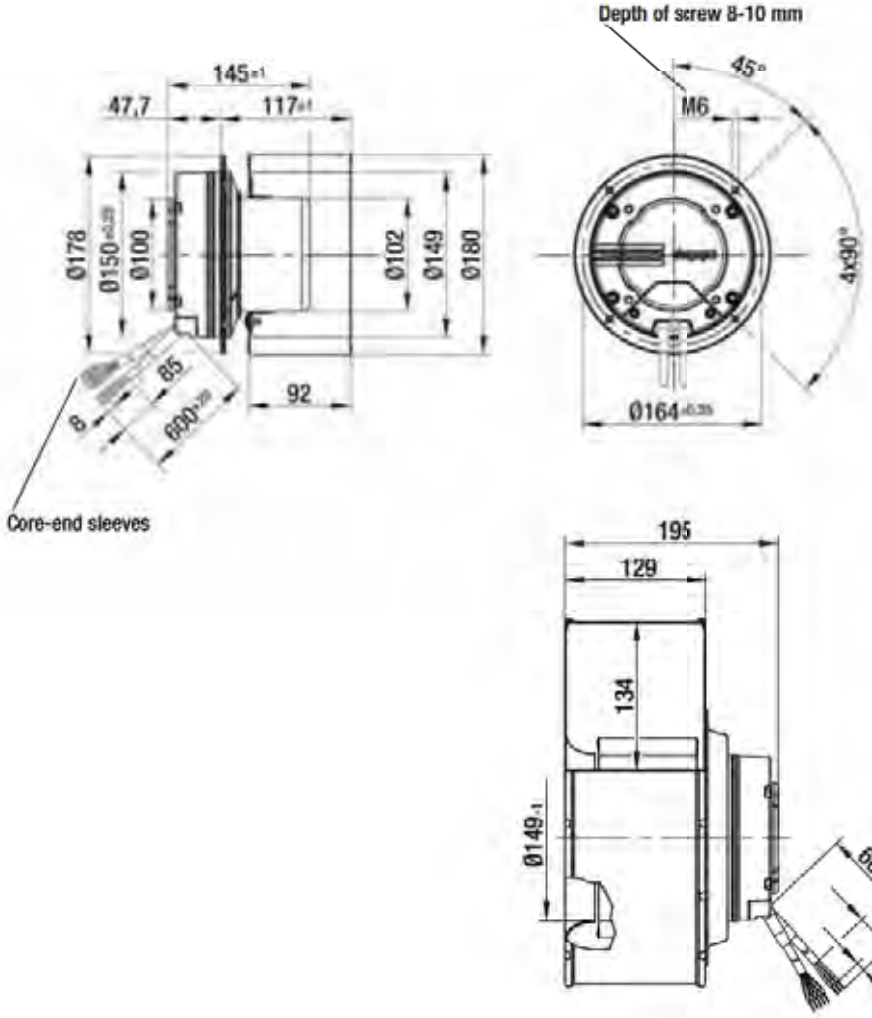

EC centrifugal fan and blowers

single inlet, Ø 200

- **Material:** Housing: Galvanised sheet steel
  Impeller: Galvanised sheet steel
  Rotor: Coated in black
  Electronics enclosure: Die-cast aluminium
- **Direction of rotation:** Clockwise, seen on rotor
- **Type of protection:** IP 54
- **Insulation class:** "B"
- **Mounting position:** Shaft horizontal or rotor on top; rotor on bottom on request
- **Condensate discharges:** None
- **Mode of operation:** Continuous operation (S1)
- **Bearings:** Maintenance-free ball bearings

Nominal data		Curve	Nominal voltage range	Frequency	Speed/rpm	Max. power input (1)	Max. current draw (1)	Min. back pressure	Perm. amb. temp.	Electr. connection
Type	**Motor**		**VAC**	**Hz**	**rpm**	**W**	**A**	**Pa**	**°C**	p. 605
***3G 200**	M3G 084-FA	Ⓐ	1~ 100-130	50/60	1720	350	4.20	150	-25 to +60	K1)

subject to alterations

(1) Nominal data in operating point with maximum load and 115 VAC

Curves

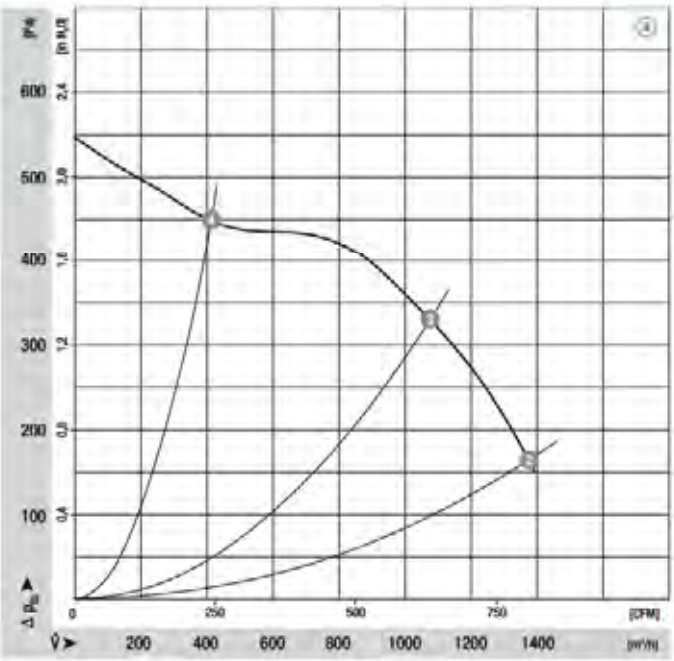

	n [rpm]	P_1 [W]	I [A]	Lp_A [dB(A)]	η_{fl} [%]
Ⓐ ❶	—	—	—	—	—
Ⓐ ❷	1720	350	4.10	73	49
Ⓐ ❸	1780	277	3.40	71	58
Ⓐ ❹	1945	152	2.10	69	50

ebmpapst

- **Technical features:**
  - PFC (passive)
  - Control input 0-10 VDC / PWM
  - Output 10 VDC max. 1.1 mA
  - Alarm relay
  - Over-temperature protected electronics / motor
- **EMC:** Interference emission acc. to EN 61000-6-3
  Interference immunity acc. to EN 61000-6-2
  Harmonics acc. to DIN EN 61000-3-2/3
- **Leakage current:** < 3.5 mA acc. to EN 61800-5-1
- **Cable exit:** Variable
- **Protection class:** I
- **Product conforming to standards:** EN 61800-5-1, CE
- **Approvals:** UL, CSA, CCC, GOST are applied for

Centrifugal fan	Mass of centrifugal fan kg	Centrifugal blower without flange	Mass of centrifugal blower kg
R3G 200-AL36 -81	5.2	G3G 200-AL36 -81	7.4

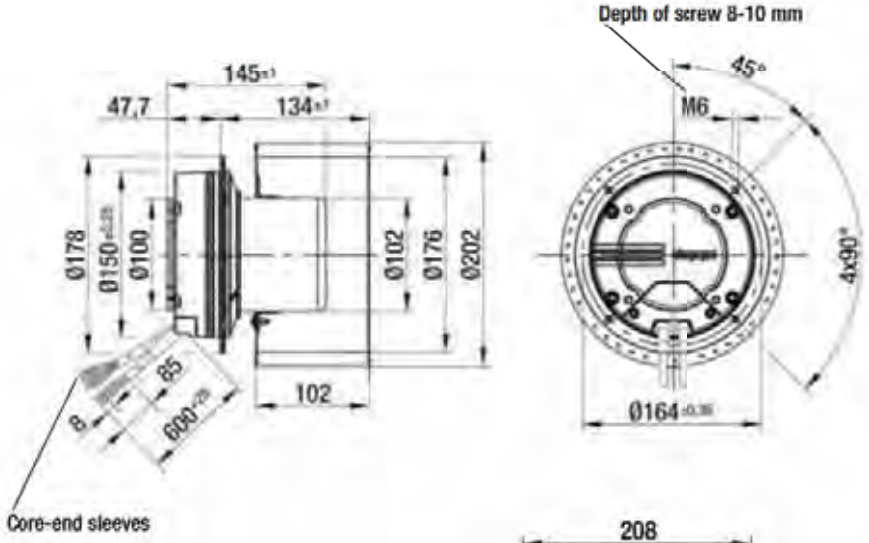

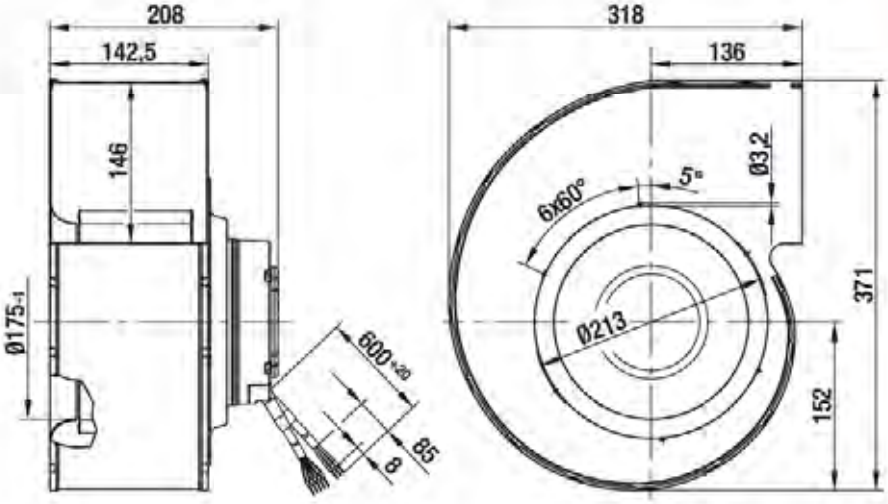

EC centrifugal fan and blowers

single inlet, Ø 200

- **Material:** Housing: Galvanised sheet steel
  Impeller: Galvanised sheet steel
  Rotor: Coated in black
  Electronics enclosure: Die-cast aluminium
- **Direction of rotation:** Clockwise, seen on rotor
- **Type of protection:** IP 54
- **Insulation class:** "B"
- **Mounting position:** Shaft horizontal or rotor on top; rotor on bottom on request
- **Condensate discharges:** None
- **Mode of operation:** Continuous operation (S1)
- **Bearings:** Maintenance-free ball bearings

Nominal data		Curve	Nominal voltage range	Frequency	Speed/rpm	Max. power input (1)	Max. current draw (1)	Min. back pressure	Perm. amb. temp.	Electr. connection
Type	**Motor**		**VAC**	**Hz**	**rpm**	**W**	**A**	**Pa**	**°C**	p. 605
***3G 200**	M3G 084-FA	Ⓐ	1~ 200-277	50/60	1890	510	3.10	150	-25 to +60	K1)

subject to alterations

(1) Nominal data in operating point with maximum load and 230 VAC

Curves

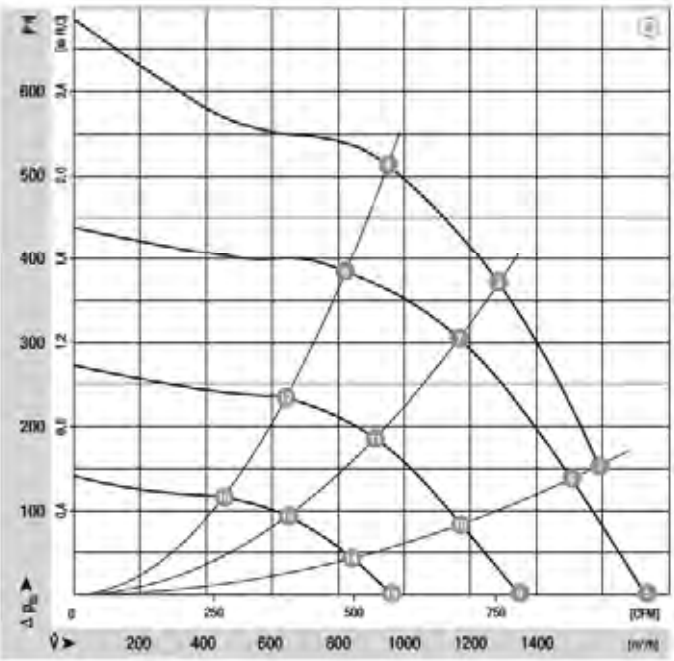

	n [rpm]	P_1 [W]	I [A]	Lp_A [dB(A)]	η_{tt} [%]
Ⓐ ❶	—	—	—	—	—
Ⓐ ❷	1890	490	3.00	76	46
Ⓐ ❸	1960	403	2.40	74	57
Ⓐ ❹	2050	322	2.00	73	58
Ⓐ ❺	1800	510	3.10	77	—
Ⓐ ❻	1800	420	2.50	75	46
Ⓐ ❼	1800	320	1.90	71	57
Ⓐ ❽	1800	220	1.30	69	58
Ⓐ ❾	1400	240	1.50	71	—
Ⓐ ❿	1400	200	1.20	68	46
Ⓐ ⓫	1400	145	0.90	65	57
Ⓐ ⓬	1400	103	0.70	63	58
Ⓐ ⓭	1000	87	0.60	63	—
Ⓐ ⓮	1000	72	0.50	60	46
Ⓐ ⓯	1000	55	0.40	57	57
Ⓐ ⓰	1000	38	0.30	53	58

ebmpapst

- **Technical features:**
  - PFC (passive)
  - Control input 0-10 VDC / PWM
  - Output 10 VDC max. 1.1 mA
  - Alarm relay
  - Over-temperature protected electronics / motor
- **EMC:** Interference emission acc. to EN 61000-6-3
  Interference immunity acc. to EN 61000-6-2
  Harmonics acc. to DIN EN 61000-3-2/3
- **Leakage current:** < 3.5 mA acc. to EN 61800-5-1
- **Cable exit:** Variable
- **Protection class:** I
- **Product conforming to standards:** EN 61800-5-1, CE
- **Approvals:** UL, CSA; CCC, GOST are applied for

Centrifugal fan	Mass of centrifugal fan kg	Centrifugal blower without flange	Mass of centrifugal blower kg
R3G 200-AL29 -71	5.2	G3G 200-AL29 -71	7.4

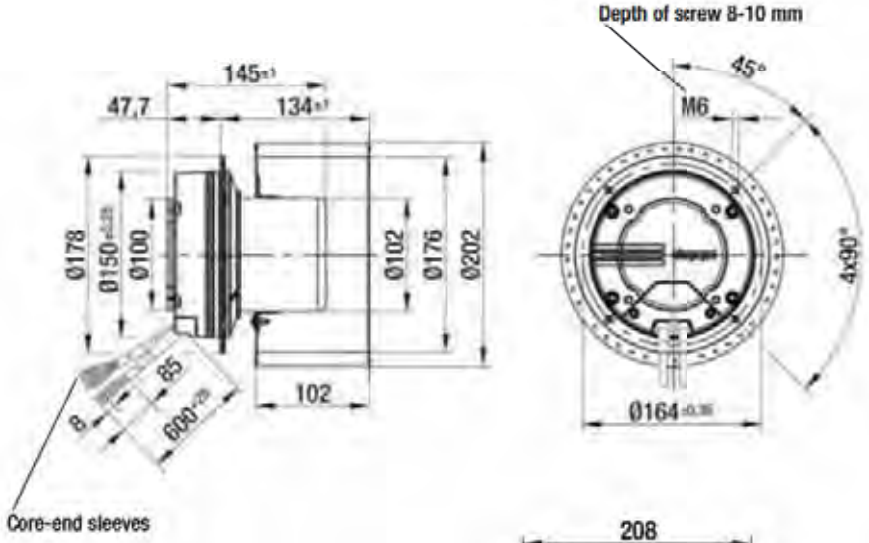

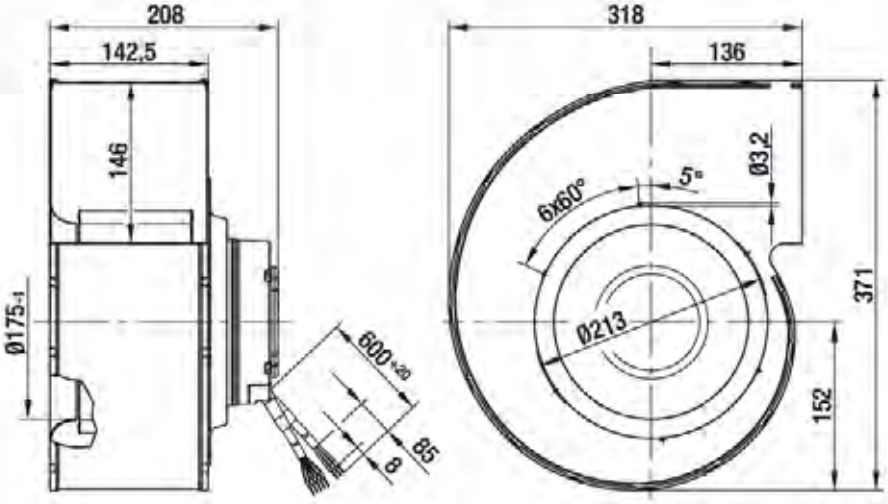

EC centrifugal fan and blowers

single inlet, Ø 225

- **Material:** Housing: Galvanised sheet steel
  Impeller: Galvanised sheet steel
  Rotor: Coated in black
  Electronics enclosure: Die-cast aluminium
- **Direction of rotation:** Clockwise, seen on rotor
- **Type of protection:** IP 54
- **Insulation class:** "B"
- **Mounting position:** Shaft horizontal or rotor on top; rotor on bottom on request
- **Condensate discharges:** None
- **Mode of operation:** Continuous operation (S1)
- **Bearings:** Maintenance-free ball bearings

Nominal data		Curve	Nominal voltage range	Frequency	Speed/rpm	Max. power input (1)	Max. current draw (1)	Min. back pressure	Perm. amb. temp.	Electr. connection
Type	**Motor**		**VAC**	**Hz**	**rpm**	**W**	**A**	**Pa**	**°C**	p. 605
***3G 225**	M3G 084-FA	Ⓐ	1~ 100-130	50/60	1500	350	4.30	150	-25 to +60	K1)

subject to alterations

(1) Nominal data in operating point with maximum load and 115 VAC

Curves

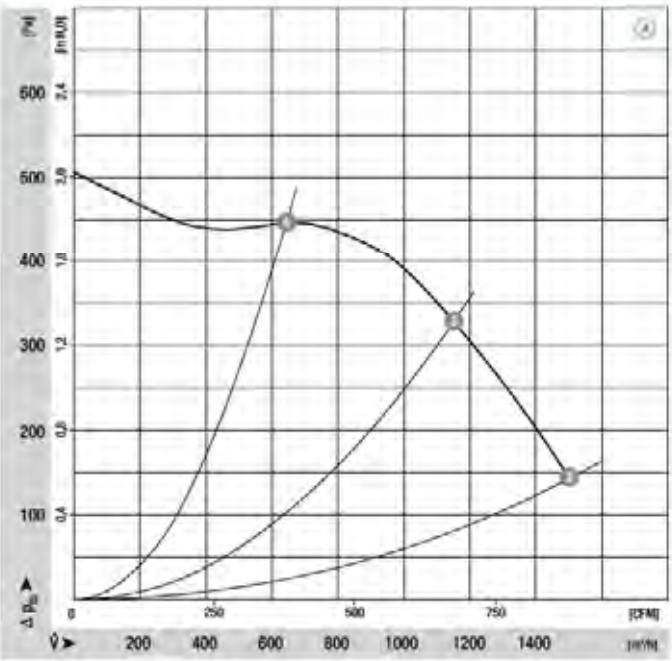

	n [rpm]	P_1 [W]	I [A]	Lp_A [dB(A)]	η_{tt} [%]
Ⓐ ❶	—	—	—	—	—
Ⓐ ❷	1500	350	4.30	72	48
Ⓐ ❸	1620	300	3.60	69	60
Ⓐ ❹	1775	205	2.70	68	56

ebmpapst

- **Technical features:**
  - PFC (passive)
  - Control input 0-10 VDC / PWM
  - Output 10 VDC max. 1.1 mA
  - Alarm relay
  - Over-temperature protected electronics / motor
- **EMC:** Interference emission acc. to EN 61000-6-3
  Interference immunity acc. to EN 61000-6-2
  Harmonics acc. to DIN EN 61000-3-2/3
- **Leakage current:** < 3.5 mA acc. to EN 61800-5-1
- **Cable exit:** Variable
- **Protection class:** I
- **Product conforming to standards:** EN 61800-5-1, CE
- **Approvals:** UL, CSA, CCC, GOST are applied for

Centrifugal fan	Mass of centrifugal fan kg	Centrifugal blower without flange	Mass of centrifugal blower kg
R3G 225-AL36 -81	5.3	G3G 225-AL36 -81	7.5

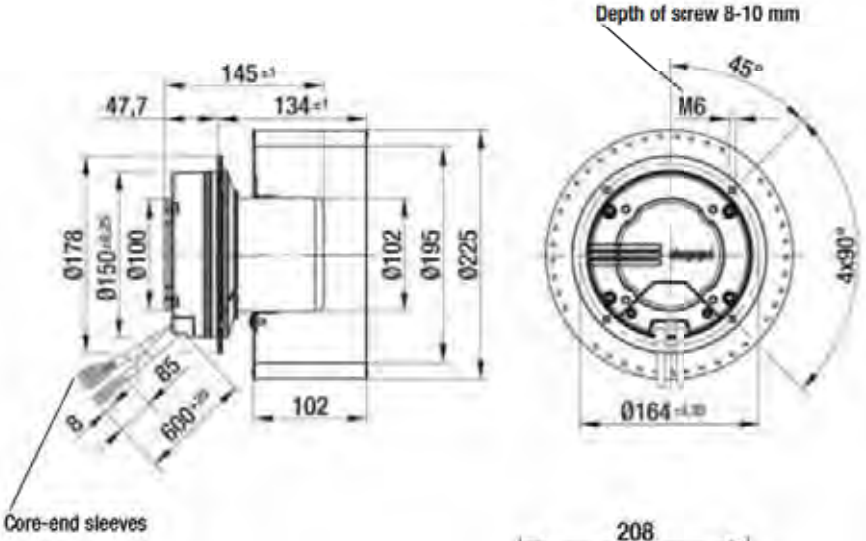

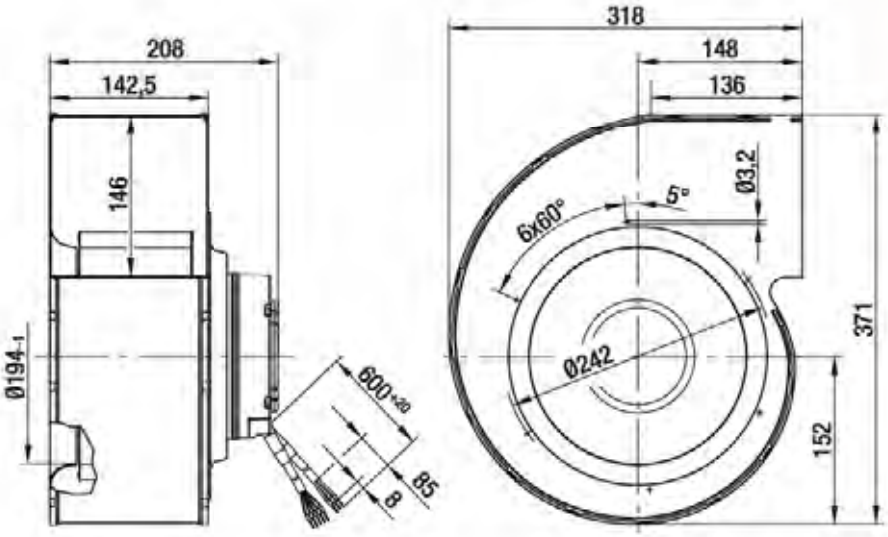

EC centrifugal fan and blowers

single inlet, Ø 225

- **Material:** Housing: Galvanised sheet steel
  Impeller: Galvanised sheet steel
  Rotor: Coated in black
  Electronics enclosure: Die-cast aluminium
- **Direction of rotation:** Clockwise, seen on rotor
- **Type of protection:** IP 54
- **Insulation class:** "B"
- **Mounting position:** Shaft horizontal or rotor on top; rotor on bottom on request
- **Condensate discharges:** None
- **Mode of operation:** Continuous operation (S1)
- **Bearings:** Maintenance-free ball bearings

Nominal data		Curve	Nominal voltage range	Frequency	Speed/rpm	Max. power input (1)	Max. current draw (1)	Min. back pressure	Perm. amb. temp.	Electr. connection
Type	**Motor**		**VAC**	**Hz**	**rpm**	**W**	**A**	**Pa**	**°C**	p. 605
***3G 225**	M3G 084-FA	Ⓐ	1~ 200-277	50/60	1815	545	3.50	300	-25 to +60	K1)

subject to alterations

(1) Nominal data in operating point with maximum load and 230 VAC

Curves

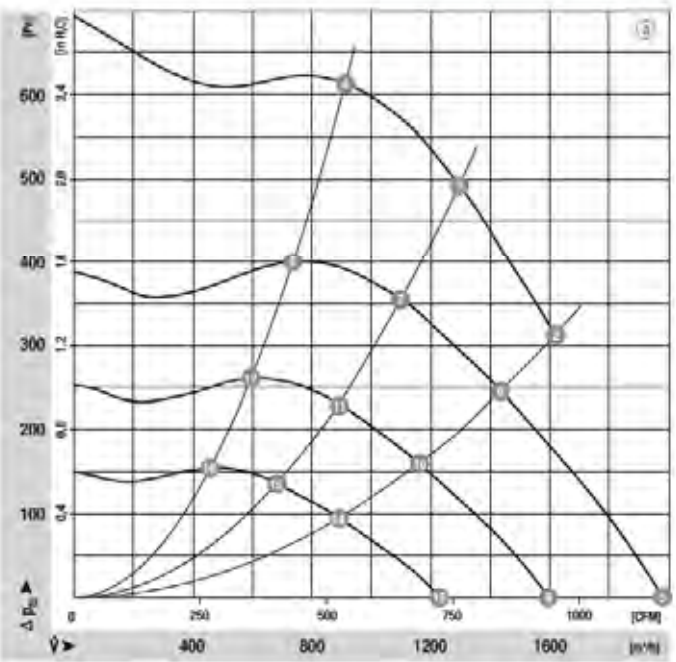

	n [rpm]	P_1 [W]	I [A]	Lp_A [dB(A)]	η_{tt} [%]
Ⓐ ❶	—	—	—	—	—
Ⓐ ❷	1815	545	3.50	75	53
Ⓐ ❸	1900	456	2.90	74	60
Ⓐ ❹	1995	363	2.35	73	59
Ⓐ ❺	1610	592	3.85	76	—
Ⓐ ❻	1610	381	2.45	71	53
Ⓐ ❼	1610	278	1.80	69	60
Ⓐ ❽	1610	191	1.25	66	59
Ⓐ ❾	1300	312	2.05	72	—
Ⓐ ❿	1300	200	1.30	66	53
Ⓐ ⓫	1300	146	0.95	63	60
Ⓐ ⓬	1300	101	0.65	61	59
Ⓐ ⓭	1000	142	0.95	65	—
Ⓐ ⓮	1000	91	0.60	59	53
Ⓐ ⓯	1000	67	0.45	56	60
Ⓐ ⓰	1000	46	0.30	54	59

- **Technical features:**
  - PFC (passive)
  - Control input 0-10 VDC / PWM
  - Output 10 VDC max. 1.1 mA
  - Alarm relay
  - Over-temperature protected electronics / motor
- **EMC:** Interference emission acc. to EN 61000-6-3
  Interference immunity acc. to EN 61000-6-2
  Harmonics acc. to DIN EN 61000-3-2/3
- **Leakage current:** < 3.5 mA acc. to EN 61800-5-1
- **Cable exit:** Variable
- **Protection class:** I
- **Product conforming to standards:** EN 61800-5-1, CE
- **Approvals:** UL, CSA, CCC, GOST are applied for

Centrifugal fan	Mass of centrifugal fan kg	Centrifugal blower without flange	Mass of centrifugal blower kg
R3G 225-AD29 -71	5.3	G3G 225-AD29 -71	7.5

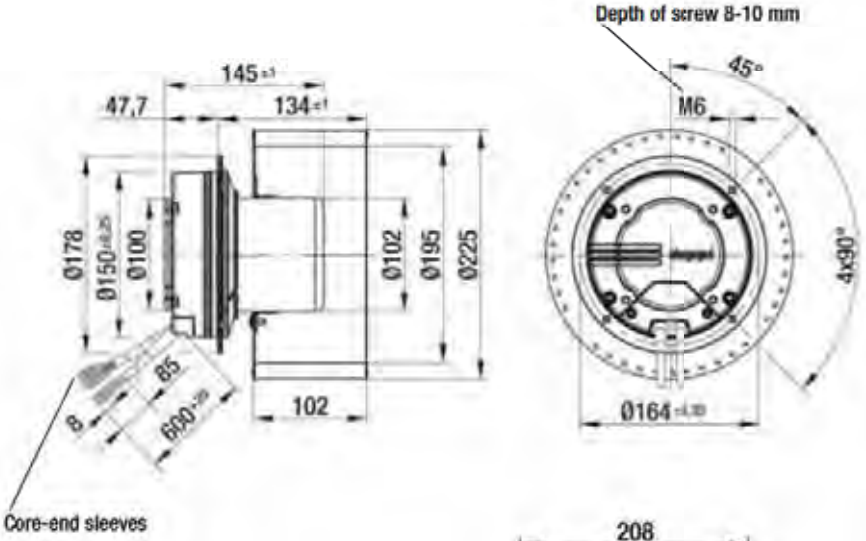

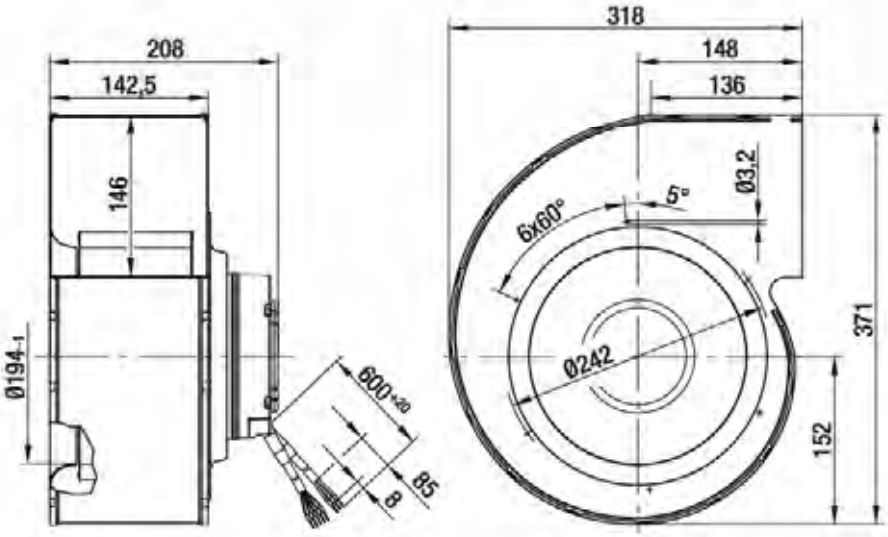

EC centrifugal fan

single inlet, Ø 250

- **Material:** Impeller: Galvanised sheet steel
  Rotor: Coated in black
  Electronics enclosure: Die-cast aluminium
- **Direction of rotation:** Clockwise, seen on rotor
- **Type of protection:** IP 54
- **Insulation class:** "B"
- **Mounting position:** Shaft horizontal or rotor on top; rotor on bottom on request
- **Condensate discharges:** None
- **Mode of operation:** Continuous operation (S1)
- **Bearings:** Maintenance-free ball bearings

Nominal data		Curve	Nominal voltage range	Frequency	Speed/rpm	Max. power input (1)	Max. current draw (1)	Min. back pressure	Perm. amb. temp.	Electr. connection
Type	**Motor**		**VAC**	**Hz**	**rpm**	**W**	**A**	**Pa**	**°C**	p. 605
R3G 250	M3G 084-FA	Ⓐ	1~ 200-277	50/60	1230	450	2.90	180	-25 to +45	K1)

subject to alterations

(1) Nominal data in operating point with maximum load and 230 VAC

Curves

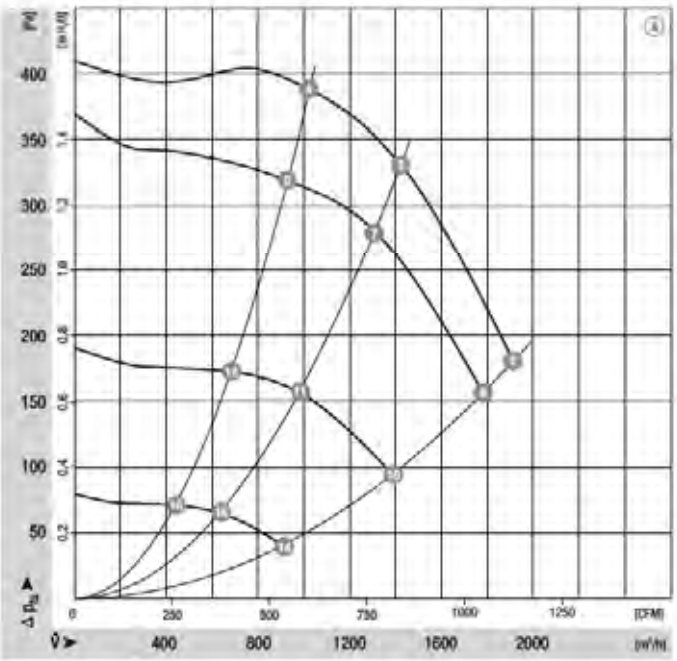

		n [rpm]	P_1 [W]	I [A]	Lp_A [dB(A)]	η_{tt} [%]
Ⓐ	1	—	—	—	—	—
Ⓐ	2	1230	450	2.90	72	50
Ⓐ	3	1370	338	2.20	70	60
Ⓐ	4	1460	266	1.70	68	56
Ⓐ	5	—	—	—	—	—
Ⓐ	6	1160	357	2.30	71	50
Ⓐ	7	1270	269	1.70	67	60
Ⓐ	8	1320	195	1.30	66	56
Ⓐ	9	—	—	—	—	—
Ⓐ	10	900	166	1.10	64	50
Ⓐ	11	960	118	0.80	60	60
Ⓐ	12	990	87	0.60	58	56
Ⓐ	13	—	—	—	—	—
Ⓐ	14	600	54	0.40	53	50
Ⓐ	15	630	37	0.30	48	60
Ⓐ	16	640	31	0.20	46	56

ebmpapst

- **Technical features:**
  - PFC (passive)
  - Control input 0-10 VDC / PWM
  - Output 10 VDC max. 1.1 mA
  - Alarm relay
  - Over-temperature protected electronics / motor
- **EMC:** Interference emission acc. to EN 61000-6-3
  Interference immunity acc. to EN 61000-6-2
  Harmonics acc. to DIN EN 61000-3-2/3
- **Leakage current:** < 3.5 mA acc. to EN 61800-5-1
- **Cable exit:** Variable
- **Protection class:** I
- **Product conforming to standards:** EN 61800-5-1, CE
- **Approvals:** UL, CSA, GOST; CCC is applied for

Centrifugal fan	Mass of centrifugal fan kg	Inlet nozzle	Flange
R3G 250-AQ28 -71	5.6	25010-2-4013	10011-2-4017

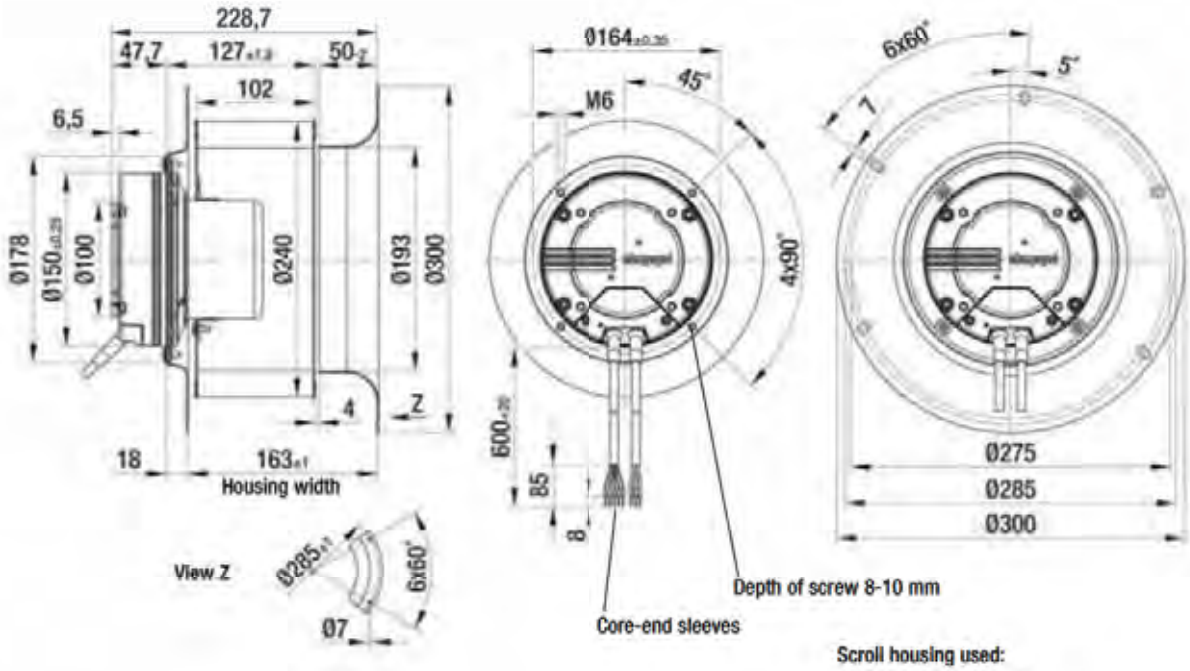

Scroll housing used:

EC centrifugal fan

single inlet, Ø 250

- **Material:** Impeller: Galvanised sheet steel
  Rotor: Coated in black
  Electronics enclosure: Die-cast aluminium
- **Direction of rotation:** Clockwise, seen on rotor
- **Type of protection:** IP 54 (acc. to EN 60529)
- **Insulation class:** "F"
- **Mounting position:** Shaft horizontal or rotor on bottom; rotor on top on request
- **Condensate discharges:** Rotor-side
- **Mode of operation:** Continuous operation (S1)
- **Bearings:** Maintenance-free ball bearings

Nominal data		Curve	Nominal voltage range	Frequency	Speed/rpm	Max. power input (1)	Max. current draw (1)	Min. back pressure	Perm. amb. temp.	Electr. connection
Type	**Motor**		**VAC**	**Hz**	**rpm**	**kW**	**A**	**Pa**	**°C**	p. 607
R3G 250	M3G 112-EA	Ⓐ	1~ 200-277	50/60	1320	0.76	3.30	0	-25 to +60	L1)

subject to alterations

(1) Nominal data in operating point with maximum load and 230 VAC

Curves

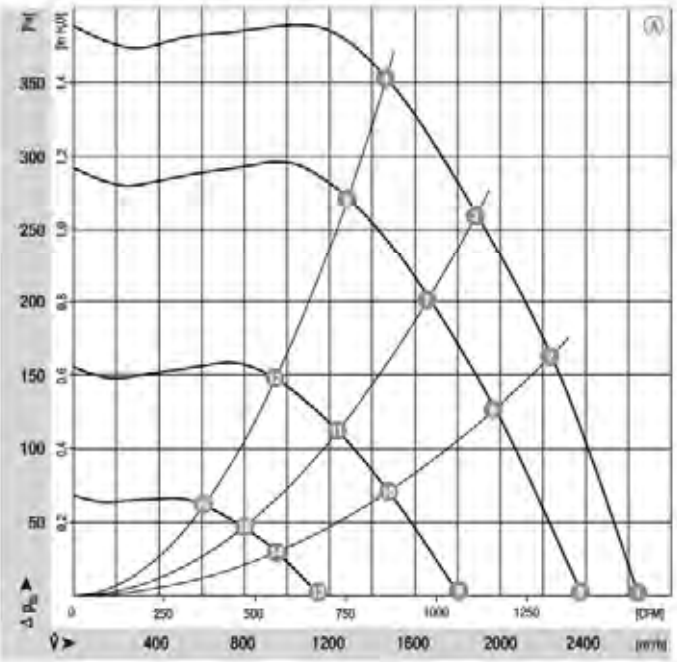

	n [rpm]	P_1 [kW]	I [A]	Lp_A [dB(A)]	η_{fl} [%]
Ⓐ ❶	1320	0.76	3.30	81	—
Ⓐ ❷	1380	0.61	2.70	78	46
Ⓐ ❸	1410	0.51	2.30	76	50
Ⓐ ❹	1450	0.39	1.70	73	53
Ⓐ ❺	1190	0.55	2.40	78	—
Ⓐ ❻	1220	0.43	1.90	75	46
Ⓐ ❼	1250	0.36	1.60	73	50
Ⓐ ❽	1280	0.28	1.20	69	53
Ⓐ ❾	910	0.25	1.10	71	—
Ⓐ ❿	930	0.20	0.90	67	46
Ⓐ ⓫	940	0.16	0.70	65	50
Ⓐ ⓬	950	0.13	0.60	61	53
Ⓐ ⓭	610	0.09	0.40	59	—
Ⓐ ⓮	610	0.07	0.40	55	46
Ⓐ ⓯	620	0.06	0.30	53	50
Ⓐ ⓰	630	0.05	0.30	49	53

- **Technical features:**
  - PFC (active)
  - Integrated PID controller
  - Control input 0-10 VDC / PWM
  - Input for sensor 0-10 V or 4-20 mA
  - Slave output 0-10 V max. 3 mA
  - Output 20 VDC (±20 %) max. 50 mA
  - Output 10 VDC (+10 %) max. 10 mA
  - RS485 ebmBUS
  - Alarm relay
  - Line undervoltage detection
  - Motor current limitation
  - Electronics / motor overtemperature protection
  - Locked-rotor protection
  - Soft start
- **EMC:** Interference emission acc. to EN 61000-6-4 (industrial environment)
  Interference immunity acc. to EN 61000-6-2 (industrial environment)
  Harmonics acc. to DIN EN 61000-3-2/3
- **Leakage current:** < 3.5 mA acc. to EN 61800-5-1
- **Connection leads:** Via terminal strip
- **Protection class:** I (acc. to EN 610800-5-1)
- **Product conforming to standard:** CE
- **Approvals:** UL, CSA, GOST, CCC are applied for

Centrifugal fan	Mass of centrifugal fan kg	Inlet nozzle	Flange
R3G 250-AS51 -11	7.6	25010-2-4013	10025-2-4017

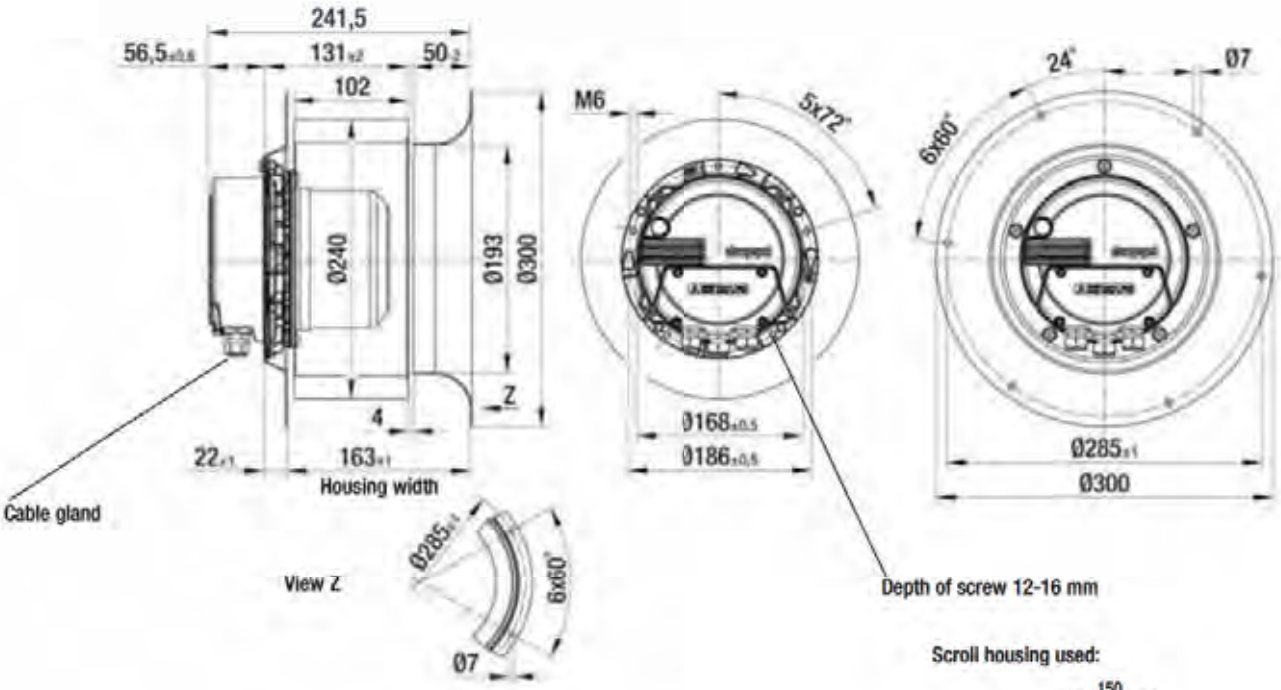

Scroll housing used:

EC centrifugal fan

single inlet, Ø 280

- **Material:** Impeller: Galvanised sheet steel
  Rotor: Coated in black
  Electronics enclosure: Die-cast aluminium
- **Direction of rotation:** Clockwise, seen on rotor
- **Type of protection:** IP 54 (acc. to EN 60529)
- **Insulation class:** "F"
- **Mounting position:** Shaft horizontal or rotor on bottom; rotor on top on request
- **Condensate discharges:** Rotor-side
- **Mode of operation:** Continuous operation (S1)
- **Bearings:** Maintenance-free ball bearings

Nominal data		Curve	Nominal voltage range	Frequency	Speed/rpm	Max. power input (1)	Max. current draw (1)	Min. back pressure	Perm. amb. temp.	Electr. connection
Type	**Motor**		**VAC**	**Hz**	**rpm**	**kW**	**A**	**Pa**	**°C**	p. 607
R3G 280	M3G 112-GA	Ⓐ	1~ 200-277	50/60	1130	0.75	3.30	0	-25 to +50	L1)

subject to alterations

(1) Nominal data in operating point with maximum load and 230 VAC

Curves

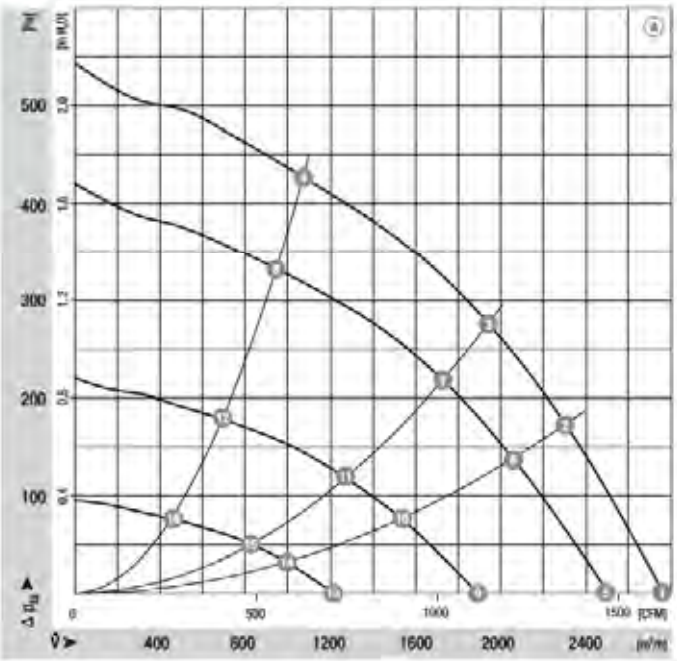

	n [rpm]	P_1 [kW]	I [A]	Lp_A [dB(A)]	η_{tt} [%]
Ⓐ ❶	1130	0.75	3.30	78	—
Ⓐ ❷	1170	0.60	2.70	75	53
Ⓐ ❸	1210	0.53	2.30	73	54
Ⓐ ❹	1250	0.32	1.40	69	51
Ⓐ ❺	1020	0.56	2.50	76	—
Ⓐ ❻	1050	0.44	2.00	72	53
Ⓐ ❼	1070	0.37	1.60	70	54
Ⓐ ❽	1110	0.23	1.00	65	51
Ⓐ ❾	780	0.25	1.10	69	—
Ⓐ ❿	790	0.20	0.90	65	53
Ⓐ ⓫	800	0.17	0.80	63	54
Ⓐ ⓬	820	0.11	0.50	58	51
Ⓐ ⓭	520	0.09	0.40	58	—
Ⓐ ⓮	530	0.08	0.40	54	53
Ⓐ ⓯	530	0.07	0.30	51	54
Ⓐ ⓰	550	0.05	0.30	46	51

ebmpapst

- **Technical features:**
  - PFC (active)
  - Integrated PID controller
  - Control input 0-10 VDC / PWM
  - Input for sensor 0-10 V or 4-20 mA
  - Slave output 0-10 V max. 3 mA
  - Output 20 VDC (±20 %) max. 50 mA
  - Output 10 VDC (+10 %) max. 10 mA
  - RS485 ebmBUS
  - Alarm relay
  - Line undervoltage detection
  - Motor current limitation
  - Electronics / motor overtemperature protection
  - Locked-rotor protection
  - Soft start
- **EMC:** Interference emission acc. to EN 61000-6-4 (industrial environment)
  Interference immunity acc. to EN 61000-6-2 (industrial environment)
  Harmonics acc. to DIN EN 61000-3-2/3
- **Leakage current:** < 3.5 mA acc. to EN 61800-5-1
- **Connection leads:** Via terminal strip
- **Protection class:** I (acc. to EN 610800-5-1)
- **Product conforming to standard:** CE
- **Approvals:** VDE, UL, CSA, GOST, CCC are applied for

Centrifugal fan	Mass of centrifugal fan kg	Inlet nozzle	Flange
R3G 280-AN32 -11	9.4	28010-2-4013	10026-2-4017

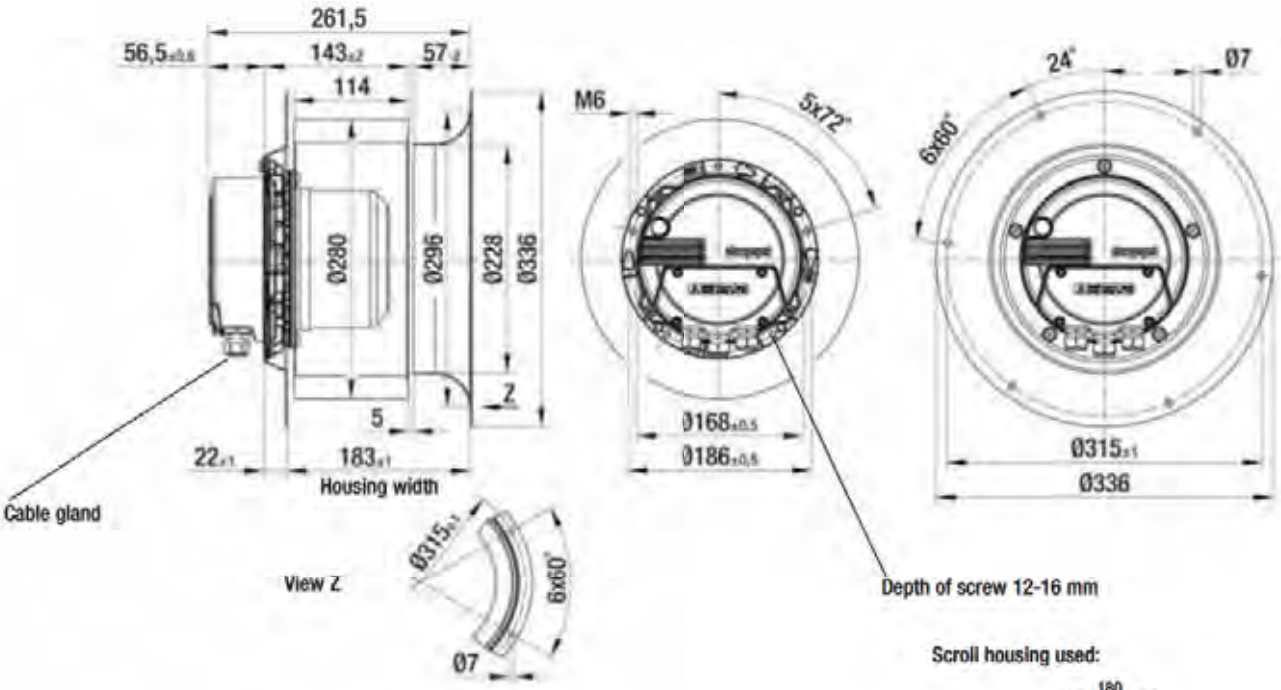

Scroll housing used:

EC centrifugal fan

single inlet, Ø 280

- **Material:** Impeller: Galvanised sheet steel
  Rotor: Coated in black
  Electronics enclosure: Die-cast aluminium
- **Direction of rotation:** Clockwise, seen on rotor
- **Type of protection:** IP 54 (acc. to EN 60529)
- **Insulation class:** "F"
- **Mounting position:** Shaft horizontal or rotor on bottom; rotor on top on request
- **Condensate discharges:** Rotor-side
- **Mode of operation:** Continuous operation (S1)
- **Bearings:** Maintenance-free ball bearings

Nominal data		Curve	Nominal voltage range	Frequency	Speed/rpm	Max. power input (1)	Max. current draw (1)	Min. back pressure	Perm. amb. temp.	Electr. connection
Type	**Motor**		**VAC**	**Hz**	**rpm**	**kW**	**A**	**Pa**	**°C**	p. 607
R3G 280	M3G 112-GA	Ⓐ	3~ 380-480	50/60	1300	1.10	2.00	0	-25 to +50	L2)

subject to alterations

(1) Nominal data in operating point with maximum load and 400 VAC

Curves

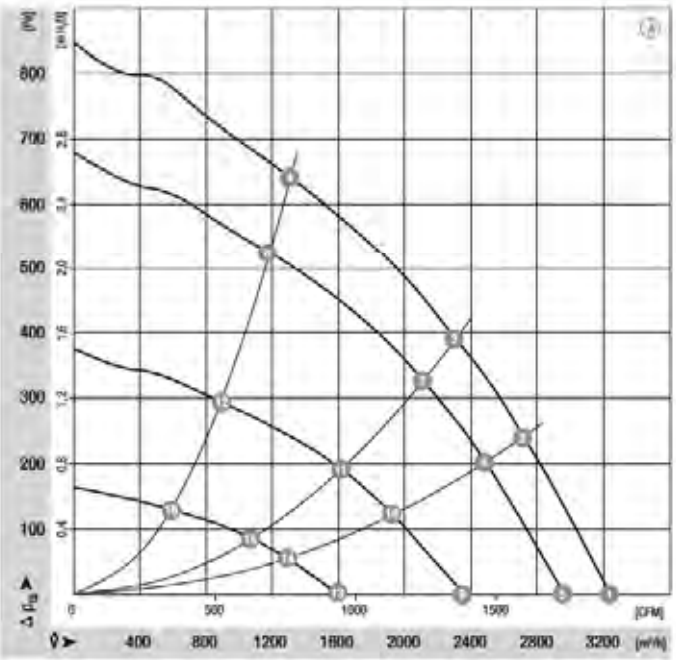

	n [rpm]	P_1 [kW]	I [A]	Lp_A [dB(A)]	η_{tt} [%]
Ⓐ ❶	1300	1.10	2.00	82	—
Ⓐ ❷	1370	0.94	1.80	79	55
Ⓐ ❸	1420	0.81	1.50	77	59
Ⓐ ❹	1540	0.53	1.00	73	57
Ⓐ ❺	1200	0.87	1.60	79	—
Ⓐ ❻	1260	0.73	1.40	76	55
Ⓐ ❼	1310	0.62	1.20	75	59
Ⓐ ❽	1400	0.40	0.80	71	57
Ⓐ ❾	970	0.46	0.90	74	—
Ⓐ ❿	990	0.36	0.80	70	55
Ⓐ ⓫	1010	0.30	0.60	68	59
Ⓐ ⓬	1050	0.19	0.50	63	57
Ⓐ ⓭	660	0.16	0.40	64	—
Ⓐ ⓮	680	0.13	0.30	60	55
Ⓐ ⓯	680	0.11	0.30	58	59
Ⓐ ⓰	710	0.08	0.20	53	57

ebmpapst

- **Technical features:**
  - PFC (passive)
  - Integrated PID controller
  - Control input 0-10 VDC / PWM
  - Input for sensor 0-10 V or 4-20 mA
  - Slave output 0-10 V max. 3 mA
  - Output 20 VDC (±20 %) max. 50 mA
  - Output 10 VDC (+10 %) max. 10 mA
  - RS485 ebmBUS
  - Alarm relay
  - Line undervoltage / phase failure detection
  - Motor current limitation
  - Electronics / motor overtemperature protection
  - Locked-rotor protection
  - Soft start
- **EMC:** Interference emission acc. to EN 61000-6-3
  Interference immunity acc. to EN 61000-6-2
  Harmonics acc. to DIN EN 61000-3-2/3
- **Leakage current:** < 3.5 mA acc. to EN 61800-5-1
- **Connection leads:** Via terminal strip
- **Protection class:** I (acc. to EN 610800-5-1)
- **Product conforming to standard:** CE
- **Approvals:** VDE, UL, CSA, GOST, CCC are applied for

Centrifugal fan	Mass of centrifugal fan kg	Inlet nozzle	Flange
R3G 280-AN32 -01	9.4	28010-2-4013	10026-2-4017

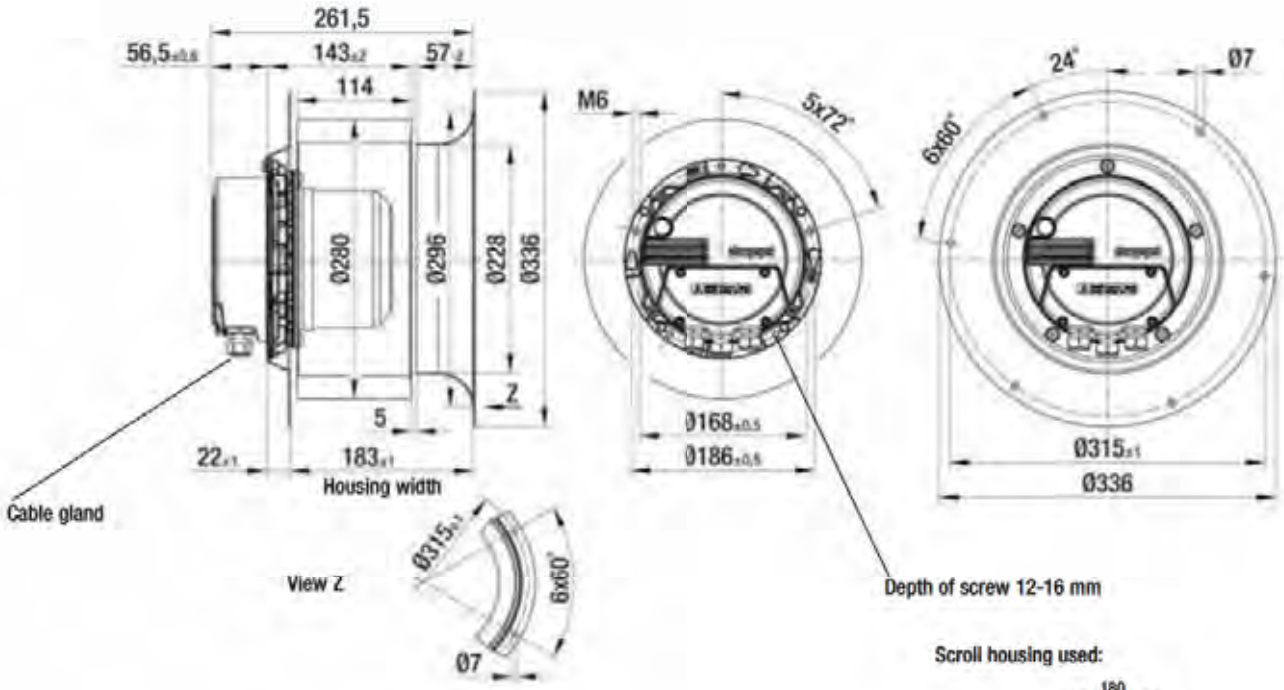

Scroll housing used:

EC centrifugal fan

single inlet, Ø 310

- **Material:** Impeller: Galvanised sheet steel
  Rotor: Coated in black
  Electronics enclosure: Die-cast aluminium
- **Direction of rotation:** Clockwise, seen on rotor
- **Type of protection:** IP 54 (acc. to EN 60529)
- **Insulation class:** "F"
- **Mounting position:** Shaft horizontal or rotor on bottom; rotor on top on request
- **Condensate discharges:** Rotor-side
- **Mode of operation:** Continuous operation (S1)
- **Bearings:** Maintenance-free ball bearings

Nominal data		Curve	Nominal voltage range	Frequency	Speed/rpm	Max. power input (1)	Max. current draw (1)	Min. back pressure	Perm. amb. temp.	Electr. connection
Type	**Motor**		**VAC**	**Hz**	**rpm**	**kW**	**A**	**Pa**	**°C**	p. 608
R3G 310	M3G 150-FF	Ⓐ	3~ 380-480	50/60	1500	2.97	4.60	200	-25 to +45	M)

subject to alterations

(1) Nominal data in operating point with maximum load and 400 VAC

Curves

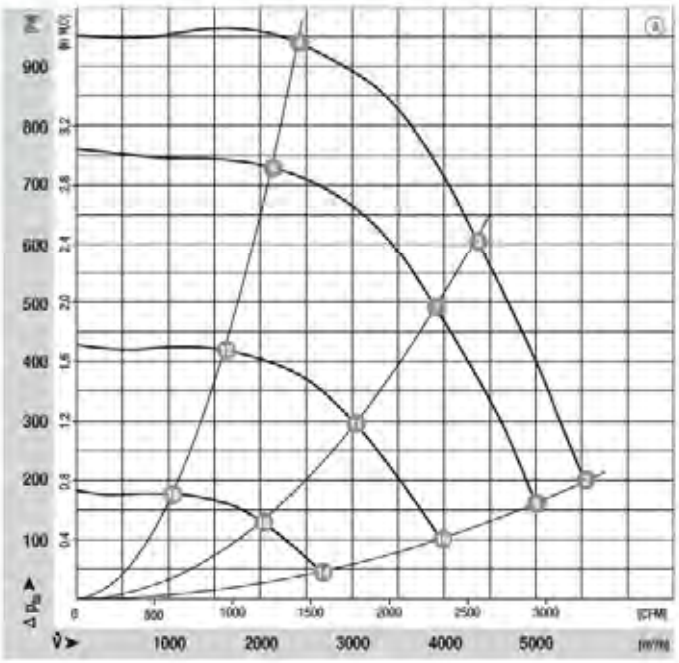

	n [rpm]	P_1 [kW]	I [A]	Lp_A [dB(A)]	η_{tt} [%]
Ⓐ ❶	—	—	—	—	—
Ⓐ ❷	1500	2.97	4.60	88	47
Ⓐ ❸	1600	2.34	3.70	85	57
Ⓐ ❹	1730	1.37	2.10	82	56
Ⓐ ❺	—	—	—	—	—
Ⓐ ❻	1350	2.19	3.30	85	47
Ⓐ ❼	1440	1.71	2.60	82	57
Ⓐ ❽	1540	0.96	1.60	79	56
Ⓐ ❾	—	—	—	—	—
Ⓐ ❿	1080	1.12	1.80	80	47
Ⓐ ⓫	1120	0.82	1.40	76	57
Ⓐ ⓬	1170	0.47	1.00	72	56
Ⓐ ⓭	—	—	—	—	—
Ⓐ ⓮	730	0.37	0.90	69	47
Ⓐ ⓯	750	0.27	0.70	65	57
Ⓐ ⓰	780	0.16	0.50	60	56

ebmpapst

- **Technical features:**
  - PFC (passive)
  - Integrated PID controller
  - Control input 0-10 VDC / PWM
  - Input for sensor 0-10 V or 4-20 mA
  - Slave output 0-10 V max. 3 mA
  - Output 20 VDC (±20 %) max. 50 mA
  - Output 10 VDC (+10 %) max. 10 mA
  - RS485 ebmBUS
  - Alarm relay
  - Line undervoltage / phase failure detection
  - Motor current limitation
  - Electronics / motor overtemperature protection
  - Locked-rotor protection
  - Soft start
- **EMC:** Interference emission acc. to EN 61000-6-3
  Interference immunity acc. to EN 61000-6-2
  Harmonics acc. to DIN EN 61000-3-2/3
- **Leakage current:** < 3.5 mA acc. to EN 61800-5-1
- **Connection leads:** Via terminal strip
- **Protection class:** I (acc. to EN 61800-5-1)
- **Product conforming to standard:** CE
- **Approvals:** VDE, UL, CSA, GOST

Centrifugal fan	Mass of centrifugal fan kg	Inlet nozzle	Flange
R3G 310-AU07 -03	19.4	31010-2-4013	10050-2-4017

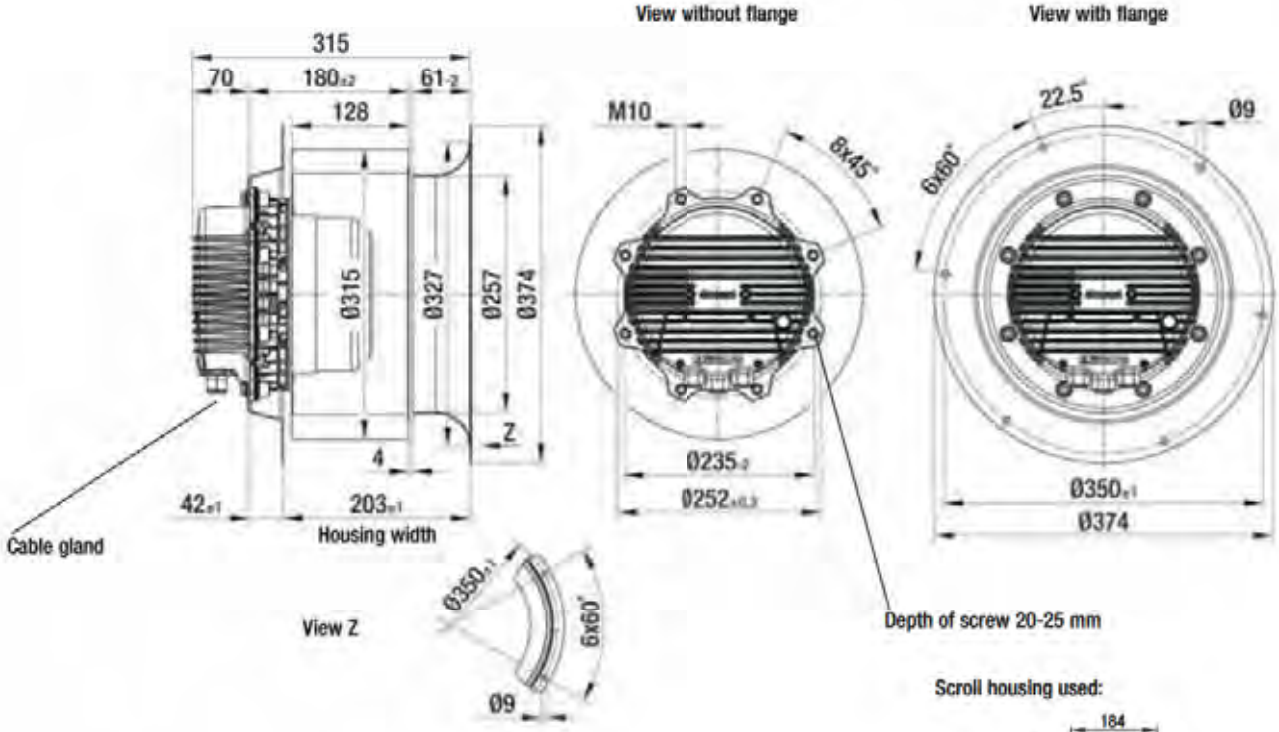

EC centrifugal fan

single inlet, Ø 355

- **Material:** Impeller: Galvanised sheet steel
  Rotor: Coated in black
  Electronics enclosure: Die-cast aluminium
- **Direction of rotation:** Clockwise, seen on rotor
- **Type of protection:** IP 54 (acc. to EN 60529)
- **Insulation class:** "F"
- **Mounting position:** Shaft horizontal or rotor on bottom; rotor on top on request
- **Condensate discharges:** Rotor-side
- **Mode of operation:** Continuous operation (S1)
- **Bearings:** Maintenance-free ball bearings

Nominal data		Curve	Nominal voltage range	Frequency	Speed/rpm	Max. power input (1)	Max. current draw (1)	Min. back pressure	Perm. amb. temp.	Electr. connection
Type	**Motor**		**VAC**	**Hz**	**rpm**	**kW**	**A**	**Pa**	**°C**	p. 608
R3G 355	M3G 150-FF	Ⓐ	3~ 380-480	50/60	1180	2.60	4.00	300	-25 to +35	M)

subject to alterations

(1) Nominal data in operating point with maximum load and 400 VAC

Curves

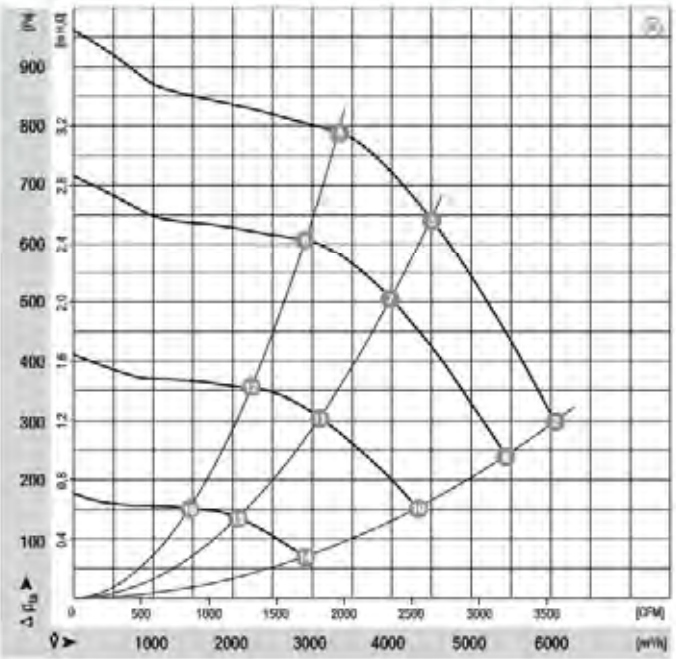

	n [rpm]	P_1 [kW]	I [A]	Lp_A [dB(A)]	η_{tt} [%]
Ⓐ ❶	—	—	—	—	—
Ⓐ ❷	1180	2.60	4.00	84	54
Ⓐ ❸	1280	1.95	3.00	80	64
Ⓐ ❹	1350	1.52	2.30	79	64
Ⓐ ❺	—	—	—	—	—
Ⓐ ❻	1050	1.91	2.90	82	54
Ⓐ ❼	1130	1.36	2.00	77	64
Ⓐ ❽	1190	1.02	1.60	75	64
Ⓐ ❾	—	—	—	—	—
Ⓐ ❿	840	0.97	1.70	76	54
Ⓐ ⓫	890	0.66	1.30	71	64
Ⓐ ⓬	920	0.49	1.00	68	64
Ⓐ ⓭	—	—	—	—	—
Ⓐ ⓮	580	0.31	0.70	65	54
Ⓐ ⓯	600	0.22	0.60	59	64
Ⓐ ⓰	610	0.17	0.50	56	64

- **Technical features:**
  - PFC (passive)
  - Integrated PID controller
  - Control input 0-10 VDC / PWM
  - Input for sensor 0-10 V or 4-20 mA
  - Slave output 0-10 V max. 3 mA
  - Output 20 VDC (±20 %) max. 50 mA
  - Output 10 VDC (+10 %) max. 10 mA
  - RS485 ebmBUS
  - Alarm relay
  - Line undervoltage / phase failure detection
  - Motor current limitation
  - Electronics / motor overtemperature protection
  - Locked-rotor protection
  - Soft start
- **EMC:** Interference emission acc. to EN 61000-6-3
  Interference immunity acc. to EN 61000-6-2
  Harmonics acc. to DIN EN 61000-3-2/3
- **Leakage current:** < 3.5 mA acc. to EN 61800-5-1
- **Connection leads:** Via terminal strip
- **Protection class:** I (acc. to EN 61800-5-1)
- **Product conforming to standard:** CE
- **Approvals:** VDE, UL, CSA, GOST

Centrifugal fan	Mass of centrifugal fan kg	Inlet nozzle	Flange
R3G 355-AR08 -03	19.9	35510-2-4013	10051-2-4017

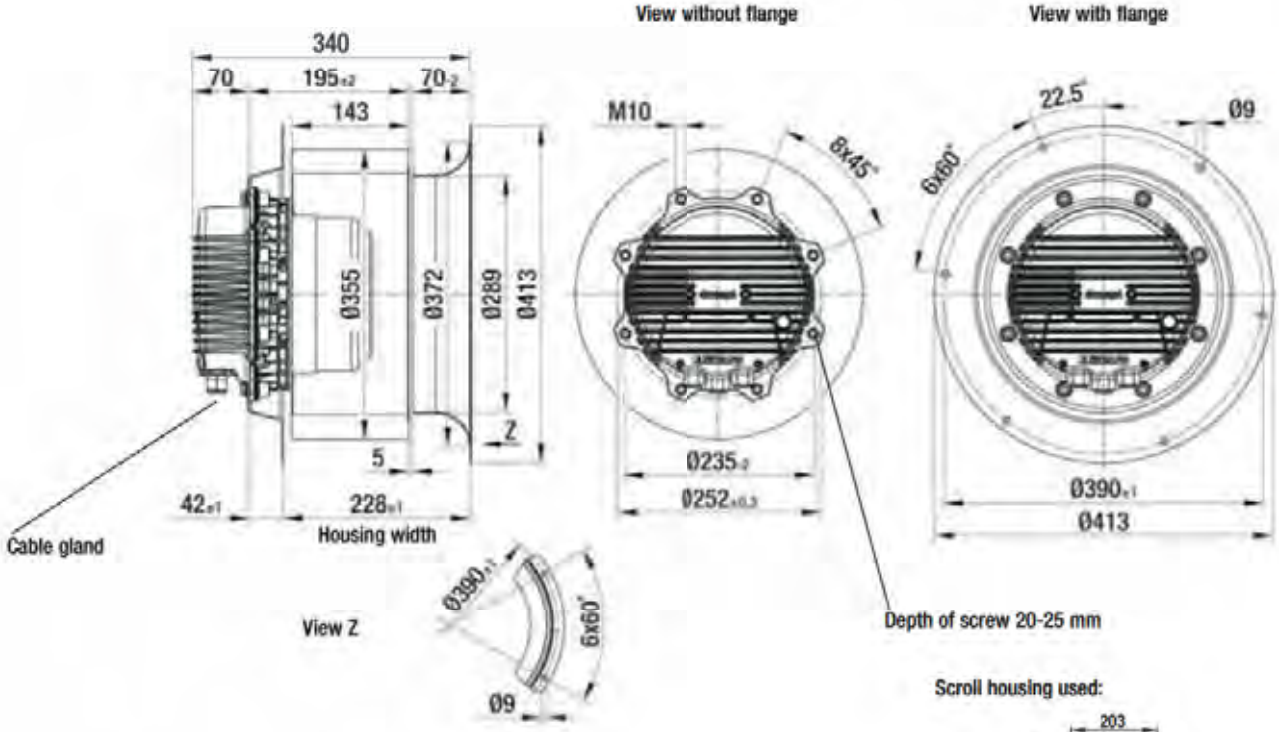

Inlet nozzle p. 552
Electr. connection p. 608

EC centrifugal fan

single inlet, Ø 400

- **Material:** Impeller: Galvanised sheet steel
  Rotor: Coated in black
  Electronics enclosure: Die-cast aluminium
- **Direction of rotation:** Clockwise, seen on rotor
- **Type of protection:** IP 54 (acc. to EN 60529)
- **Insulation class:** "F"
- **Mounting position:** Shaft horizontal or rotor on bottom; rotor on top on request
- **Condensate discharges:** Rotor-side
- **Mode of operation:** Continuous operation (S1)
- **Bearings:** Maintenance-free ball bearings

Nominal data		Curve	Nominal voltage range	Frequency	Speed/rpm	Max. power input (1)	Max. current draw (1)	Min. back pressure	Perm. amb. temp.	Electr. connection
Type	**Motor**		**VAC**	**Hz**	**rpm**	**kW**	**A**	**Pa**	**°C**	p. 608
R3G 400	M3G 150-IF	Ⓐ	3~ 380-480	50/60	930	2.13	3.30	200	-25 to +45	M)

subject to alterations

(1) Nominal data in operating point with maximum load and 400 VAC

Curves

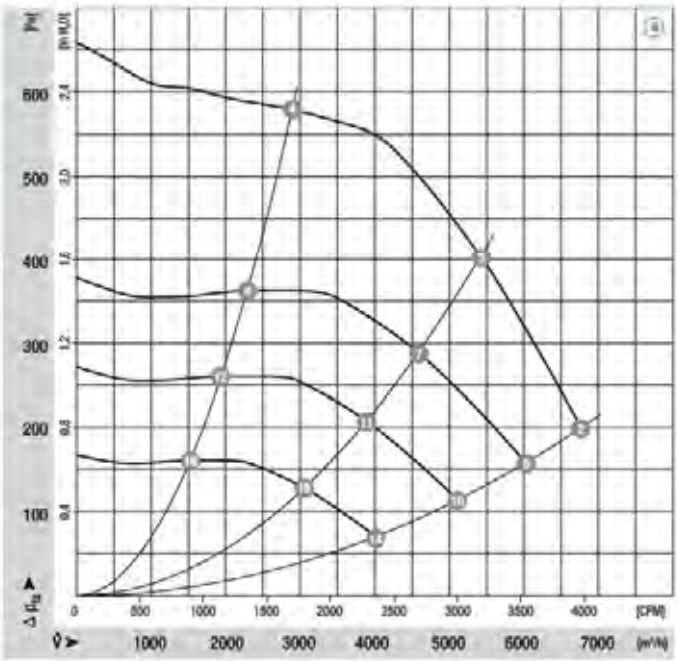

	n [rpm]	P_1 [kW]	I [A]	Lp_A [dB(A)]	η_{tt} [%]
Ⓐ ❶	—	—	—	—	—
Ⓐ ❷	930	2.13	3.30	83	54
Ⓐ ❸	980	1.68	2.60	80	63
Ⓐ ❹	1040	0.93	1.60	74	61
Ⓐ ❺	—	—	—	—	—
Ⓐ ❻	830	1.49	2.40	80	54
Ⓐ ❼	830	1.01	1.60	75	63
Ⓐ ❽	830	0.46	0.80	67	61
Ⓐ ❾	—	—	—	—	—
Ⓐ ❿	700	0.91	1.40	76	54
Ⓐ ⓫	700	0.62	1.00	71	63
Ⓐ ⓬	700	0.28	0.50	63	61
Ⓐ ⓭	—	—	—	—	—
Ⓐ ⓮	550	0.44	0.70	69	54
Ⓐ ⓯	550	0.30	0.50	65	63
Ⓐ ⓰	550	0.14	0.20	56	61

ebmpapst

- **Technical features:**
  - PFC (passive)
  - Integrated PID controller
  - Control input 0-10 VDC / PWM
  - Input for sensor 0-10 V or 4-20 mA
  - Slave output 0-10 V max. 3 mA
  - Output 20 VDC (±20 %) max. 50 mA
  - Output 10 VDC (+10 %) max. 10 mA
  - RS485 ebmBUS
  - Alarm relay
  - Line undervoltage / phase failure detection
  - Motor current limitation
  - Electronics / motor overtemperature protection
  - Locked-rotor protection
  - Soft start
- **EMC:** Interference emission acc. to EN 61000-6-3
  Interference immunity acc. to EN 61000-6-2
  Harmonics acc. to DIN EN 61000-3-2/3
- **Leakage current:** < 3.5 mA acc. to EN 61800-5-1
- **Connection leads:** Via terminal strip
- **Protection class:** I (acc. to EN 61800-5-1)
- **Product conforming to standard:** CE
- **Approvals:** VDE, UL, CSA, GOST

Centrifugal fan	Mass of centrifugal fan kg	Inlet nozzle	Flange
R3G 400-AR04 -03	25.5	40010-2-4013	10052-2-4017

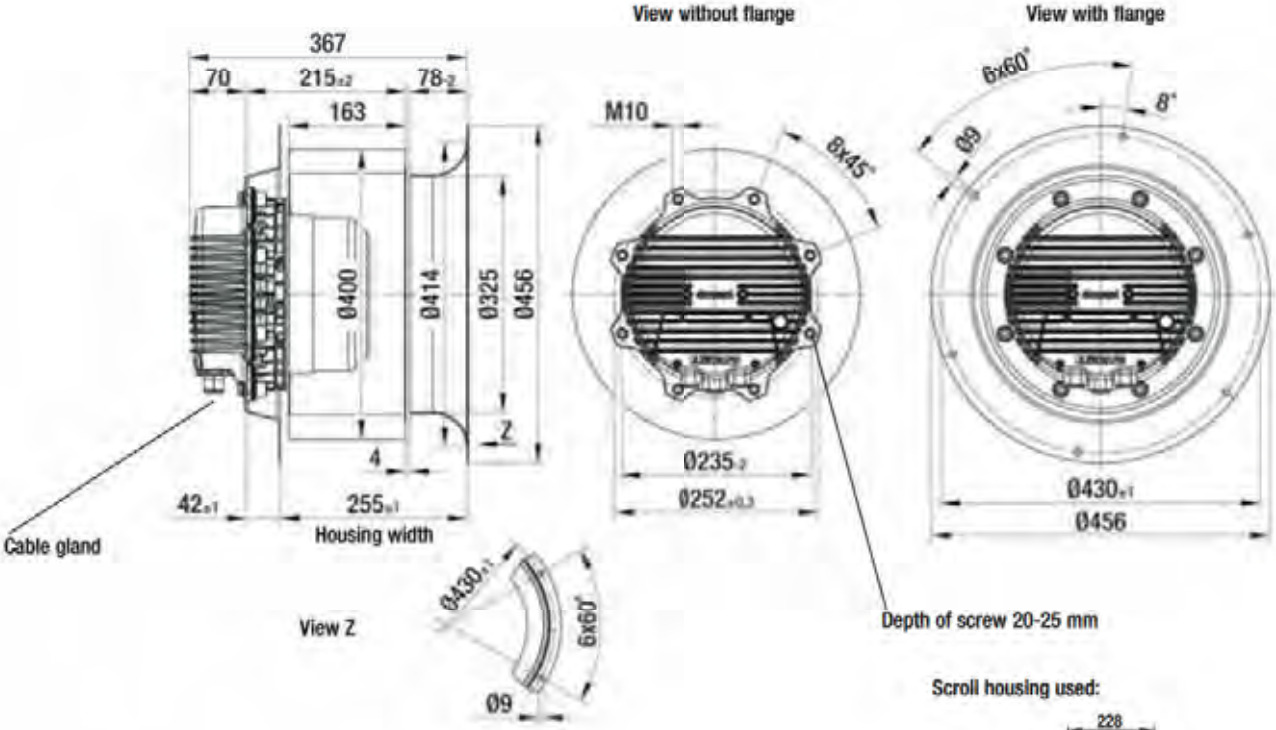

Scroll housing used:

EC centrifugal fan

single inlet, Ø 400

- **Material:** Impeller: Galvanised sheet steel
  Rotor: Coated in black
  Electronics enclosure: Die-cast aluminium
- **Direction of rotation:** Clockwise, seen on rotor
- **Type of protection:** IP 54 (acc. to EN 60529)
- **Insulation class:** "F"
- **Mounting position:** Shaft horizontal or rotor on bottom; rotor on top on request
- **Condensate discharges:** Rotor-side
- **Mode of operation:** Continuous operation (S1)
- **Bearings:** Maintenance-free ball bearings

Nominal data		Curve	Nominal voltage range	Frequency	Speed/rpm	Max. power input (1)	Max. current draw (1)	Min. back pressure	Perm. amb. temp.	Electr. connection
Type	**Motor**		**VAC**	**Hz**	**rpm**	**kW**	**A**	**Pa**	**°C**	p. 608
R3G 400	M3G 150-NA	Ⓐ	3~ 380-480	50/60	1120	3.080	4.60	300	-25 to +55	M)

subject to alterations

(1) Nominal data in operating point with maximum load and 400 VAC

Curves

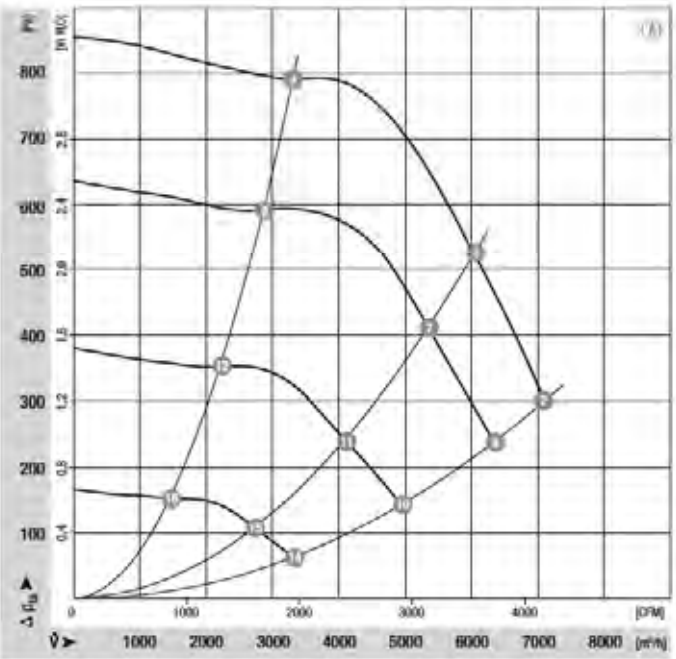

	n [rpm]	P_1 [kW]	I [A]	Lp_A [dB(A)]	η_{tt} [%]
Ⓐ ❶	—	—	—	—	—
Ⓐ ❷	1120	3.08	4.60	87	49
Ⓐ ❸	1160	2.60	3.90	85	57
Ⓐ ❹	1220	1.53	2.30	79	58
Ⓐ ❺	—	—	—	—	—
Ⓐ ❻	1000	2.16	3.20	84	49
Ⓐ ❼	1020	1.81	2.70	82	57
Ⓐ ❽	1060	1.02	1.70	75	58
Ⓐ ❾	—	—	—	—	—
Ⓐ ❿	780	1.05	1.70	78	49
Ⓐ ⓫	790	0.87	1.50	75	57
Ⓐ ⓬	820	0.51	1.10	68	58
Ⓐ ⓭	—	—	—	—	—
Ⓐ ⓮	520	0.35	0.80	67	49
Ⓐ ⓯	530	0.31	0.70	64	57
Ⓐ ⓰	550	0.19	0.50	57	58

ebmpapst

- **Technical features:**
  - PFC (passive)
  - Integrated PID controller
  - Control input 0-10 VDC / PWM
  - Input for sensor 0-10 V or 4-20 mA
  - Slave output 0-10 V max. 3 mA
  - Output 20 VDC (±20 %) max. 50 mA
  - Output 10 VDC (+10 %) max. 10 mA
  - RS485 ebmBUS
  - Alarm relay
  - Line undervoltage / phase failure detection
  - Motor current limitation
  - Electronics / motor overtemperature protection
  - Locked-rotor protection
  - Soft start
- **EMC:** Interference emission acc. to EN 61000-6-3
  Interference immunity acc. to EN 61000-6-2
  Harmonics acc. to DIN EN 61000-3-2/3
- **Leakage current:** < 3.5 mA acc. to EN 61800-5-1
- **Connection leads:** Via terminal strip
- **Protection class:** I (acc. to EN 61800-5-1)
- **Product conforming to standard:** CE
- **Approvals:** VDE, UL, CSA, GOST

Centrifugal fan	Mass of centrifugal fan kg	Inlet nozzle	Flange
R3G 400-AT01 -03	30.0	40010-2-4013	10052-2-4017

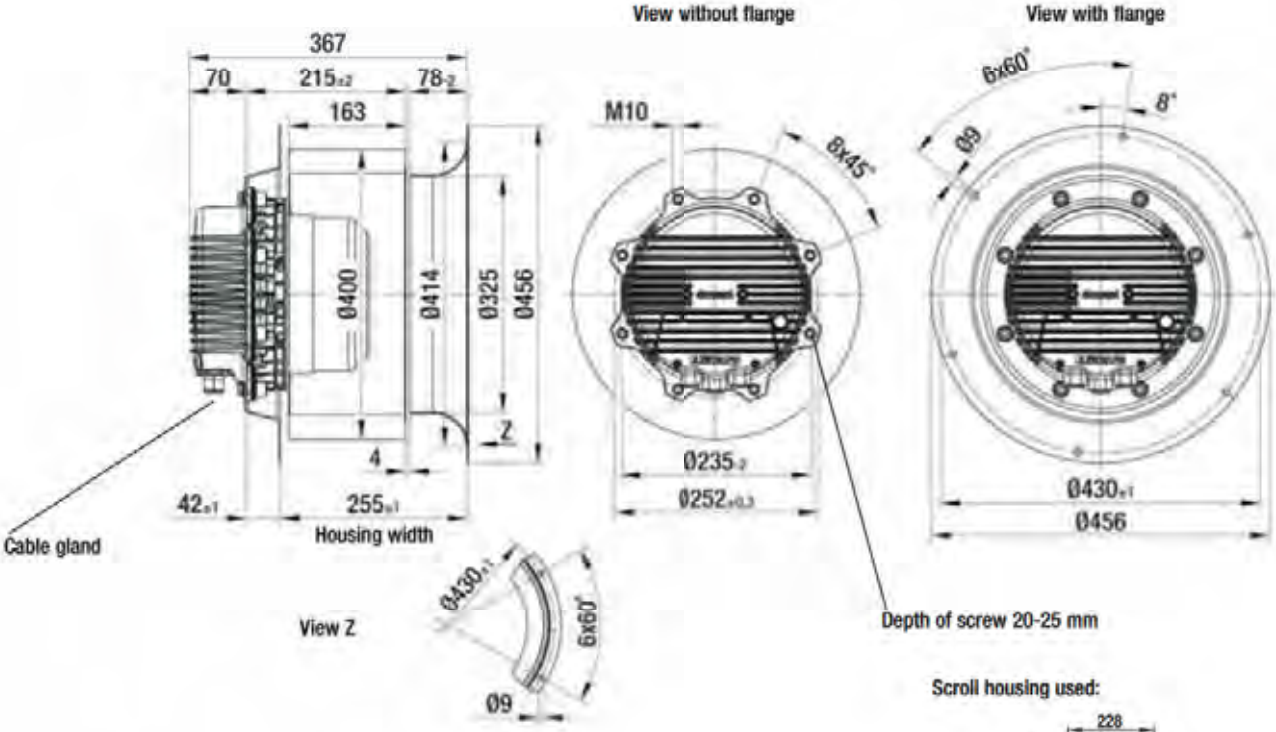

Scroll housing used:

EC centrifugal fan

single inlet, Ø 450

- **Material:** Impeller: Galvanised sheet steel
  Rotor: Coated in black
  Electronics enclosure: Die-cast aluminium
- **Direction of rotation:** Clockwise, seen on rotor
- **Type of protection:** IP 54 (acc. to EN 60529)
- **Insulation class:** "F"
- **Mounting position:** Shaft horizontal or rotor on bottom; rotor on top on request
- **Condensate discharges:** Rotor-side
- **Mode of operation:** Continuous operation (S1)
- **Bearings:** Mairtenance-free ball bearings

Nominal data		Curve	Nominal voltage range	Frequency	Speed/rpm	Max. power input (1)	Max. current draw (1)	Min. back pressure	Perm. amb. temp.	Electr. connection
Type	**Motor**		**VAC**	**Hz**	**rpm**	**kW**	**A**	**Pa**	**°C**	p. 608
R3G 450	M3G 150-NA	Ⓐ	3~ 380-480	50/60	890	2.65	4.50	300	-25 to +50	M)

subject to alterations

(1) Nominal data in operating point with maximum load and 400 VAC

Curves

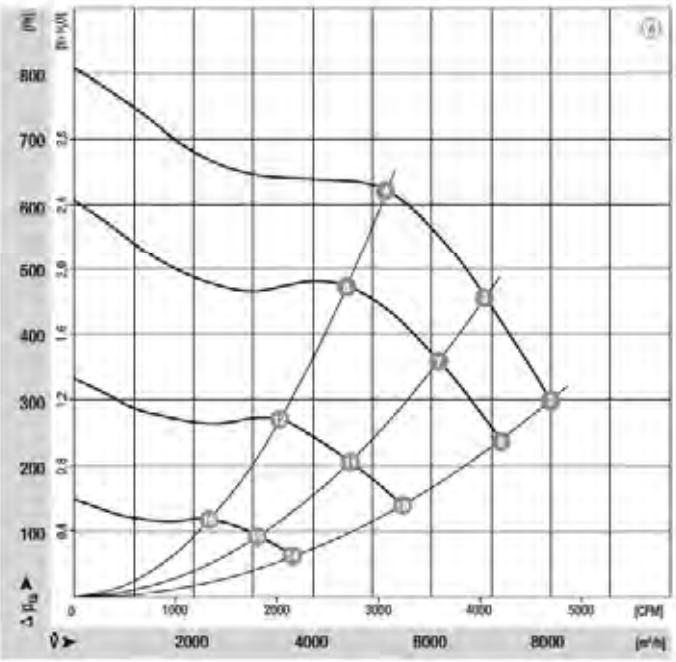

	n [rpm]	P_1 [kW]	I [A]	Lp_A [dB(A)]	η_{tt} [%]
Ⓐ ❶	—	—	—	—	—
Ⓐ ❷	890	2.65	4.50	82	60
Ⓐ ❸	920	2.26	3.50	80	66
Ⓐ ❹	970	1.80	2.80	76	70
Ⓐ ❺	—	—	—	—	—
Ⓐ ❻	790	1.82	3.20	79	60
Ⓐ ❼	810	1.58	2.80	76	66
Ⓐ ❽	840	1.17	2.20	74	70
Ⓐ ❾	—	—	—	—	—
Ⓐ ❿	610	0.83	1.60	71	60
Ⓐ ⓫	620	0.73	1.50	68	66
Ⓐ ⓬	630	0.54	1.10	66	70
Ⓐ ⓭	—	—	—	—	—
Ⓐ ⓮	410	0.27	0.70	60	60
Ⓐ ⓯	420	0.23	0.60	57	66
Ⓐ ⓰	420	0.18	0.50	54	70

ebmpapst

- **Technical features:**
  - PFC (passive)
  - Integrated PID controller
  - Control input 0-10 VDC / PWM
  - Input for sensor 0-10 V or 4-20 mA
  - Slave output 0-10 V max. 3 mA
  - Output 20 VDC (±20 %) max. 50 mA
  - Output 10 VDC (+10 %) max. 10 mA
  - RS485 ebmBUS
  - Alarm relay
  - Line undervoltage / phase failure detection
  - Motor current limitation
  - Electronics / motor overtemperature protection
  - Locked-rotor protection
  - Soft start
- **EMC:** Interference emission acc. to EN 61000-6-3
  Interference immunity acc. to EN 61000-6-2
  Harmonics acc. to DIN EN 61000-3-2/3
- **Leakage current:** < 3.5 mA acc. to EN 61800-5-1
- **Connection leads:** Via terminal strip
- **Protection class:** I (acc. to EN 61800-5-1)
- **Product conforming to standard:** CE
- **Approvals:** VDE, UL, CSA, GOST
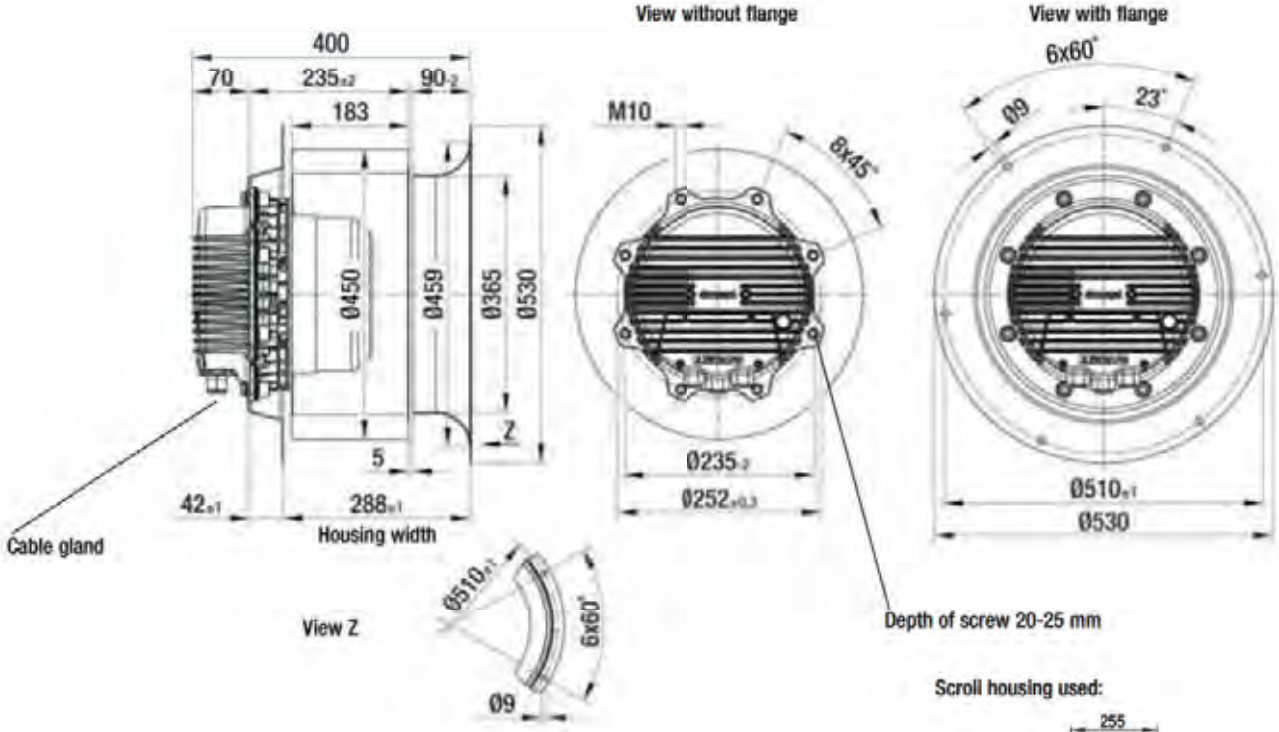
Centrifugal fan	Mass of centrifugal fan kg	Inlet nozzle	Flange
R3G 450-AR03 -03	31.5	45010-2-4013	10053-2-4017