AC axial fans

S series, Ø 500

- **Material:** Guard grille: Steel, phosphated and coated in black plastic
  Wall ring: Sheet steel, pre-galvanised and coated in black plastic
  Blades: Sheet aluminium
  Rotor: Encased in aluminium
- **Number of blades:** 5
- **Direction of rotation:** Direction of air flow "V" counter-clockwise, direction of air flow "A" counter-clockwise, seen on rotor
- **Type of protection:** IP 54 (acc. to EN 60529)
- **Insulation class:** "F"
- **Mounting position:** Any
- **Condensate discharge holes:** On rotor and stator side
- **Mode of operation:** Continuous operation (S1)
- **Bearings:** Maintenance-free ball bearings

Nominal data		Blade angle	Curve	Nominal voltage	Frequency	Speed/rpm (1)	Max. power input (1)	Max. current draw (1)	Capacitor	Max. operative range	Perm. amb. temp.	Electr. connection
Type	Motor			VAC	Hz	rpm	kW	A	µF/VDB	Pa	°C	p. 416 f.
*4D 500	M4D110-EF	-10°	Ⓐ	3~ 400 Δ	50	1310	0.58	1.10	—	155	-40 to +85	F1b)/F2b)
			Ⓑ	3~ 400 Y	50	1010	0.38	0.65	—	95	-40 to +85	
*4D 500	M4D110-GF	0°	Ⓒ	3~ 400 Δ	50	1325	0.82	1.59	—	160	-40 to +80	F1b)/F2b)
			Ⓓ	3~ 400 Y	50	1035	0.55	0.95	—	100	-40 to +80	
*4D 500	M4D110-GF	-5°	Ⓔ	3~ 400 Δ	50	1360	0.69	1.43	—	160	-40 to +90	F1b)/F2b)
			Ⓕ	3~ 400 Y	50	1110	0.49	0.86	—	105	-40 to +90	

subject to alterations

(1) Nominal data in operating point ❸ with maximum load

Curves

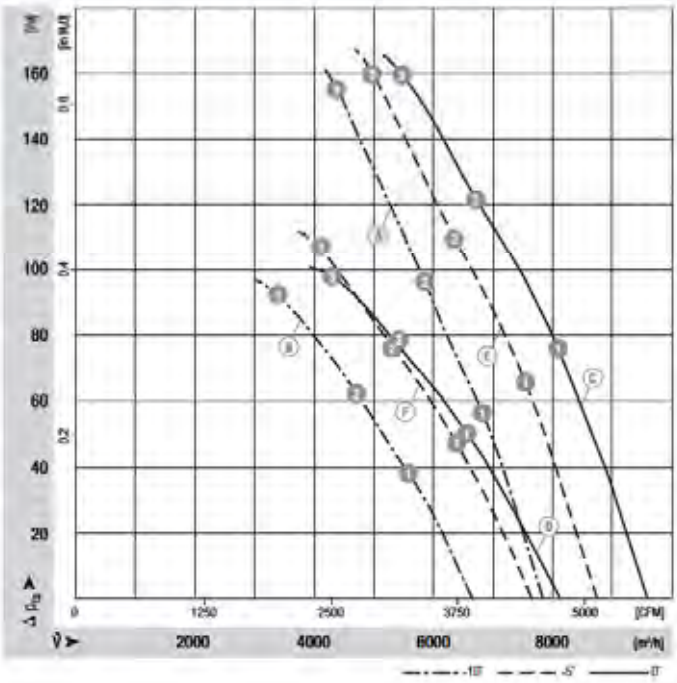

	n [rpm]	P_1 [kW]	I [A]	Lw_A [dB(A)]
Ⓐ ❶	1355	0.46	0.97	78
Ⓐ ❷	1340	0.50	1.01	78
Ⓐ ❸	1310	0.58	1.10	80
Ⓑ ❶	1110	0.33	0.56	72
Ⓑ ❷	1070	0.34	0.60	73
Ⓑ ❸	1010	0.38	0.65	74
Ⓒ ❶	1355	0.70	1.39	77
Ⓒ ❷	1345	0.75	1.44	78
Ⓒ ❸	1325	0.82	1.59	80
Ⓓ ❶	1100	0.50	0.84	73
Ⓓ ❷	1070	0.52	0.87	72
Ⓓ ❸	1035	0.55	0.95	74
Ⓔ ❶	1390	0.57	1.23	76
Ⓔ ❷	1380	0.62	1.29	77
Ⓔ ❸	1360	0.69	1.43	80
Ⓕ ❶	1180	0.43	0.72	73
Ⓕ ❷	1150	0.46	0.77	73
Ⓕ ❸	1110	0.49	0.86	76

ebmpapst

- **Motor protection:** Design with thermal overload protector
- **Cable exit:** Via terminal box
- **Protection class:** I (acc. to EN 61800-5-1)
- **Product conforming to standard:** CE
- **Approvals:** VDE (acc. to EN 60034)

Direction of air flow	< "V"/"A" >	< "V"/"A" >	< "V"	< "V"	"A" >	"A" >	< "V"
	Without attachments	With full square nozzle	With guard grille for full nozzle	With guard grille for short nozzle	With guard grille for full nozzle	With guard grille for short nozzle	In-line duct fan
"V"	A4D 500-AI01 -01	W4D 500-GI01 -01	S4D 500-CI01 -01	S4D 500-AI01 -01	—	—	—
"A"	A4D 500-AI01 -02	W4D 500-DI01 -02	—	—	S4D 500-BI01 -02	S4D 500-AI01 -02	—
"V"	A4D 500-AD03 -01	W4D 500-GD03 -01	S4D 500-CD03 -01	S4D 500-AD03 -01	—	—	W4D 500-ID03 -01
"A"	A4D 500-AD03 -02	W4D 500-DD03 -02	—	—	S4D 500-BD03 -02	S4D 500-AD03 -02	—
"V"	A4D 500-AE03 -01	W4D 500-GE03 -01	S4D 500-CE03 -01	S4D 500-AE03 -01	—	—	—
"A"	A4D 500-AE03 -02	W4D 500-DE03 -02	—	—	S4D 500-BE03 -02	S4D 500-AE03 -02	—

AC axial fans

S series, Ø 500

- **Material:** Guard grille: Steel, phosphated and coated in black plastic
  Wall ring: Sheet steel, pre-galvanised and coated in black plastic
  Blades: Sheet aluminium
  Rotor: Encased in aluminium
- **Number of blades:** 5
- **Direction of rotation:** Direction of air flow "V" counter-clockwise, direction of air flow "A" counter-clockwise, seen on rotor
- **Type of protection:** IP 54 (acc. to EN 60529)
- **Insulation class:** "F"
- **Mounting position:** Any
- **Condensate discharge holes:** On rotor and stator side
- **Mode of operation:** Continuous operation (S1)
- **Bearings:** Maintenance-free ball bearings

Nominal data		Blade angle	Curve	Nominal voltage	Frequency	Speed/rpm (1)	Max. power input (1)	Max. current draw (1)	Capacitor	Max. operative range	Perm. amb. temp.	Electr. connection
Type	Motor			VAC	Hz	rpm	kW	A	µF/VDB	Pa	°C	p. 416 f.
*6D 500	M6D110-EF	0°	Ⓐ	3~ 400 Δ	50	920	0.32	0.75	—	75	-40 to +75	F1b)/F2b)
			Ⓑ	3~ 400 Y	50	765	0.23	0.40	—	50	-40 to +75	
*6D 500	M6D110-EF	-5°	Ⓒ	3~ 400 Δ	50	945	0.29	0.74	—	80	-40 to +80	F1b)/F2b)
			Ⓓ	3~ 400 Y	50	790	0.20	0.36	—	60	-40 to +80	
*6D 500	M6D110-EF	-10°	Ⓔ	3~ 400 Δ	50	950	0.23	0.69	—	65	-40 to +80	F1b)/F2b)
*8D 500	M8D110-EF	0°	Ⓖ	3~ 400 Δ	50	700	0.21	0.61	—	45	-40 to +70	F1b)/F2b)
			Ⓗ	3~ 400 Y	50	615	0.12	0.25	—	34	-40 to +70	

Subject to alterations

(1) Nominal data in operating point ○ with maximum load

Curves

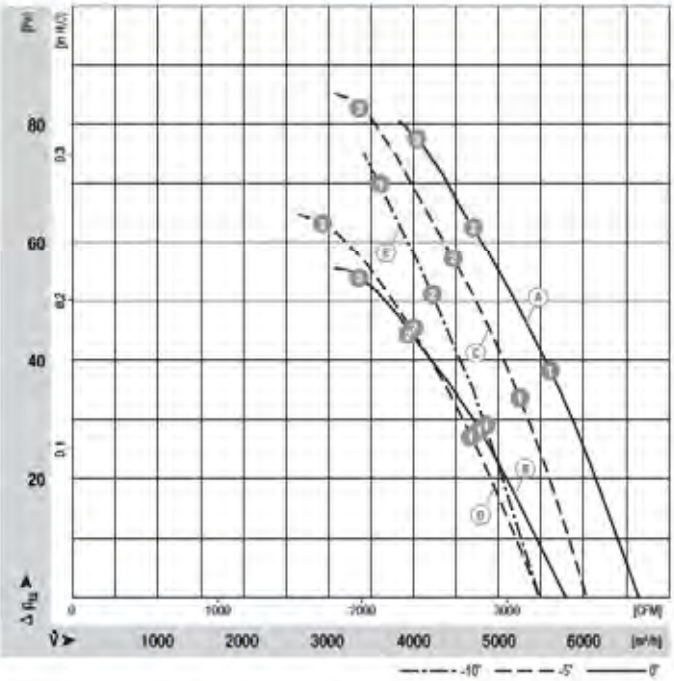

	n [rpm]	P_1 [kW]	I [A]	Lw_A [dB(A)]
Ⓐ ❶	935	0.29	0.75	70
Ⓐ ❷	930	0.30	0.76	70
Ⓐ ❸	920	0.32	0.75	71
Ⓑ ❶	800	0.20	0.36	67
Ⓑ ❷	785	0.21	0.37	66
Ⓑ ❸	765	0.23	0.40	67
Ⓒ ❶	950	0.24	0.71	69
Ⓒ ❷	940	0.25	0.72	69
Ⓒ ❸	945	0.29	0.74	72
Ⓓ ❶	845	0.17	0.31	66
Ⓓ ❷	830	0.18	0.33	66
Ⓓ ❸	790	0.20	0.36	68
Ⓔ ❶	960	0.20	0.68	68
Ⓔ ❷	955	0.21	0.68	70
Ⓔ ❸	950	0.23	0.69	71

- **Motor protection:** Design with thermal overload protector
- **Cable exit:** Via terminal box
- **Protection class:** I (acc. to EN 61800-5-1)
- **Product conforming to standard:** CE
- **Approvals:** VDE (acc. to EN 60034)

Direction of air flow	< "V"/"A" >	< "V"/"A" >	< "V"	< "V"	"A" >	"A" >	< "V"
	Without attachments	With full square nozzle	With guard grille for full nozzle	With guard grille for short nozzle	With guard grille for full nozzle	With guard grille for short nozzle	In-line duct fan
"V"	A6D 500-AG03 -01	W6D 500-GG03 -01	S6D 500-CG03 -01	S6D 500-AG03 -01	—	—	—
"A"	A6D 500-AG03 -02	W6D 500-DG03 -02	—	—	S6D 500-BG03 -02	S6D 500-AG03 -02	—
"V"	A6D 500-AH03 -01	W6D 500-GH03 -01	S6D 500-CH03 -01	S6D 500-AH03 -01	—	—	—
"A"	A6D 500-AH03 -02	W6D 500-DH03 -02	—	—	S6D 500-BH03 -02	S6D 500-AH03 -02	—
"V"	A6D 500-AI03 -01	W6D 500-GI03 -01	S6D 500-CI03 -01	S6D 500-AI03 -01	—	—	—
"A"	A6D 500-AI03 -02	W6D 500-DI03 -02	—	—	S6D 500-BI03 -02	S6D 500-AI03 -02	—
"V"	A8D 500-AG01 -01	W8D 500-GG01 -01	S8D 500-CG01 -01	S8D 500-AG01 -01	—	—	—
"A"	A8D 500-AG01 -02	W8D 500-DG01 -02	—	—	S8D 500-BG01 -02	S8D 500-AG01 -02	—

Curves

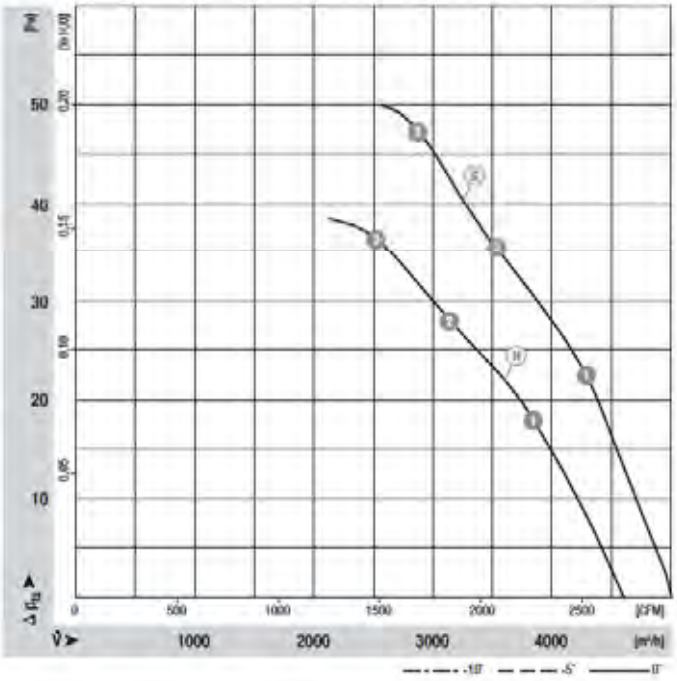

	n [rpm]	P_1 [kW]	I [A]	LW_A [dB(A)]
Ⓐ ❶	710	0.19	0.64	64
Ⓐ ❷	710	0.20	0.63	62
Ⓐ ❸	700	0.21	0.61	65
Ⓗ ❶	635	0.11	0.23	61
Ⓗ ❷	630	0.12	0.24	60
Ⓗ ❸	615	0.12	0.25	61

AC axial fans

S series, Ø 500

- **Material:** Guard grille: Steel, phosphated and coated in black plastic
  Wall ring: Sheet steel, pre-galvanised and coated in black plastic
  Blades: Sheet aluminium
  Rotor: Encased in aluminium
- **Number of blades:** 5
- **Direction of rotation:** Direction of air flow "V" counter-clockwise, direction of air flow "A" counter-clockwise, seen on rotor
- **Type of protection:** IP 54 (acc. to EN 60529)
- **Insulation class:** "F"
- **Mounting position:** Any
- **Condensate discharge holes:** On rotor and stator side
- **Mode of operation:** Continuous operation (S1)
- **Bearings:** Maintenance-free ball bearings

Nominal data		Blade angle	Curve	Nominal voltage	Frequency	Speed/rpm (1)	Max. power input (1)	Max. current draw (1)	Capacitor	Max. operative range	Perm. amb. temp.	Electr. connection
Type	Motor			VAC	Hz	rpm	kW	A	µF/VDB	Pa	°C	p. 416 f.
*4E 500	M4E 110-EF	-10°	Ⓐ	1~ 230	50	1300	0.53	2.31	10.0/450	115	-40 to +75	A2b)
*4E 500	M4E 110-GF	0°	Ⓑ	1~ 230	50	1270	0.76	3.33	14.0/400	130	-40 to +60	A2b)
*4E 500	M4E 110-GF	-5°	Ⓒ	1~ 230	50	1330	0.71	3.10	14.0/450	160	-40 to +70	A2b)

subject to alterations

(1) Nominal data in operating point ❶ with maximum load

Curves

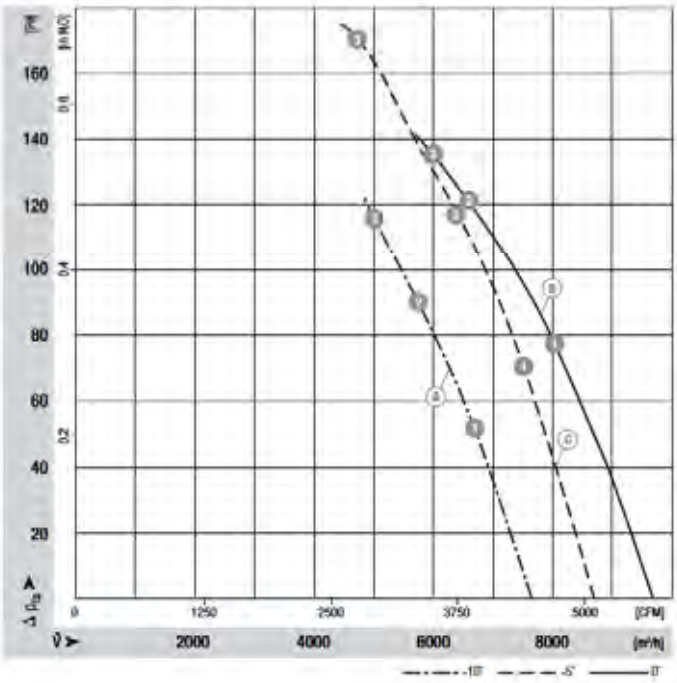

	n [rpm]	P_1 [kW]	I [A]	LW_A [dB(A)]
Ⓐ ❶	1345	0.47	2.06	76
Ⓐ ❷	1320	0.51	2.21	77
Ⓐ ❸	1300	0.53	2.31	78
Ⓑ ❶	1305	0.71	3.13	77
Ⓑ ❷	1285	0.75	3.28	77
Ⓑ ❸	1270	0.76	3.33	78
Ⓒ ❶	1375	0.59	2.59	76
Ⓒ ❷	1355	0.64	2.80	77
Ⓒ ❸	1330	0.71	3.10	80

ebmpapst

- **Motor protection:** Design with thermal overload protector
- **Cable exit:** Via terminal box
- **Protection class:** I (acc. to EN 61800-5-1)
- **Product conforming to standard:** CE
- **Approvals:** VDE (acc. to EN 60034)

Direction of air flow	< "V"/"A" >	< "V"/"A" >	< "V"	< "V"	"A" >	"A" >	< "V"
	Without attachments	With full square nozzle	With guard grille for full nozzle	With guard grille for short nozzle	With guard grille for full nozzle	With guard grille for short nozzle	In-line duct fan
"V"	A4E 500-AI01 -01	W4E 500-GI01 -01	S4E 500-CI01 -01	S4E 500-AI01 -01	—	—	—
"A"	A4E 500-AI01 -02	W4E 500-DI01 -02	—	—	S4E 500-BI01 -02	S4E 500-AI01 -02	—
"V"	A4E 500-AD03 -01	W4E 500-GD03 -01	S4E 500-CD03 -01	S4E 500-AD03 -01	—	—	W4E 500-ID03 -01
"A"	A4E 500-AD03 -02	W4E 500-DD03 -02	—	—	S4E 500-BD03 -02	S4E 500-AD03 -02	—
"V"	A4E 500-AE03 -01	W4E 500-GE03 -01	S4E 500-CE03 -01	S4E 500-AE03 -01	—	—	—
"A"	A4E 500-AE03 -02	W4E 500-DE03 -02	—	—	S4E 500-BE03 -02	S4E 500-AE03 -02	—

Drawings p. 82 ff.
Capacitor p. 382 f.
Speed setting p. 384 f.
Motor protection p. 386 ff.
Electr. connections p. 416 f.

AC axial fans

S series, Ø 500

- **Material:** Guard grille: Steel, phosphated and coated in black plastic
  Wall ring: Sheet steel, pre-galvanised and coated in black plastic
  Blades: Sheet aluminium
  Rotor: Encased in aluminium
- **Number of blades:** 5
- **Direction of rotation:** Direction of air flow "V" counter-clockwise, direction of air flow "A" counter-clockwise, seen on rotor
- **Type of protection:** IP 54 (acc. to EN 60529)
- **Insulation class:** "F"
- **Mounting position:** Any
- **Condensate discharge holes:** On rotor and stator side
- **Mode of operation:** Continuous operation (S1)
- **Bearings:** Maintenance-free ball bearings

Nominal data		Blade angle	Curve	Nominal voltage	Frequency	Speed/rpm (1)	Max. power input (1)	Max. current draw (1)	Capacitor	Max. operative range	Perm. amb. temp.	Electr. connection
Type	Motor			VAC	Hz	rpm	kW	A	µF/VDB	Pa	°C	p. 416 f.
*6E 500	M6E 110-EF	0°	Ⓐ	1~ 230	50	890	0.30	1.32	8.0/400	70	-40 to +80	A2b)
*6E 500	M6E 110-EF	-5°	Ⓑ	1~ 230	50	910	0.27	1.19	8.0/450	80	-40 to +85	A2b)
*6E 500	M6E 110-EF	-10°	Ⓒ	1~ 230	50	930	0.25	1.10	8.0/450	85	-40 to +85	A2b)
*8E 500	M8E 110-EF	0°	Ⓓ	1~ 230	50	690	0.19	1.11	4.0/450	40	-40 to +80	A2b)

Subject to alterations

(1) Nominal data in operating point ☐ with maximum load

Curves

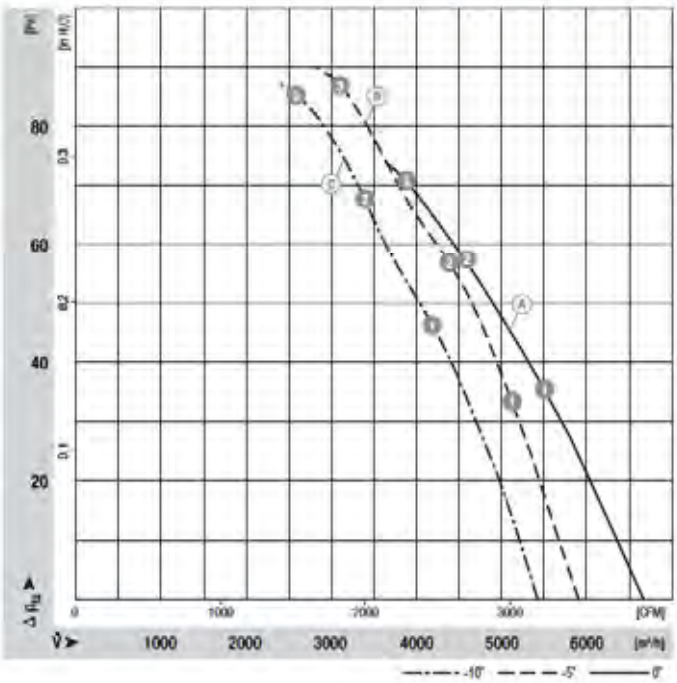

	n [rpm]	P_1 [kW]	I [A]	Lw_A [dB(A)]
Ⓐ ❶	910	0.28	1.20	71
Ⓐ ❷	900	0.29	1.25	69
Ⓐ ❸	890	0.30	1.32	70
Ⓑ ❶	935	0.24	1.04	69
Ⓑ ❷	925	0.25	1.09	69
Ⓑ ❸	910	0.27	1.19	72
Ⓒ ❶	945	0.23	0.99	69
Ⓒ ❷	940	0.24	1.04	71
Ⓒ ❸	930	0.25	1.10	74

ebmpapst

- **Motor protection:** Design with thermal overload protector
- **Cable exit:** Via terminal box
- **Protection class:** I (acc. to EN 61800-5-1)
- **Product conforming to standard:** CE
- **Approvals:** VDE (acc. to EN 60034)

Direction of air flow							
	< "V"/"A" >	< "V"/"A" >	< "V"	< "V"	"A" >	"A" >	< "V"
	Without attachments	With full square nozzle	With guard grille for full nozzle	With guard grille for short nozzle	With guard grille for full nozzle	With guard grille for short nozzle	In-line duct fan
"V"	A6E 500-AG03 -01	W6E 500-GG03 -01	S6E 500-CG03 -01	S6E 500-AG03 -01	—	—	W6E 500-IG03 -01
"A"	A6E 500-AG03 -02	W6E 500-DG03 -02	—	—	S6E 500-BG03 -02	S6E 500-AG03 -02	—
"V"	A6E 500-AH03 -01	W6E 500-GH03 -01	S6E 500-CH03 -01	S6E 500-AH03 -01	—	—	—
"A"	A6E 500-AH03 -02	W6E 500-DH03 -02	—	—	S6E 500-BH03 -02	S6E 500-AH03 -02	—
"V"	A6E 500-AI03 -01	W6E 500-GI03 -01	S6E 500-CI03 -01	S6E 500-AI03 -01	—	—	—
"A"	A6E 500-AI03 -02	W6E 500-DI03 -02	—	—	S6E 500-BI03 -02	S6E 500-AI03 -02	—
"V"	A8E 500-AG01 -01	W8E 500-GG01 -01	S8E 500-CG01 -01	S8E 500-AG01 -01	—	—	—
"A"	A8E 500-AG01 -02	W8E 500-DG01 -02	—	—	S8E 500-BG01 -02	S8E 500-AG01 -02	—

Curves

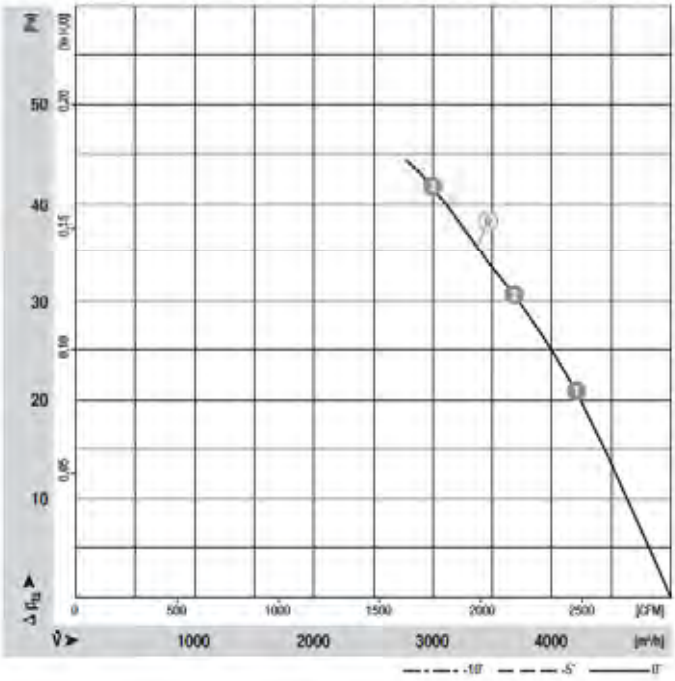

	n [rpm]	P_1 [kW]	I [A]	LW_A [dB(A)]
⑤ ❶	695	0.18	1.09	64
⑤ ❷	695	0.19	1.10	63
⑤ ❸	690	0.19	1.11	63

AC axial fans

S series, Ø 500, drawings for direction of air flow "V"

Without attachments

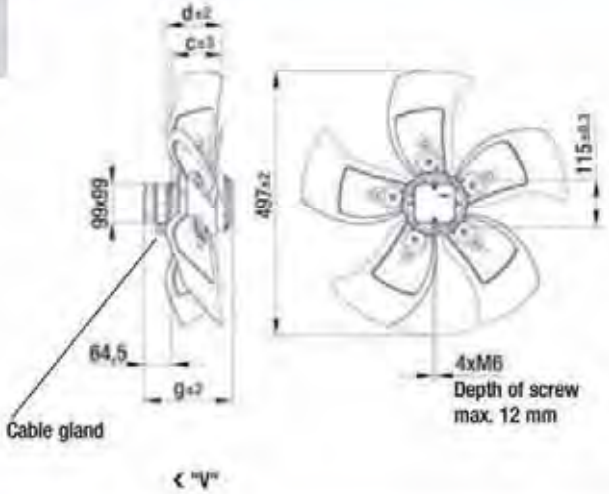

Type	Mass [kg]	c	d	g
A4D 500-AI01 -01	8.8	92.0	78.0	188.5
A4D 500-AD03 -01	11.0	104.0	101.0	208.5
A4D 500-AE03 -01	11.0	98.0	89.0	208.5
A6D 500-AG03 -01	8.8	104.0	101.0	188.5
A6D 500-AH03 -01	8.8	98.0	89.0	188.5
A6D 500-AI03 -01	8.8	92.0	78.0	188.5
A8D 500-AG01 -01	8.8	104.0	101.0	188.5
A4E 500-AI01 -01	8.8	92.0	78.0	188.5
A4E 500-AD03 -01	11.0	104.0	101.0	208.5
A4E 500-AE03 -01	11.0	98.0	89.0	208.5
A6E 500-AG03 -01	8.8	104.0	101.0	188.5
A6E 500-AH03 -01	8.8	98.0	89.0	188.5
A6E 500-AI03 -01	8.8	92.0	78.0	188.5
A8E 500-AG01 -01	8.8	104.0	101.0	188.5

With full square nozzle

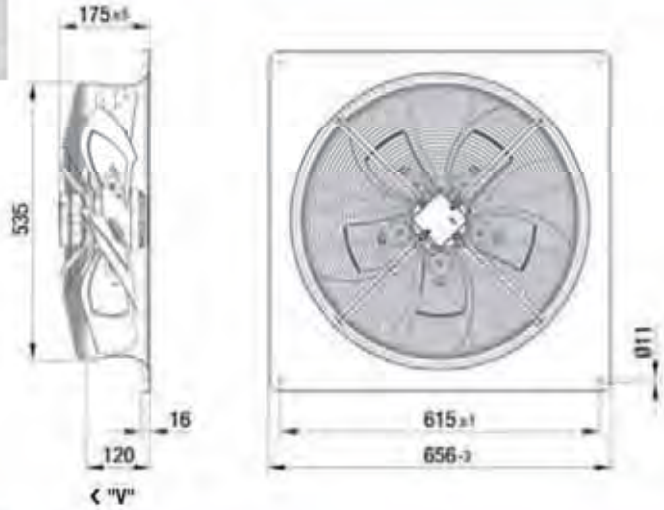

Type	Mass [kg]
W4D 500-GI01 -01	18.6
W4D 500-GD03 -01	21.0
W4D 500-GE03 -01	21.0
W6D 500-GG03 -01	18.6
W6D 500-GH03 -01	18.6
W6D 500-GI03 -01	18.6
W8D 500-GG01 -01	18.6
W4E 500-GI01 -01	18.6
W4E 500-GD03 -01	21.0
W4E 500-GE03 -01	21.0
W6E 500-GG03 -01	18.6
W6E 500-GH03 -01	18.6
W6E 500-GI03 -01	18.6
W8E 500-GG01 -01	18.6

With guard grille for full nozzle

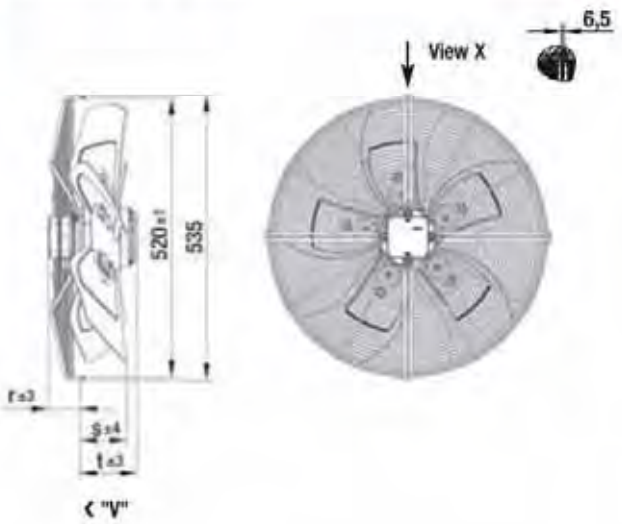

Type	Mass [kg]	r	s	t
S4D 500-CI01 -01	12.6	63.5	91.0	123.0
S4D 500-CD03 -01	14.8	65.5	103.0	143.0
S4D 500-CE03 -01	14.8	65.5	97.0	143.0
S6D 500-CG03 -01	12.6	65.5	103.0	123.0
S6D 500-CH03 -01	12.6	65.5	97.0	123.0
S6D 500-CI03 -01	12.6	63.5	97.0	123.0
S8D 500-CG01 -01	12.6	63.5	103.0	123.0
S4E 500-CI01 -01	12.6	63.5	91.0	123.0
S4E 500-CD03 -01	14.8	65.5	103.0	143.0
S4E 500-CE03 -01	14.8	65.5	97.0	143.0
S6E 500-CG03 -01	12.6	63.5	103.0	123.0
S6E 500-CH03 -01	12.6	63.5	97.0	123.0
S6E 500-CI03 -01	12.6	63.5	97.0	123.0
S8E 500-CG01 -01	12.6	63.5	103.0	123.0

With guard grille for short nozzle

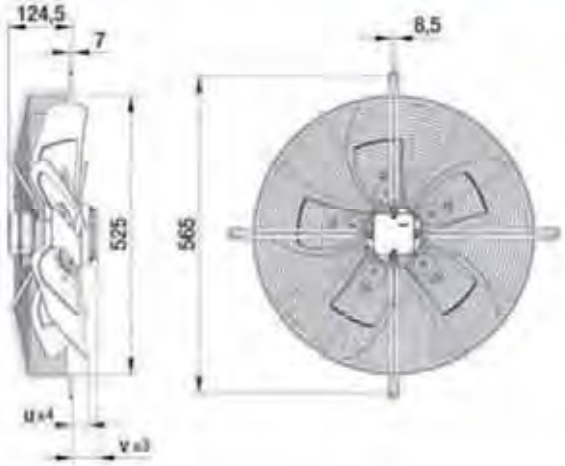

< "V"

Type	Mass [kg]	u	v
S4D 500-AI01 -01	13.3	32.0	64.0
S4D 500-AD03 -01	15.5	44.0	84.0
S4D 500-AE03 -01	15.5	38.0	84.0
S6D 500-AG03 -01	13.3	44.0	64.0
S6D 500-AH03 -01	13.3	38.0	64.0
S6D 500-AI03 -01	13.3	32.0	64.0
S8D 500-AG01 -01	13.3	44.0	64.0
S4E 500-AI01 -01	13.3	32.0	64.0
S4E 500-AD03 -01	15.5	44.0	84.0
S4E 500-AE03 -01	15.5	38.0	84.0
S6E 500-AG03 -01	13.3	44.0	64.0
S6E 500-AH03 -01	13.3	38.0	64.0
S6E 500-AI03 -01	13.3	32.0	64.0
S8E 500-AG01 -01	13.3	44.0	64.0

In-line duct fan

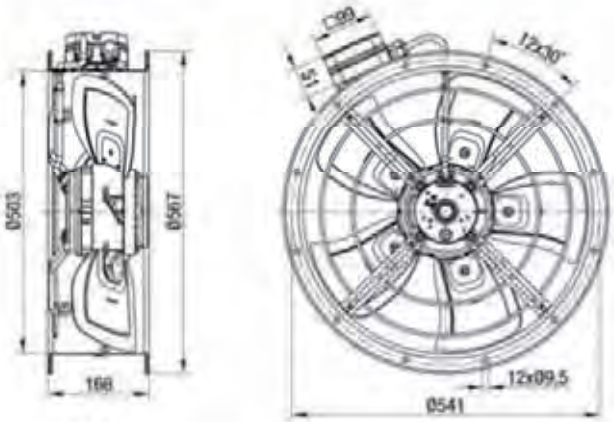

< "V"

Type	Mass [kg]
W4D 500-ID03 -01	16.8
W4E 500-ID03 -01	16.8
W6E 500-IG03 -01	14.8

AC axial fans

S series, Ø 500, drawings for direction of air flow "A"

Without attachments

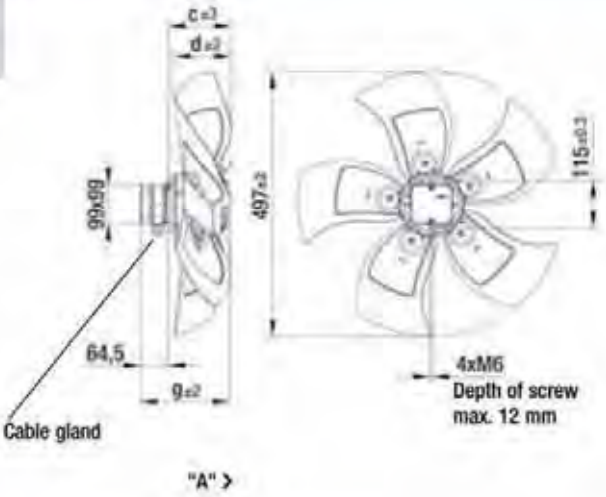

Type	Mass [kg]	c	d	g
A4D 500-AI01 -02	8.8	95.0	78.0	188.5
A4D 500-AD03 -02	11.0	131.0	101.0	208.5
A4D 500-AE03 -02	11.0	126.0	89.0	208.5
A6D 500-AG03 -02	8.8	131.0	101.0	188.5
A6D 500-AH03 -02	8.8	126.0	89.0	188.5
A6D 500-AI03 -02	8.8	120.0	78.0	188.5
A8D 500-AG01 -02	8.8	131.0	101.0	188.5
A4E 500-AI01 -02	8.8	120.0	78.0	188.5
A4E 500-AD03 -02	11.0	131.0	101.0	208.5
A4E 500-AE03 -02	11.0	126.0	89.0	208.5
A6E 500-AG03 -02	8.8	131.0	101.0	188.5
A6E 500-AH03 -02	8.8	126.0	89.0	188.5
A6E 500-AI03 -02	8.8	120.0	78.0	188.5
A8E 500-AG01 -02	8.8	131.0	101.0	188.5

With full square nozzle

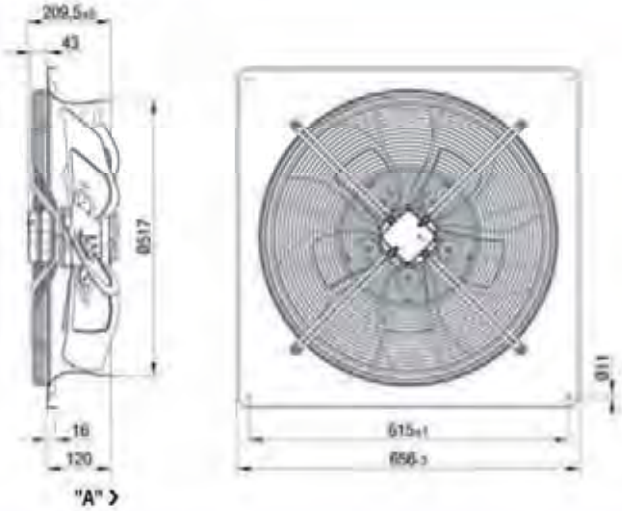

Type	Mass [kg]
W4D 500-DI01 -02	18.8
W4D 500-DD03 -02	21.0
W4D 500-DE03 -02	21.0
W6D 500-DG03 -02	18.8
W6D 500-DH03 -02	18.8
W6D 500-DI03 -02	18.8
W8D 500-DG01 -02	18.8
W4E 500-DI01 -02	18.8
W4E 500-DD03 -02	21.0
W4E 500-DE03 -02	21.0
W6E 500-DG03 -02	18.8
W6E 500-DH03 -02	18.8
W6E 500-DI03 -02	18.8
W8E 500-DG01 -02	18.8

With guard grille for full nozzle

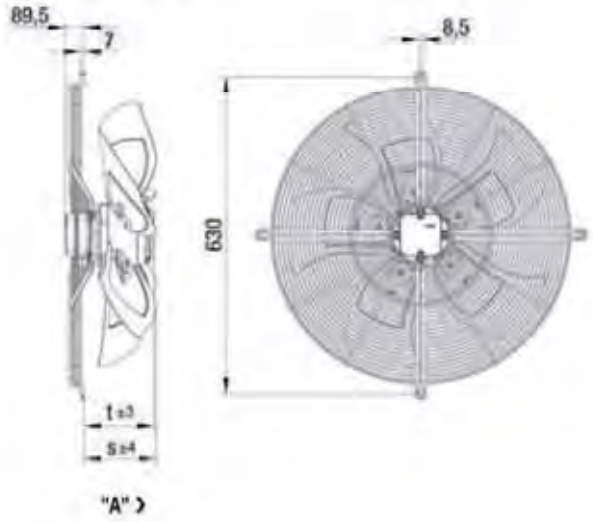

Type	Mass [kg]	s	t
S4D 500-BI01 -02	12.6	95.0	99.0
S4D 500-BD03 -02	14.8	119.0	106.0
S4D 500-BE03 -02	14.8	119.0	101.0
S6D 500-BG03 -02	12.6	99.0	106.0
S6D 500-BH03 -02	12.6	99.0	101.0
S6D 500-BI03 -02	12.6	95.0	99.0
S8D 500-BG01 -02	12.6	106.0	99.0
S4E 500-BI01 -02	12.6	95.0	99.0
S4E 500-BD03 -02	14.8	119.0	106.0
S4E 500-BE03 -02	14.8	119.0	101.0
S6E 500-BG03 -02	12.6	106.0	99.0
S6E 500-BH03 -02	12.6	101.0	99.0
S6E 500-BI03 -02	12.6	95.0	99.0
S8E 500-BG01 -02	12.6	106.0	99.0

With guard grille for short nozzle

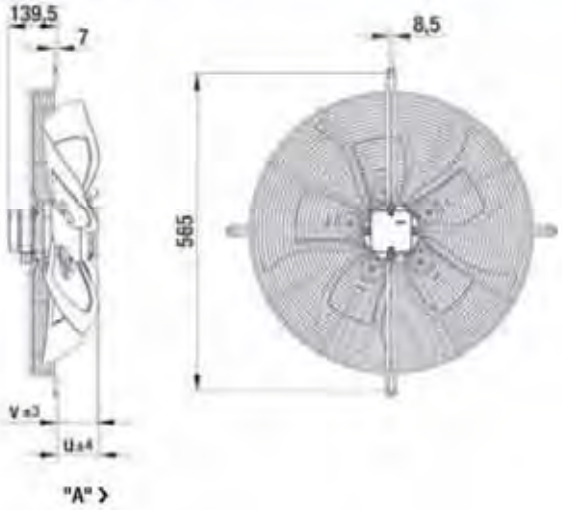

Type	Mass [kg]	u	v
S4D 500-AI01 -02	12.3	45.0	49.0
S4D 500-AD03 -02	14.5	56.0	69.0
S4D 500-AE03 -02	14.5	51.0	69.0
S6D 500-AG03 -02	12.3	56.0	49.0
S6D 500-AH03 -02	12.3	51.0	49.0
S6D 500-AI03 -02	12.3	45.0	49.0
S8D 500-AG01 -02	12.3	56.0	49.0
S4E 500-AI01 -02	12.3	45.0	49.0
S4E 500-AD03 -02	14.5	56.0	69.0
S4E 500-AE03 -02	14.5	51.0	69.0
S6E 500-AG03 -02	12.3	56.0	49.0
S6E 500-AH03 -02	12.3	51.0	49.0
S6E 500-AI03 -02	12.3	45.0	49.0
S8E 500-AG01 -02	12.3	56.0	49.0

AC axial fans

S series, Ø 560

- **Material:** Guard grille: Steel, phosphated and coated in black plastic
  Wall ring: Sheet steel, pre-galvanised and coated in black plastic
  Blades: Sheet aluminium
  Rotor: Encased in aluminium
- **Number of blades:** 5
- **Direction of rotation:** Direction of air flow "V" counter-clockwise, direction of air flow "A" counter-clockwise, seen on rotor
- **Type of protection:** IP 54 (acc. to EN 60529)
- **Insulation class:** "F"
- **Mounting position:** Any
- **Condensate discharge holes:** On rotor and stator side
- **Mode of operation:** Continuous operation (S1)
- **Bearings:** Maintenance-free ball bearings

Nominal data		Blade angle	Curve	Nominal voltage	Frequency	Speed/rpm (1)	Max. power input (1)	Max. current draw (1)	Capacitor	Max. operative range	Perm. amb. temp.	Electr. connection
Type	Motor			VAC	Hz	rpm	kW	A	µF/VDB	Pa	°C	p. 416 f.
*4D 560	M4D110-GF	-10°	Ⓐ	3~ 400 Δ	50	1305	0.93	1.78	—	195	-40 to +65	F1b)/F2b)
			Ⓑ	3~ 400 Y	50	995	0.60	1.05	—	110	-40 to +65	
*4D 560	M4D110-IA	-5°	Ⓒ	3~ 400 Δ	50	1355	1.17	2.53	—	170	-40 to +60	F1b)/F2b)
			Ⓓ	3~ 400 Y	50	1080	0.80	1.45	—	113	-40 to +60	
*6D 560	M6D110-EF	0°	Ⓔ	3~ 400 Δ	50	860	0.50	0.95	—	80	-40 to +55	F1b)/F2b)
			Ⓕ	3~ 400 Y	50	615	0.30	0.52	—	40	-40 to +55	
*6D 560	M6D110-EF	-5°	Ⓖ	3~ 400 Δ	50	890	0.43	0.90	—	90	-40 to +70	F1b)/F2b)
			Ⓗ	3~ 400 Y	50	660	0.28	0.48	—	50	-40 to +70	

Subject to alterations

(1) Nominal data in operating point ☐ with maximum load

Curves

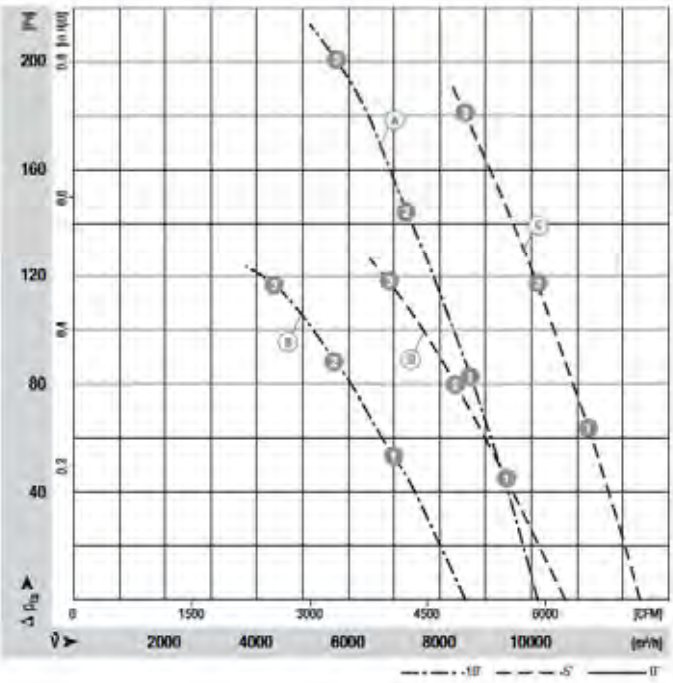

	n [rpm]	P_1 [kW]	I [A]	Lw_A [dB(A)]
Ⓐ ❶	1350	0.76	1.50	79
Ⓐ ❷	1330	0.84	1.60	79
Ⓐ ❸	1305	0.93	1.78	80
Ⓑ ❶	1085	0.53	0.89	76
Ⓑ ❷	1040	0.56	0.95	75
Ⓑ ❸	995	0.60	1.05	75
Ⓒ ❶	1385	0.99	2.33	80
Ⓒ ❷	1370	1.07	2.45	80
Ⓒ ❸	1355	1.17	2.53	81
Ⓓ ❶	1155	0.72	1.28	77
Ⓓ ❷	1125	0.76	1.35	76
Ⓓ ❸	1080	0.80	1.45	77

ebmpapst

- **Motor protection:** Design with thermal overload protector
- **Cable exit:** Via terminal box
- **Protection class:** I (acc. to EN 61800-5-1)
- **Product conforming to standard:** CE
- **Approvals:** VDE (acc. to EN 60034)

Direction of air flow	< "V"/"A" >	< "V"/"A" >	< "V"	< "V"	"A" >	"A" >	< "V"
	Without attachments	With full square nozzle	With guard grille for full nozzle	With guard grille for short nozzle	With guard grille for full nozzle	With guard grille for short nozzle	In-line duct fan
"V"	A4D 560-AF03 -01	W4D 560-GF03 -01	S4D 560-CF03 -01	S4D 560-AF03 -01	—	—	—
"A"	A4D 560-AF03 -02	W4D 560-DF03 -02	—	—	S4D 560-BF03 -02	S4D 560-AF03 -02	—
"V"	A4D 560-AB01 -01	W4D 560-GB01 -01	S4D 560-CB01 -01	S4D 560-AB01 -01	—	—	W4D 560-IB01 -01
"A"	A4D 560-AB01 -02	W4D 560-DB01 -02	—	—	S4D 560-BB01 -02	S4D 560-AB01 -02	—
"V"	A6D 560-AG03 -01	W6D 560-GG03 -01	S6D 560-CG03 -01	S6D 560-AG03 -01	—	—	W6D 560-IG03 -01
"A"	A6D 560-AG03 -02	W6D 560-DG03 -02	—	—	S6D 560-BG03 -02	S6D 560-AG03 -02	—
"V"	A6D 560-AH03 -01	W6D 560-GH03 -01	S6D 560-CH03 -01	S6D 560-AH03 -01	—	—	—
"A"	A6D 560-AH03 -02	W6D 560-DH03 -02	—	—	S6D 560-BH03 -02	S6D 560-AH03 -02	—

Curves

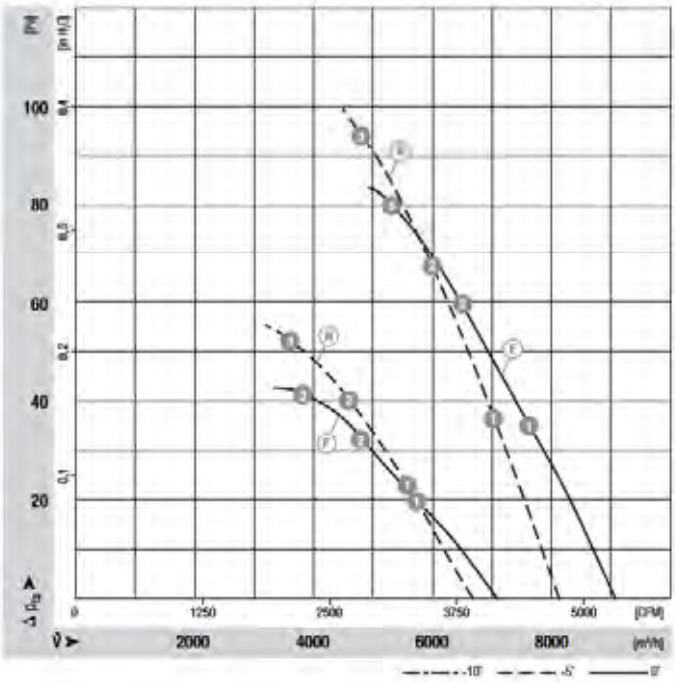

	n [rpm]	P_1 [kW]	I [A]	LW_A [dB(A)]
F 1	885	0.43	0.87	73
F 2	875	0.46	0.89	73
F 3	860	0.50	0.95	74
E 1	670	0.28	0.49	66
E 2	645	0.29	0.50	66
E 3	615	0.30	0.52	66
G 1	915	0.36	0.78	71
G 2	900	0.39	0.81	71
G 3	890	0.43	0.90	71
H 1	720	0.25	0.40	66
H 2	695	0.26	0.42	65
H 3	660	0.28	0.48	64

AC axial fans

S series, Ø 560

- **Material:** Guard grille: Steel, phosphated and coated in black plastic
  Wall ring: Sheet steel, pre-galvanised and coated in black plastic
  Blades: Sheet aluminium
  Rotor: Encased in aluminium
- **Number of blades:** 5
- **Direction of rotation:** Direction of air flow "V" counter-clockwise, direction of air flow "A" counter-clockwise, seen on rotor
- **Type of protection:** IP 54 (acc. to EN 60529)
- **Insulation class:** "F"
- **Mounting position:** Any
- **Condensate discharge holes:** On rotor and stator side
- **Mode of operation:** Continuous operation (S1)
- **Bearings:** Maintenance-free ball bearings

Nominal data		Blade angle	Curve	Nominal voltage	Frequency	Speed/rpm (1)	Max. power input (1)	Max. current draw (1)	Capacitor	Max. operative range	Perm. amb. temp.	Electr. connection
Type	Motor			VAC	Hz	rpm	kW	A	µF/VDB	Pa	°C	p. 416 f.
*4E 560	M4E 110-IA	-5°	Ⓐ	1~ 230	50	1300	1.05	4.60	20.0/400	110	-40 to +60	A2b)
*6E 560	M6E 110-GF	-5°	Ⓑ	1~ 230	50	910	0.43	1.95	10.0/450	90	-40 to +70	A2b)

subject to alterations

(1) Nominal data in operating point ◯ with maximum load

Curves

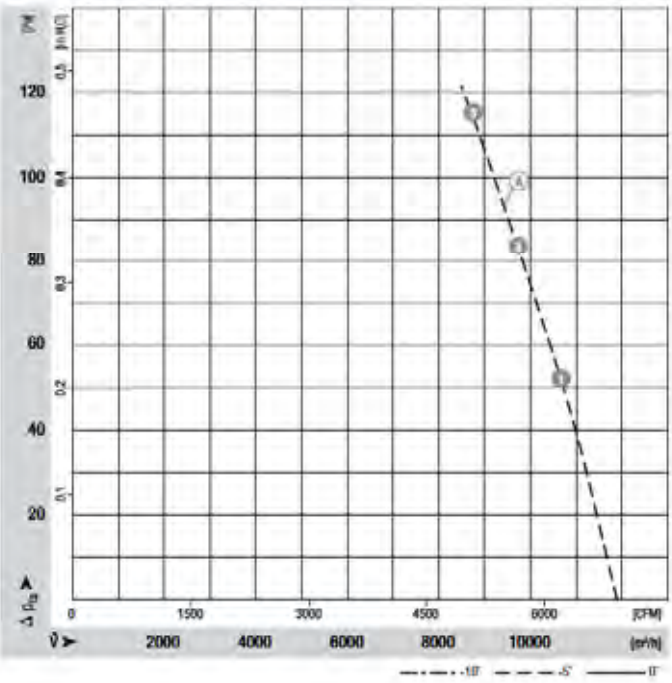

	n [rpm]	P_1 [kW]	I [A]	LW_A [dB(A)]
Ⓐ ❶	1330	0.97	4.21	79
Ⓐ ❷	1310	1.01	4.39	79
Ⓐ ❸	1300	1.05	4.60	79

ebmpapst

- **Motor protection:** Design with thermal overload protector
- **Cable exit:** Via terminal box
- **Protection class:** I (acc. to EN 61800-5-1)
- **Product conforming to standard:** CE
- **Approvals:** VDE (acc. to EN 60034)

Direction of air flow	< "V"/"A" >	< "V"/"A" >	< "V"	< "V"	"A" >	"A" >	< "V"
	Without attachments	With full square nozzle	With guard grille for full nozzle	With guard grille for short nozzle	With guard grille for full nozzle	With guard grille for short nozzle	In-line duct fan
"V"	A4E 560-AB01 -01	W4E 560-GB01 -01	S4E 560-CB01 -01	S4E 560-AB01 -01	—	—	W4E 560-IB01 -01
"A"	A4E 560-AB01 -02	W4E 560-DB01 -02	—	—	S4E 560-BB01 -02	S4E 560-AB01 -02	—
"V"	A6E 560-AE01 -01	W6E 560-GE01 -01	S6E 560-CE01 -01	S6E 560-AE01 -01	—	—	—
"A"	A6E 560-AE01 -02	W6E 560-DE01 -02	—	—	S6E 560-BE01 -02	S6E 560-AE01 -02	—

Curves

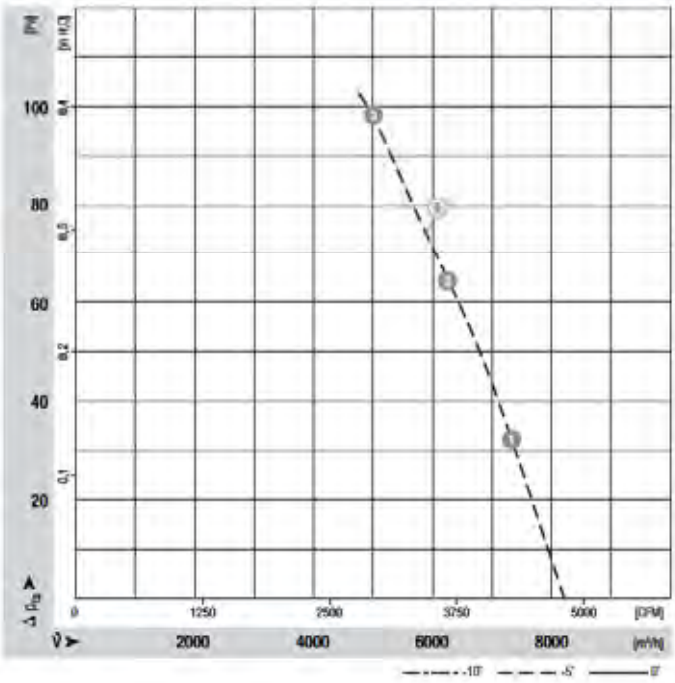

	n [rpm]	P_1 [kW]	I [A]	LW_A [dB(A)]
⑤ ❶	935	0.37	1.85	73
⑤ ❷	925	0.39	1.80	72
⑤ ❸	910	0.43	1.95	72

AC axial fans

S series, Ø 560, drawings for direction of air flow "V"

Without attachments

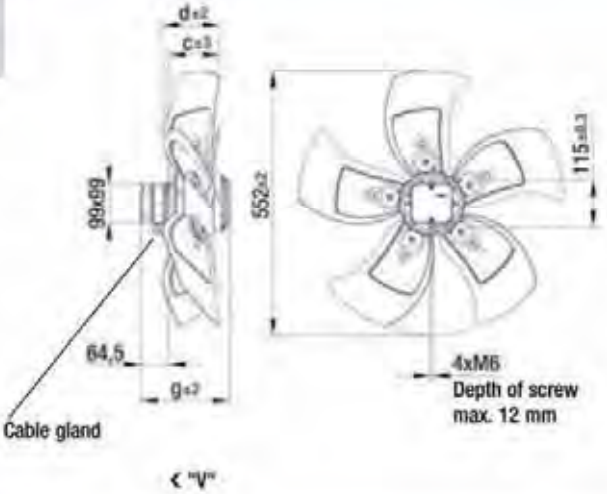

Type	Mass [kg]	c	d	g
A4D 560-AF03 -01	11.5	95.0	96.0	208.5
A4D 560-AB01 -01	13.5	105.0	113.0	223.5
A6D 560-AG03 -01	9.0	114.0	129.0	188.5
A6D 560-AH03 -01	9.0	105.0	113.0	188.5
A4E 560-AB01 -01	13.5	105.0	113.0	223.5
A6E 560-AE01 -01	11.5	105.0	113.0	208.5

With full square nozzle

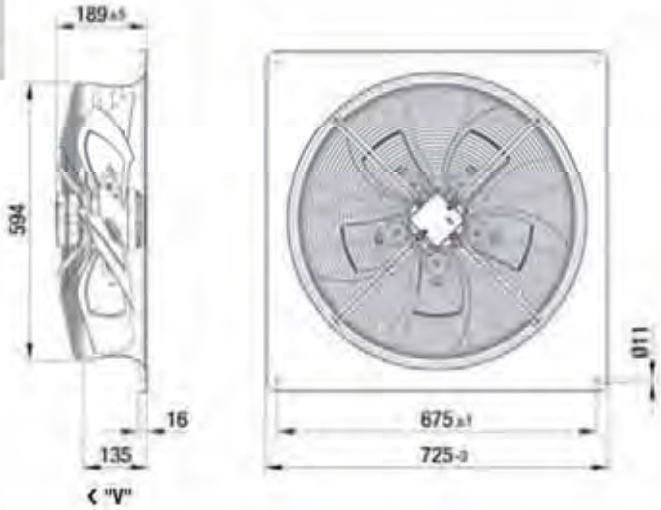

Type	Mass [kg]
W4D 560-GF03 -01	20.0
W4D 560-GB01 -01	21.5
W6D 560-GG03 -01	18.0
W6D 560-GH03 -01	18.0
W4E 560-GB01 -01	21.5
W6E 560-GE01 -01	20.0

With guard grille for full nozzle

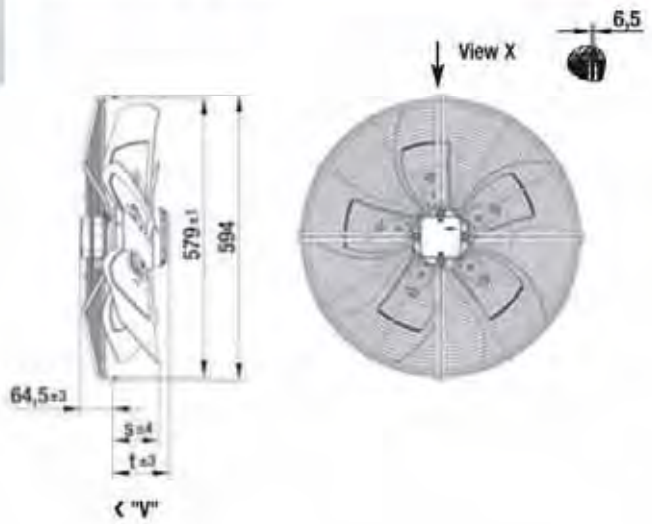

Type	Mass [kg]	s	t
S4D 560-CF03 -01	14.0	95.0	144.0
S4D 560-CB01 -01	15.5	105.0	159.0
S6D 560-CG03 -01	12.0	114.0	124.0
S6D 560-CH03 -01	12.0	105.0	124.0
S4E 560-CB01 -01	15.5	105.0	159.0
S6E 560-CE01 -01	14.0	105.0	144.0

With guard grille for short nozzle

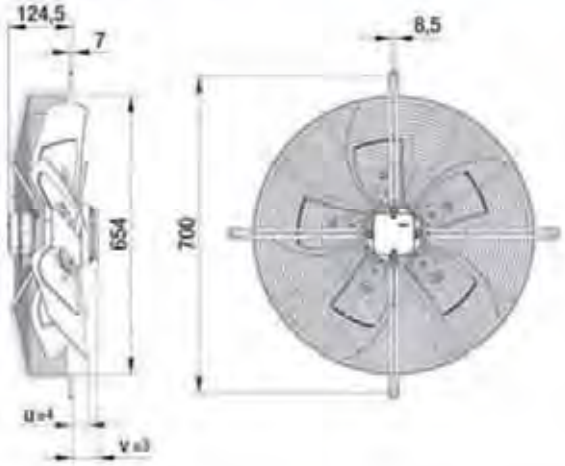

< "V"

Type	Mass [kg]	u	v
S4D 560-AF03 -01	15.5	35.0	84.0
S4D 560-AB01 -01	17.0	45.0	99.0
S6D 560-AG03 -01	13.5	54.0	64.0
S6D 560-AH03 -01	13.5	45.0	64.0
S4E 560-AB01 -01	17.0	45.0	99.0
S6E 560-AE01 -01	15.5	45.0	84.0

In-line duct fan

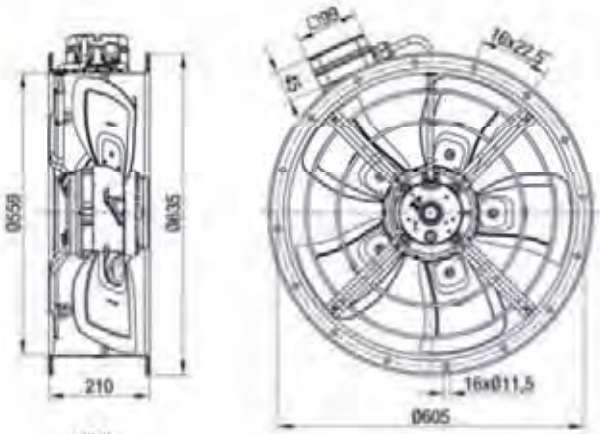

< "V"

Type	Mass [kg]
W4D560-IB01 -01	20.9
W6D560-IG03 -01	16.4
W4E560-IB01 -01	20.9

AC axial fans

S series, Ø 560, drawings for direction of air flow "A"

Without attachments

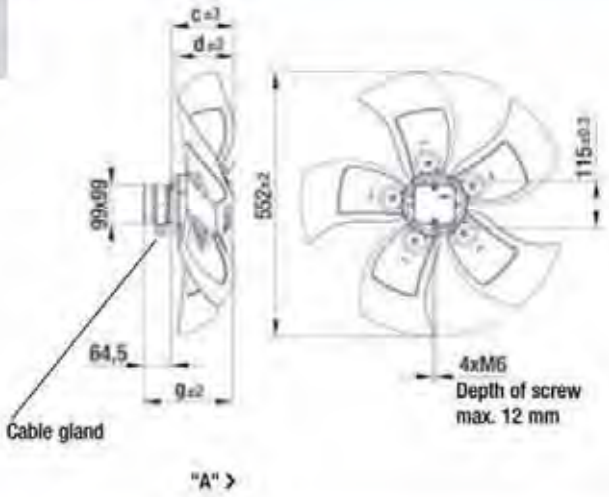

Type	Mass [kg]	c	d	g
A4D 560-AF03 -02	11.5	134.0	96.0	208.5
A4D 560-AB01 -02	13.5	142.0	113.0	223.5
A6D 560-AG03 -02	9.0	149.0	129.0	188.5
A6D 560-AH03 -02	9.0	142.0	113.0	188.5
A4E 560-AB01 -02	13.5	142.0	113.0	223.5
A6E 560-AE01 -02	11.5	142.0	113.0	208.5

With full square nozzle

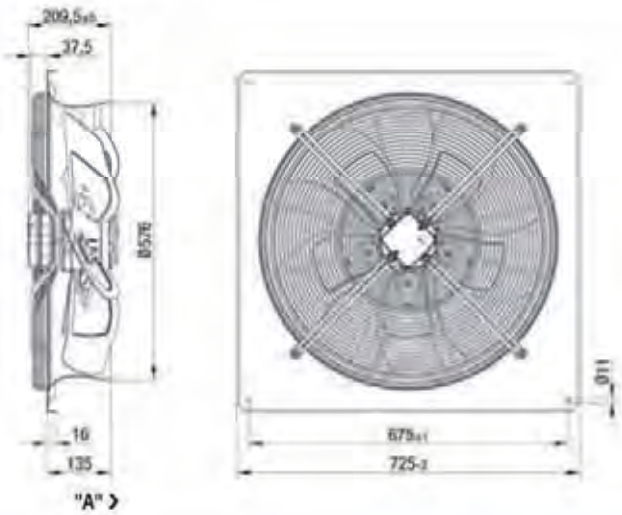

Type	Mass [kg]
W4D 560-DF03 -02	20.3
W4D 560-DB01 -02	21.8
W6D 560-DG03 -02	18.3
W6D 560-DH03 -02	18.3
W4E 560-DB01 -02	21.8
W6E 560-DE01 -02	20.3

With guard grille for full nozzle

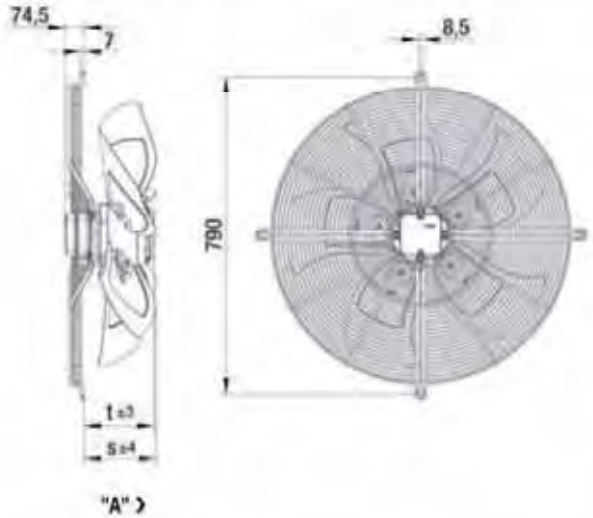

Type	Mass [kg]	s	t
S4D 560-BF03 -02	14.0	134.0	124.0
S4D 560-BB01 -02	15.5	149.0	132.0
S6D 560-BG03 -02	12.0	114.0	139.0
S6D 560-BH03 -02	12.0	114.0	132.0
S4E 560-BB01 -02	15.5	149.0	132.0
S6E 560-BE01 -02	14.0	134.0	132.0

With guard grille for short nozzle

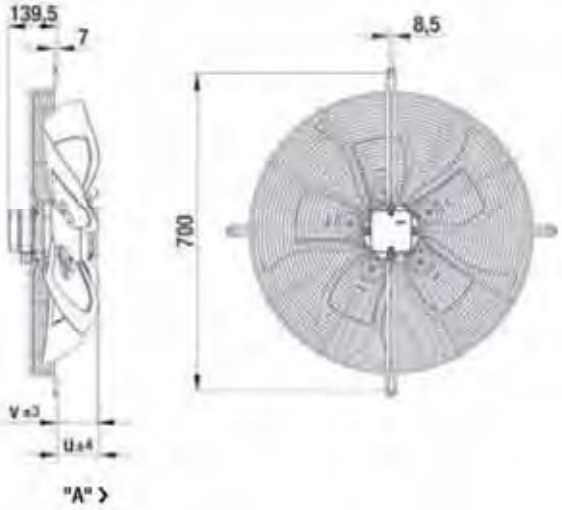

Type	Mass [kg]	u	v
S4D 560-AF03 -02	14.5	59.0	69.0
S4D 560-AB01 -02	16.0	67.0	84.0
S6D 560-AG03 -02	12.5	74.0	49.0
S6D 560-AH03 -02	12.5	67.0	49.0
S4E 560-AB01 -02	16.0	67.0	84.0
S6E 560-AE01 -02	14.5	67.0	69.0

AC axial fans

S series, Ø 630

- **Material:** Guard grille: Steel, phosphated and coated in black plastic
  Wall ring: Sheet steel, pre-galvanised and coated in black plastic
  Blades: Die-cast aluminium
  Rotor: Encased in aluminium
- **Number of blades:** 5
- **Direction of rotation:** Direction of air flow "V" clockwise, direction of air flow "A" counter-clockwise, seen on rotor
- **Type of protection:** IP 54 (acc. to EN 60529)
- **Insulation class:** "F"
- **Mounting position:** Any
- **Condensate discharge holes:** On rotor and stator side
- **Mode of operation:** Continuous operation (S1)
- **Bearings:** Maintenance-free ball bearings

Nominal data		Blade angle	Curve	Nominal voltage	Frequency	Speed/rpm (1)	Max. power input (1)	Max. current draw (1)	Capacitor	Max. operative range	Perm. amb. temp.	Electr. connection
Type	Motor			VAC	Hz	rpm	kW	A	µF/VDB	Pa	°C	p. 416 f.
*4D 630	M4D138-HF	-5°	Ⓐ	3~ 400 Δ	50	1330	1.94	3.40	—	200	-40 to +65	F1b)/F2b)
			Ⓑ	3~ 400 Y	50	1040	1.29	2.20	—	120	-40 to +65	
*4D 630	M4D138-HF	-10°	Ⓒ	3~ 400 Δ	50	1360	1.62	3.02	—	200	-40 to +65	F1b)/F2b)
			Ⓓ	3~ 400 Y	50	1120	1.12	1.87	—	130	-40 to +65	
*4D 630	M4D138-LA	0°	Ⓔ	3~ 400 Δ	50	1340	2.53	4.95	—	240	-40 to +60	F1b)/F2b)
			Ⓕ	3~ 400 Y	50	1045	1.64	2.88	—	145	-40 to +60	

subject to alterations

(1) Nominal data in operating point ❸ with maximum load

Curves

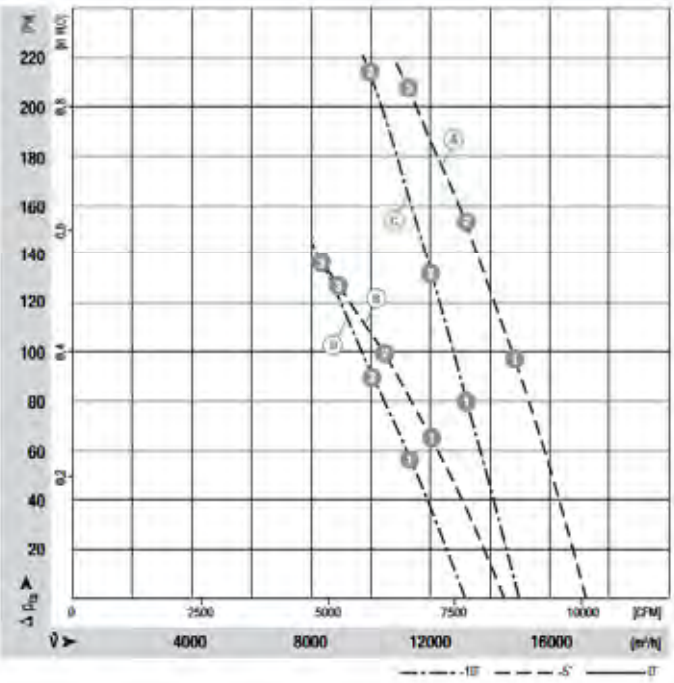

		n [rpm]	P_1 [kW]	I [A]	LW_A [dB(A)]
Ⓐ	❶	1350	1.66	3.03	79
Ⓐ	❷	1335	1.78	3.17	79
Ⓐ	❸	1330	1.94	3.40	81
Ⓑ	❶	1095	1.16	1.95	73
Ⓑ	❷	1065	1.22	2.04	73
Ⓑ	❸	1040	1.29	2.20	75
Ⓒ	❶	1390	1.29	2.58	80
Ⓒ	❷	1380	1.41	2.70	80
Ⓒ	❸	1360	1.62	3.02	83
Ⓓ	❶	1190	0.98	1.65	76
Ⓓ	❷	1160	1.04	1.75	75
Ⓓ	❸	1120	1.12	1.87	78

- **Motor protection:** Design with thermal overload protector
- **Cable exit:** Via terminal box
- **Protection class:** I (acc. to EN 61800-5-1)
- **Product conforming to standard:** CE
- **Approvals:** VDE (acc. to EN 60034)

Direction of air flow	< "V"/"A" > Without attachments	< "V"/"A" > With full square nozzle	< "V" With guard grille for full nozzle	< "V" With guard grille for short nozzle	"A" > With guard grille for full nozzle	"A" > With guard grille for short nozzle	< "V" In-line duct fan
"V"	A4D 630-AN01 -01	W4D630-GN01 -01	S4D 630-CN01 -01	S4D 630-AN01 -01	—	—	W4D630-IN01 -01
"A"	A4D 630-AN01 -02	W4D630-DN01 -02	—	—	S4D 630-BN01 -02	—	—
"V"	A4D 630-A001 -01	W4D630-G001 -01	S4D 630-C001 -01	S4D 630-A001 -01	—	—	—
"A"	A4D 630-A001 -02	W4D630-D001 -02	—	—	S4D 630-B001 -02	—	—
"V"	A4D 630-AJ01 -01	W4D630-GJ01 -01	S4D 630-CJ01 -01	S4D 630-AJ01 -01	—	—	—
"A"	A4D 630-AJ01 -02	W4D630-DJ01 -02	—	—	S4D 630-BJ01 -02	—	—

Curves

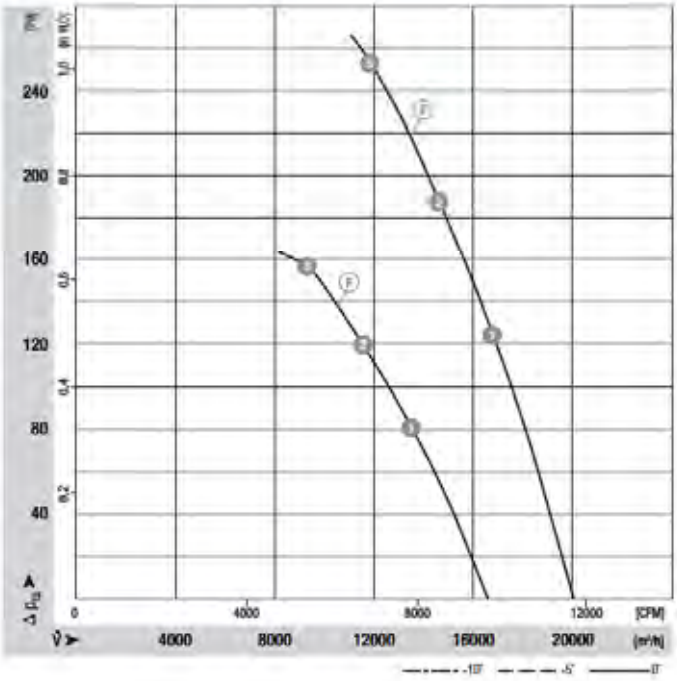

	n [rpm]	P_1 [kW]	I [A]	LW_A [dB(A)]
F 1	1355	2.28	4.43	78
F 2	1345	2.40	4.63	79
F 3	1340	2.53	4.95	81
F 1	1085	1.56	2.73	72
F 2	1065	1.61	2.82	73
F 3	1045	1.64	2.88	75

AC axial fans

S series, Ø 630, drawings for direction of air flow "V"

Without attachments

Type	Mass [kg]	c	d	g
A4D 630-AN01 -01	20.0	147.0	133.0	251.0
A4D 630-A001 -01	20.0	142.0	118.0	251.0
A4D 630-AJ01 -01	24.0	152.0	147.0	276.0

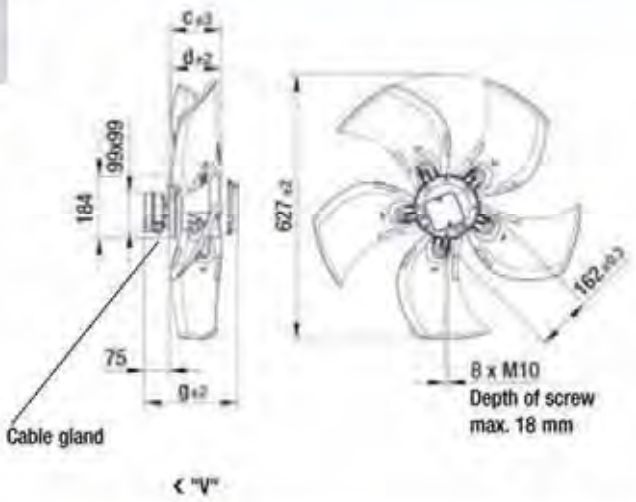

With full square nozzle

Type	Mass [kg]
W4D630-GN01 -01	37.0
W4D630-G001 -01	37.0
W4D630-GJ01 -01	41.0

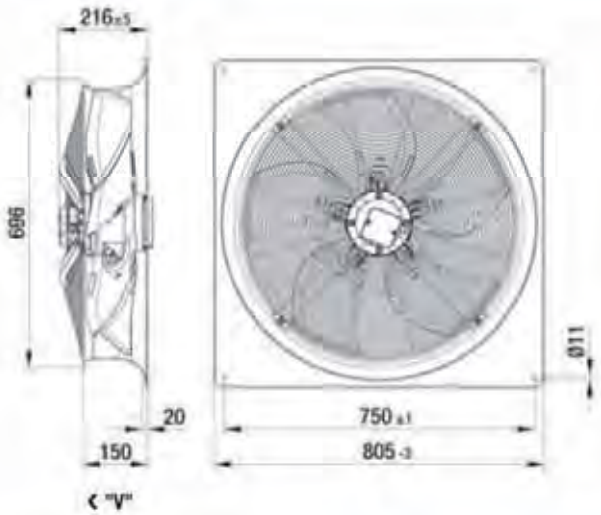

With guard grille for full nozzle

Type	Mass [kg]	s	t
S4D 630-CN01 -01	28.0	146.0	175.0
S4D 630-C001 -01	28.0	141.0	175.0
S4D 630-CJ01 -01	32.0	76.0	151.0

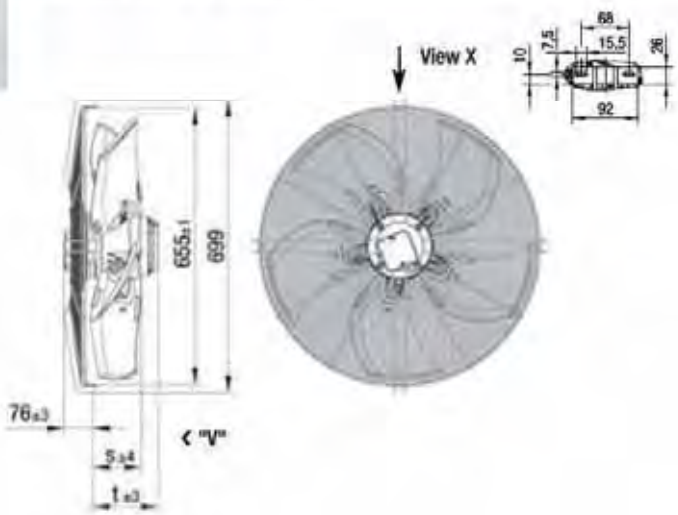

ebmpapst

With guard grille for short nozzle

Type	Mass [kg]	u	v
S4D 630-AN01 -01	29.5	80.0	109.0
S4D 630-A001 -01	29.5	75.0	109.0
S4D 630-AJ01 -01	33.5	85.0	134.0

< "V"

In-line duct fan

Type	Mass [kg]
W4D630-IN01 -01	27.9

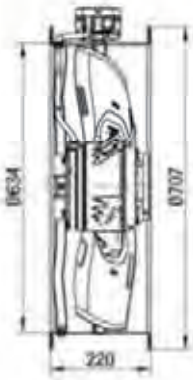

< "V"

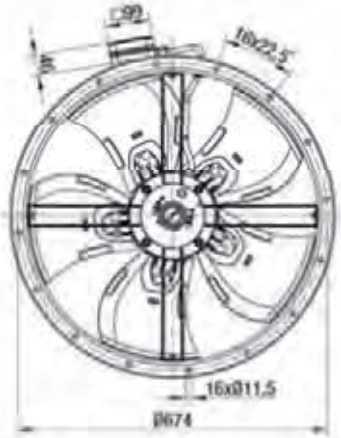

AC axial fans

S series, Ø 630, drawings for direction of air flow "A"

Without attachments

Type	Mass [kg]	c	d	g
A4D 630-AN01 -02	20.0	175.0	133.0	251.0
A4D 630-A001 -02	20.0	165.0	118.0	251.0
A4D 630-AJ01 -02	24.0	185.0	147.0	276.0

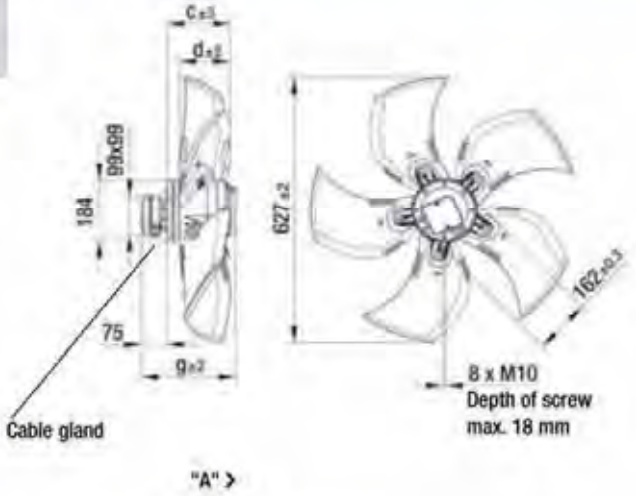

With full square nozzle

Type	Mass [kg]
W4D630-DN01 -02	38.0
W4D630-D001 -02	38.0
W4D630-DJ01 -02	42.0

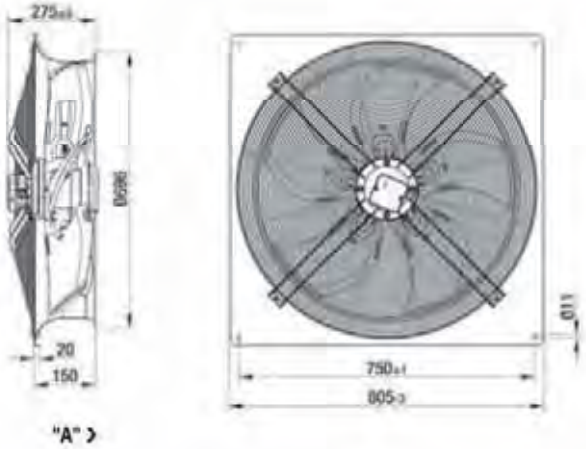

With guard grille for full nozzle

Type	Mass [kg]	s	t
S4D 630-BN01 -02	29.0	126.0	127.0
S4D 630-B001 -02	29.0	116.0	127.0
S4D 630-BJ01 -02	33.0	136.0	152.0

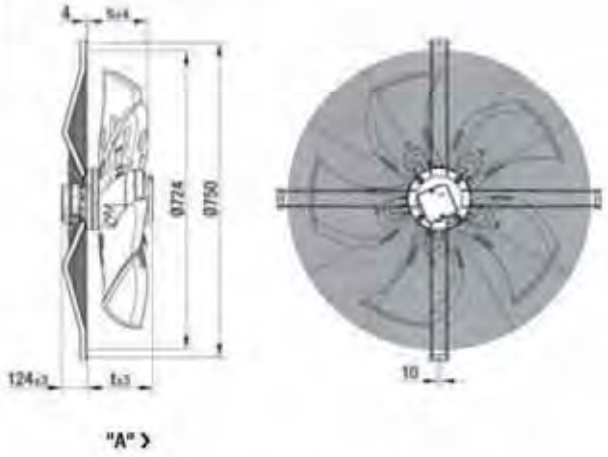

ebmpapst

AC axial fans

S series, Ø 630

- **Material:** Guard grille: Steel, phosphated and coated in black plastic
  Wall ring: Sheet steel, pre-galvanised and coated in black plastic
  Blades: Sheet aluminium
  Rotor: Encased in aluminium
- **Number of blades:** 5
- **Direction of rotation:** Direction of air flow "V" counter-clockwise, direction of air flow "A" clockwise, seen on rotor
- **Type of protection:** IP 54 (acc. to EN 60529)
- **Insulation class:** "F"
- **Mounting position:** Any
- **Condensate discharge holes:** On rotor and stator side
- **Mode of operation:** Continuous operation (S1)
- **Bearings:** Maintenance-free ball bearings

Nominal data		Blade angle	Curve	Nominal voltage	Frequency	Speed/rpm (1)	Max. power input (1)	Max. current draw (1)	Capacitor	Max. operative range	Perm. amb. temp.	Electr. connection
Type	Motor			VAC	Hz	rpm	kW	A	µF/VDB	Pa	°C	p. 416 f.
*6D 630	M6D 110-GF	-5°	Ⓐ	3~ 400 Δ	50	890	0.61	1.26	—	105	-40 to +60	F1b)/F2b)
			Ⓑ	3~ 400 Y	50	680	0.40	0.72	—	60	-40 to +60	
*6D 630	M6D 110-GF	-10°	Ⓒ	3~ 400 Δ	50	910	0.53	1.15	—	110	-40 to +70	F1b)/F2b)
			Ⓓ	3~ 400 Y	50	725	0.38	0.67	—	70	-40 to +70	
*6D 630	M6D 110-IA	0°	Ⓔ	3~ 400 Δ	50	885	0.83	1.68	—	120	-40 to +55	F1b)/F2b)
			Ⓕ	3~ 400 Y	50	655	0.53	0.95	—	68	-40 to +55	
*8D 630	M8D 110-GF	0°	Ⓖ	3~ 400 Δ	50	640	0.38	0.91	—	62	-40 to +65	F1b)/F2b)
			Ⓗ	3~ 400 Y	50	440	0.21	0.42	—	30	-40 to +65	
*8D 630	M8D 110-GF	-5°	Ⓘ	3~ 400 Δ	50	660	0.33	0.85	—	65	-40 to +75	F1b)/F2b)
			Ⓙ	3~ 400 Y	50	500	0.20	0.40	—	35	-40 to +75	

subject to alterations

(1) Nominal data in operating point ◯ with maximum load

Curves

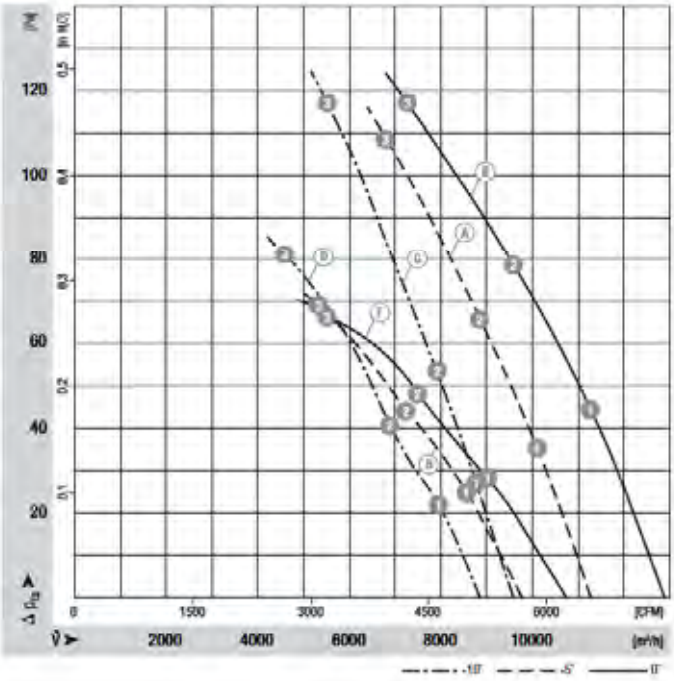

	n [rpm]	P_1 [kW]	I [A]	Lw_A [dB(A)]
Ⓐ ❶	925	0.48	1.12	75
Ⓐ ❷	915	0.52	1.16	75
Ⓐ ❸	890	0.61	1.26	76
Ⓑ ❶	770	0.35	0.63	72
Ⓑ ❷	745	0.37	0.66	71
Ⓑ ❸	680	0.40	0.72	71
Ⓒ ❶	940	0.41	1.04	75
Ⓒ ❷	930	0.45	1.06	75
Ⓒ ❸	910	0.53	1.15	78
Ⓓ ❶	825	0.29	0.52	73
Ⓓ ❷	805	0.31	0.55	72
Ⓓ ❸	725	0.38	0.67	74
Ⓔ ❶	915	0.67	1.48	75
Ⓔ ❷	905	0.72	1.54	76
Ⓔ ❸	885	0.83	1.68	76
Ⓕ ❶	735	0.47	0.83	71
Ⓕ ❷	710	0.49	0.86	71
Ⓕ ❸	655	0.53	0.95	70

ebmpapst

- **Motor protection:** Design with thermal overload protector
- **Cable exit:** Via terminal box
- **Protection class:** I (acc. to EN 61800-5-1)
- **Product conforming to standard:** CE
- **Approvals:** VDE (acc. to EN 60034)

Direction of air flow	< "V"/"A" >	< "V"/"A" >	< "V"	< "V"	"A" >	"A" >	< "V"
	Without attachments	With full square nozzle	With guard grille for full nozzle	With guard grille for short nozzle	With guard grille for full nozzle	With guard grille for short nozzle	In-line duct fan
"V"	A6D 630-AE01 -01	W6D630-GE01 -01	S6D 630-CE01 -01	S6D 630-AE01 -01	—	—	—
"A"	A6D 630-AE01 -02	W6D630-DE01 -02	—	—	S6D 630-BE01 -02	S6D 630-AE01 -02	—
"V"	A6D 630-AF01 -01	W6D630-GF01 -01	S6D 630-CF01 -01	S6D 630-AF01 -01	—	—	—
"A"	A6D 630-AF01 -02	W6D630-DF01 -02	—	—	S6D 630-BF01 -02	S6D 630-AF01 -02	—
"V"	A6D 630-AA01 -01	W6D630-GA01 -01	S6D 630-CA01 -01	S6D 630-AA01 -01	—	—	W6D630-IA01 -01
"A"	A6D 630-AA01 -02	W6D630-DA01 -02	—	—	S6D 630-BA01 -02	S6D 630-AA01 -02	—
"V"	A8D 630-AD01 -01	W8D630-GD01 -01	S8D 630-CD01 -01	S8D 630-AD01 -01	—	—	—
"A"	A8D 630-AD01 -02	W8D630-DD01 -02	—	—	S8D 630-BD01 -02	S8D 630-AD01 -02	—
"V"	A8D 630-AE01 -01	W8D630-GE01 -01	S8D 630-CE01 -01	S8D 630-AE01 -01	—	—	—
"A"	A8D 630-AE01 -02	W8D630-DE01 -02	—	—	S8D 630-BE01 -02	S8D 630-AE01 -02	—

Curves

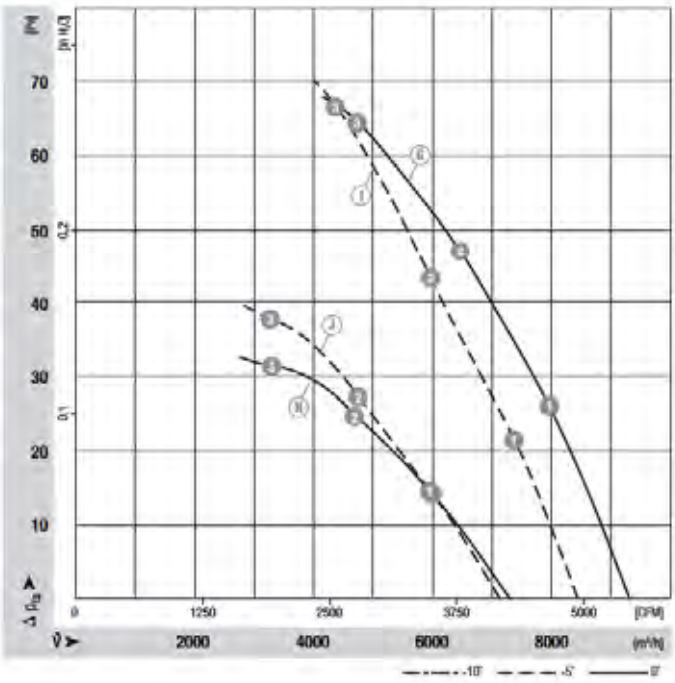

	n [rpm]	P_1 [kW]	I [A]	Lw_A [dB(A)]
⑥ ❶	660	0.33	0.84	69
⑥ ❷	655	0.35	0.85	69
⑥ ❸	640	0.38	0.91	69
⑩ ❶	495	0.19	0.40	63
⑩ ❷	475	0.20	0.41	62
⑩ ❸	440	0.21	0.42	61
① ❶	680	0.28	0.81	69
① ❷	675	0.30	0.82	70
① ❸	660	0.33	0.85	71
② ❶	555	0.17	0.36	71
② ❷	535	0.18	0.38	71
② ❸	500	0.20	0.40	71

AC axial fans

S series, Ø 630

- **Material:** Guard grille: Steel, phosphated and coated in black plastic
  Wall ring: Sheet steel, pre-galvanised and coated in black plastic
  Blades: Sheet aluminium
  Rotor: Encased in aluminium
- **Number of blades:** 5
- **Direction of rotation:** Direction of air flow "V" counter-clockwise, direction of air flow "A" clockwise, seen on rotor
- **Type of protection:** IP 54 (acc. to EN 60529)
- **Insulation class:** "F"
- **Mounting position:** Any
- **Condensate discharge holes:** On rotor and stator side
- **Mode of operation:** Continuous operation (S1)
- **Bearings:** Maintenance-free ball bearings

Nominal data		Blade angle	Curve	Nominal voltage	Frequency	Speed/rpm (1)	Max. power input (1)	Max. current draw (1)	Capacitor	Max. operative range	Perm. amb. temp.	Electr. connection
Type	Motor			VAC	Hz	rpm	kW	A	µF/VDB	Pa	°C	p. 416 f.
*6E 630	M6E 110-GF	-5°	Ⓐ	1~ 230	50	880	0.61	2.65	14.0/450	100	-40 to +60	A2b)
*6E 630	M6E 110-GF	-10°	Ⓑ	1~ 230	50	905	0.49	2.15	12.0/450	100	-40 to +70	A2b)
*6E 630	M6E 110-IA	0°	Ⓒ	1~ 230	50	860	0.76	3.35	16.0/450	100	-40 to +50	A2b)
*8E 630	M8E 110-GF	-5°	Ⓓ	1~ 230	50	655	0.35	1.79	7.0/450	60	-40 to +60	A2b)

Subject to alterations

(1) Nominal data in operating point ☐ with maximum load

Curves

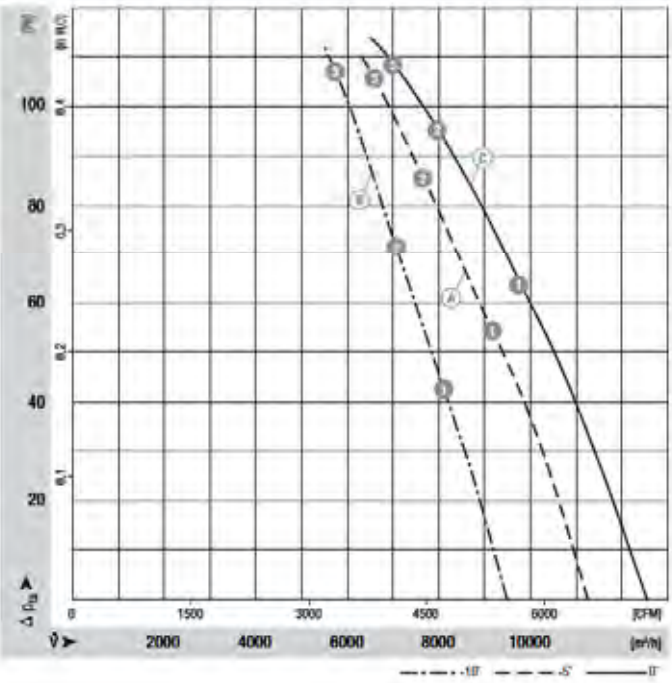

	n [rpm]	P_1 [kW]	I [A]	Lw_A [dB(A)]
Ⓐ ❶	905	0.55	2.41	75
Ⓐ ❷	895	0.58	2.51	75
Ⓐ ❸	880	0.61	2.65	76
Ⓑ ❶	925	0.43	1.89	75
Ⓑ ❷	920	0.45	1.99	76
Ⓑ ❸	905	0.49	2.15	78
Ⓒ ❶	890	0.71	3.11	76
Ⓒ ❷	875	0.73	3.23	76
Ⓒ ❸	860	0.76	3.35	76

ebmpapst

- **Motor protection:** Design with thermal overload protector
- **Cable exit:** Via terminal box
- **Protection class:** I (acc. to EN 61800-5-1)
- **Product conforming to standard:** CE
- **Approvals:** VDE (acc. to EN 60034)

Direction of air flow	❮ "V"/"A" ❯ Without attachments	❮ "V"/"A" ❯ With full square nozzle	❮ "V" With guard grille for full nozzle	❮ "V" With guard grille for short nozzle	"A" ❯ With guard grille for full nozzle	"A" ❯ With guard grille for short nozzle	❮ "V" In-line duct fan
"V"	A6E 630-AE01 -01	W6E 630-GE01 -01	S6E 630-CE01 -01	S6E 630-AE01 -01	—	—	—
"A"	A6E 630-AE01 -02	W6E 630-DE01 -02	—	—	S6E 630-BE01 -02	S6E 630-AE01 -02	—
"V"	A6E 630-AF01 -01	W6E 630-GF01 -01	S6E 630-CF01 -01	S6E 630-AF01 -01	—	—	—
"A"	A6E 630-AF01 -02	W6E 630-DF01 -02	—	—	S6E 630-BF01 -02	S6E 630-AF01 -02	—
"V"	A6E 630-AA03 -01	W6E 630-GA03 -01	S6E 630-CA03 -01	S6E 630-AA03 -01	—	—	W6E 630-IA03 -01
"A"	A6E 630-AA03 -02	W6E 630-DA03 -02	—	—	S6E 630-BA03 -02	S6E 630-AA03 -02	—
"V"	A8E 630-AE01 -01	W8E 630-GE01 -01	S8E 630-CE01 -01	S8E 630-AE01 -01	—	—	—
"A"	A8E 630-AE01 -02	W8E 630-DE01 -02	—	—	S8E 630-BE01 -02	S8E 630-AE01 -02	—

Curves

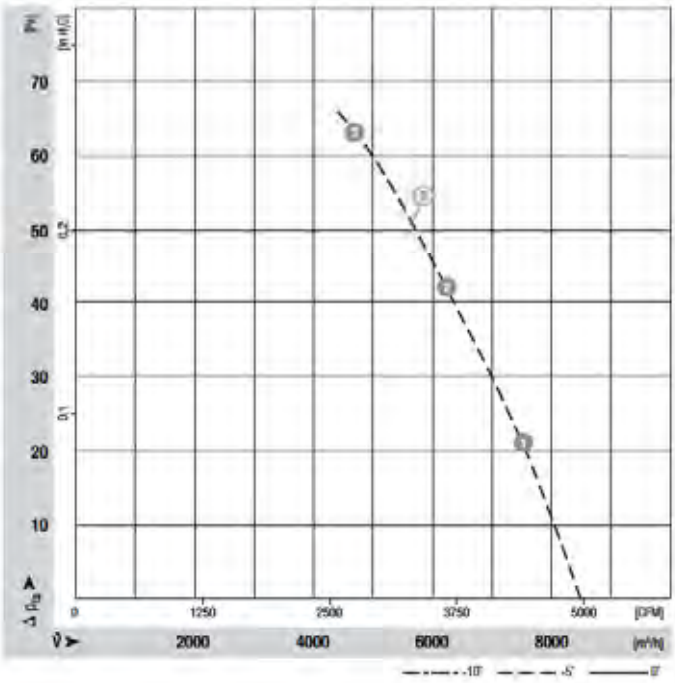

	n [rpm]	P_1 [kW]	I [A]	Lw_A [dB(A)]
⑤ ❶	685	0.30	1.61	69
⑤ ❷	675	0.32	1.68	69
⑤ ❸	655	0.35	1.79	69

AC axial fans

S series, Ø 630, drawings for direction of air flow "V"

Without attachments

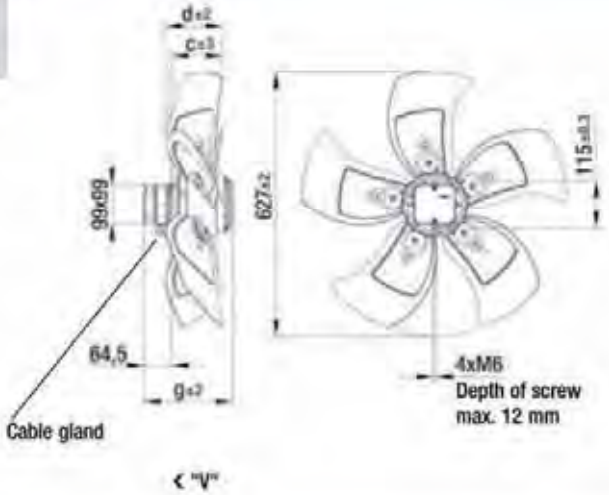

Type	Mass [kg]	c	d	g
A6D 630-AE01 -01	12.5	108.0	116.0	208.5
A6D 630-AF01 -01	12.5	96.0	96.0	208.5
A6D 630-AA01 -01	14.0	120.0	135.0	223.5
A8D 630-AD01 -01	12.5	120.0	135.0	208.5
A8D 630-AE01 -01	12.5	108.0	116.0	208.5
A6E 630-AE01 -01	12.5	108.0	116.0	208.5
A6E 630-AF01 -01	12.5	96.0	96.0	208.5
A6E 630-AA03 -01	14.0	120.0	135.0	223.5
A8E 630-AE01 -01	12.5	108.0	116.0	208.5

With full square nozzle

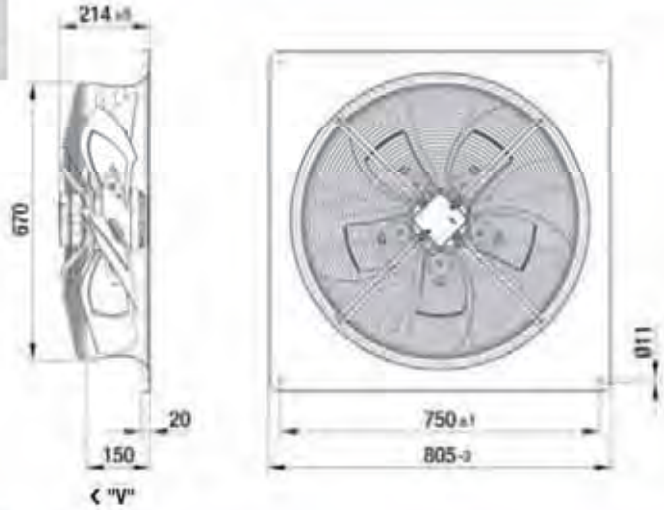

Type	Mass [kg]
W6D 630-GE01 -01	20.5
W6D 630-GF01 -01	20.5
W6D 630-GA01 -01	23.0
W8D 630-GD01 -01	20.5
W8D 630-GE01 -01	20.5
W6E 630-GE01 -01	20.5
W6E 630-GF01 -01	20.5
W6E 630-GA03 -01	23.0
W8E 630-GE01 -01	20.5

With guard grille for full nozzle

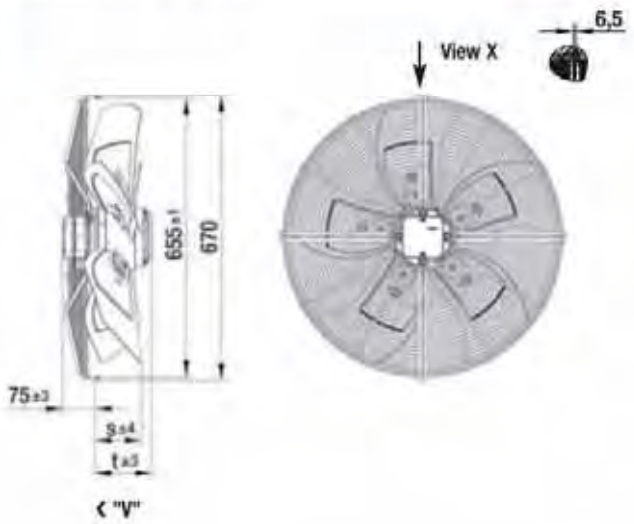

Type	Mass [kg]	s	t
S6D 630-CE01 -01	14.5	97.5	111.5
S6D 630-CF01 -01	14.5	85.5	111.5
S6D 630-CA01 -01	17.0	109.5	126.5
S8D 630-CD01 -01	14.5	109.5	133.5
S8D 630-CE01 -01	14.5	97.5	111.5
S6E 630-CE01 -01	14.5	97.5	133.5
S6E 630-CF01 -01	14.5	85.5	111.5
S6E 630-CA03 -01	17.0	109.5	148.5
S8E 630-CE01 -01	14.5	97.5	133.5

With guard grille for short nozzle

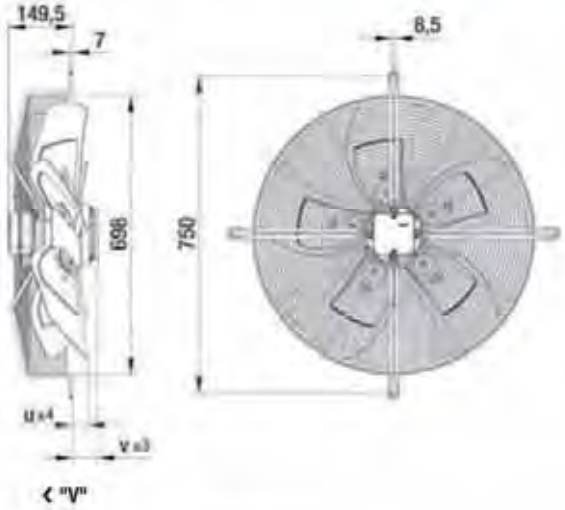

Type	Mass [kg]	u	v
S6D 630-AE01 -01	16.0	23.0	59.0
S6D 630-AF01 -01	16.0	11.0	59.0
S6D 630-AA01 -01	18.5	35.0	74.0
S8D 630-AD01 -01	16.0	35.0	59.0
S8D 630-AE01 -01	16.0	23.0	59.0
S6E 630-AE01 -01	16.0	23.0	59.0
S6E 630-AF01 -01	16.0	11.0	59.0
S6E 630-AA03 -01	18.5	35.0	74.0
S8E 630-AE01 -01	16.0	23.0	59.0

In-line duct fan

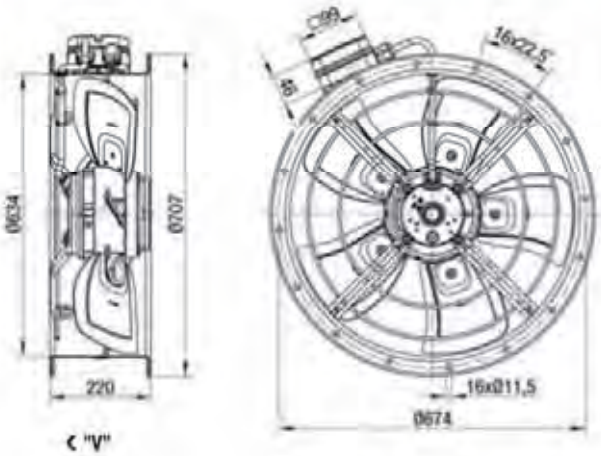

Type	Mass [kg]
W6D 630-IA01 -01	21.4
W6E 630-IA03 -01	21.4

AC axial fans

S series, Ø 630, drawings for direction of air flow "A"

Without attachments

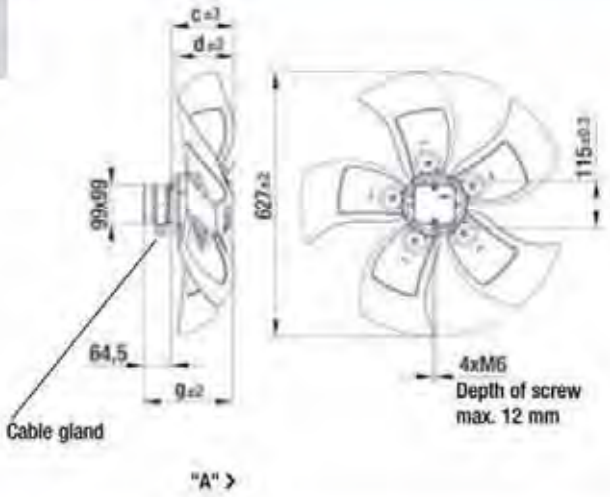

Type	Mass [kg]	c	d	g
A6D 630-AE01 -02	12.5	142.0	116.0	208.5
A6D 630-AF01 -02	12.5	134.0	96.0	208.5
A6D 630-AA01 -02	14.0	149.0	135.0	223.5
A8D 630-AD01 -02	12.5	149.0	135.0	208.5
A8D 630-AE01 -02	12.5	142.0	116.0	208.5
A6E 630-AE01 -02	12.5	142.0	116.0	208.5
A6E 630-AF01 -02	12.5	134.0	96.0	208.5
A6E 630-AA03 -02	14.0	149.0	135.0	223.5
A8E 630-AE01 -02	12.5	142.0	116.0	208.5

With full square nozzle

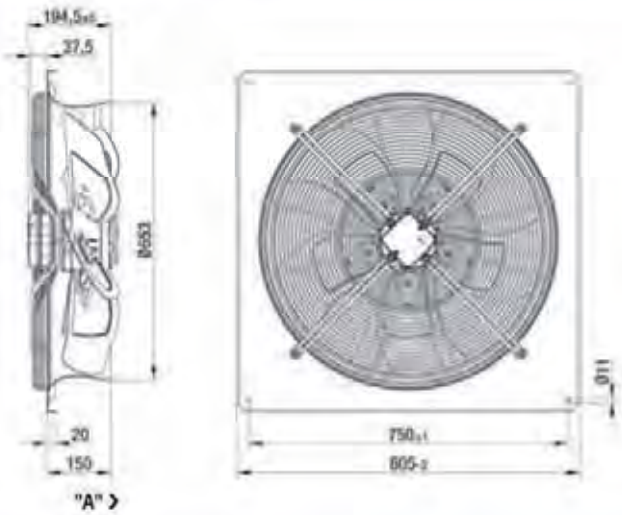

Type	Mass [kg]
W6D 630-DE01 -02	21.0
W6D 630-DF01 -02	21.0
W6D 630-DA01 -02	23.5
W8D 630-DD01 -02	21.0
W8D 630-DE01 -02	21.0
W6E 630-DE01 -02	21.0
W6E 630-DF01 -02	21.0
W6E 630-DA03 -02	23.5
W8E 630-DE01 -02	21.0

With guard grille for full nozzle

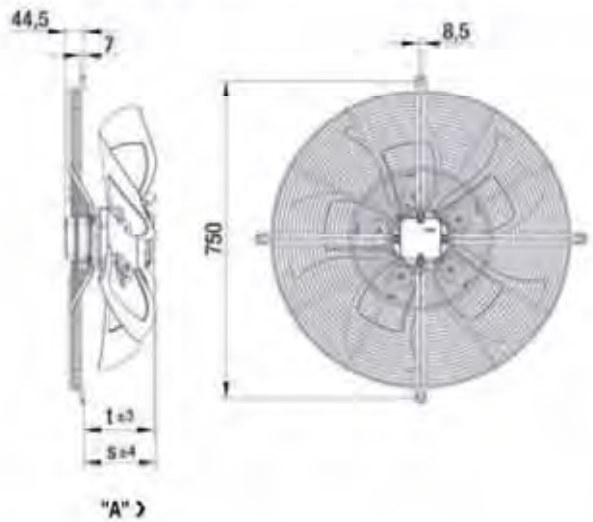

Type	Mass [kg]	s	t
S6D 630-BE01 -02	14.5	164.0	162.0
S6D 630-BF01 -02	14.5	164.0	154.0
S6D 630-BA01 -02	17.0	179.0	169.0
S8D 630-BD01 -02	14.5	164.0	169.0
S8D 630-BE01 -02	14.5	164.0	162.0
S6E 630-BE01 -02	14.5	164.0	162.0
S6E 630-BF01 -02	14.5	164.0	154.0
S6E 630-BA03 -02	17.0	179.0	169.0
S8E 630-BE01 -02	14.5	164.0	162.0

With guard grille for short nozzle

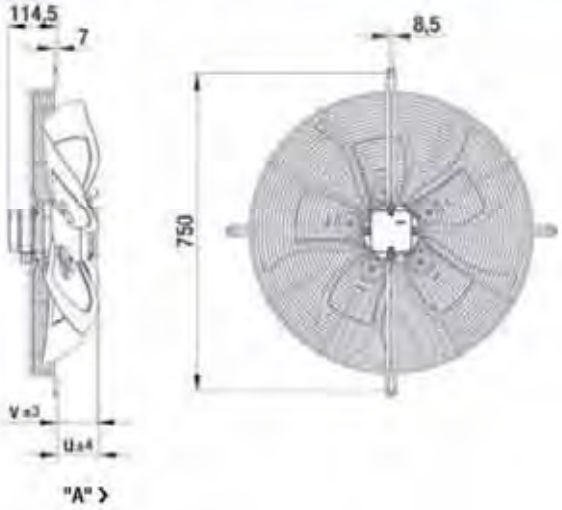

Type	Mass [kg]	u	v
S6D 630-AE01 -02	15.0	92.0	94.0
S6D 630-AF01 -02	15.0	84.0	94.0
S6D 630-AA01 -02	17.5	99.0	109.0
S8D 630-AD01 -02	15.0	99.0	94.0
S8D 630-AE01 -02	15.0	92.0	94.0
S6E 630-AE01 -02	15.0	92.0	94.0
S6E 630-AF01 -02	15.0	84.0	94.0
S6E 630-AA03 -02	17.5	99.0	109.0
S8E 630-AE01 -02	15.0	92.0	94.0

AC axial fans

S series, Ø 710

- **Material:** Guard grille: Steel, phosphated and coated in black plastic
  Wall ring: Sheet steel, pre-galvanised and coated in black plastic
  Blades: Die-cast aluminium
  Rotor: Encased in aluminium
- **Number of blades:** 5
- **Direction of rotation:** Direction of air flow "V" clockwise, direction of air flow "A" counter-clockwise, seen on rotor
- **Type of protection:** IP 54 (acc. to EN 60529)
- **Insulation class:** "F"
- **Mounting position:** Any
- **Condensate discharge holes:** On rotor and stator side
- **Mode of operation:** Continuous operation (S1)
- **Bearings:** Maintenance-free ball bearings

Nominal data		Blade angle	Curve	Nominal voltage	Frequency	Speed/rpm (1)	Max. power input (1)	Max. current draw (1)	Capacitor	Max. operative range	Perm. amb. temp.	Electr. connection
Type	Motor			VAC	Hz	rpm	kW	A	µF/VDB	Pa	°C	p. 416 f.
*4D 710	M4D138-LA	-10°	Ⓐ	3~ 400 Δ	50	1350	2.32	4.65	—	280	-40 to +70	F1b)/F2b)
			Ⓑ	3~ 400 Y	50	1090	1.59	2.78	—	180	-40 to +70	
*6D 710	M6D138-HF	-5°	Ⓒ	3~ 400 Δ	50	910	1.01	2.40	—	130	-40 to +80	F1b)/F2b)
			Ⓓ	3~ 400 Y	50	750	0.70	1.33	—	87	-40 to +80	

subject to alterations

(1) Nominal data in operating point ◯ with maximum load

Curves

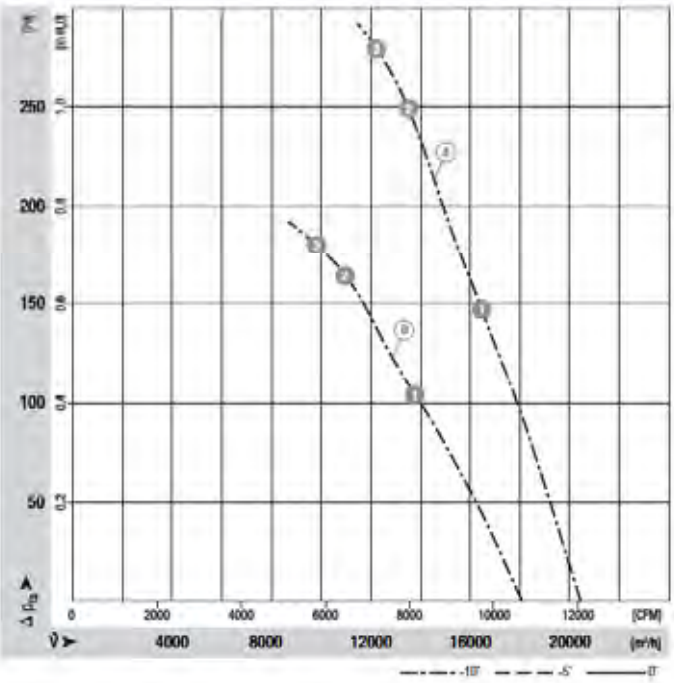

	n [rpm]	P_1 [kW]	I [A]	LW_A [dB(A)]
Ⓐ ❶	1380	1.96	4.13	82
Ⓐ ❷	1360	2.21	4.49	86
Ⓐ ❸	1350	2.32	4.65	87
Ⓑ ❶	1160	1.43	2.50	78
Ⓑ ❷	1110	1.55	2.70	80
Ⓑ ❸	1090	1.59	2.78	81

ebmpapst

- **Motor protection:** Design with thermal overload protector
- **Cable exit:** Via terminal box
- **Protection class:** I (acc. to EN 61800-5-1)
- **Product conforming to standard:** CE
- **Approvals:** VDE (acc. to EN 60034)

Direction of air flow	❮ "V"/"A" ❯ Without attachments	❮ "V"/"A" ❯ With full square nozzle	❮ "V" With guard grille for full nozzle	❮ "V" With guard grille for short nozzle	"A" ❯ With guard grille for full nozzle	"A" ❯ With guard grille for short nozzle	❮ "V" In-line duct fan
"V"	A4D 710-AL01 -01	W4D710-GL01 -01	S4D 710-CL01 -01	S4D 710-AL01 -01	—	—	W4D710-IL01 -01
"A"	A4D 710-AL01 -02	W4D710-DL01 -02	—	—	S4D 710-BL01 -02	—	—
"V"	A6D 710-AN01 -01	W6D710-GN01 -01	S6D 710-CN01 -01	S6D 710-AN01 -01	—	—	W6D710-IN01 -01
"A"	A6D 710-AN01 -02	W6D710-DN01 -02	—	—	S6D 710-BN01 -02	—	—

Curves

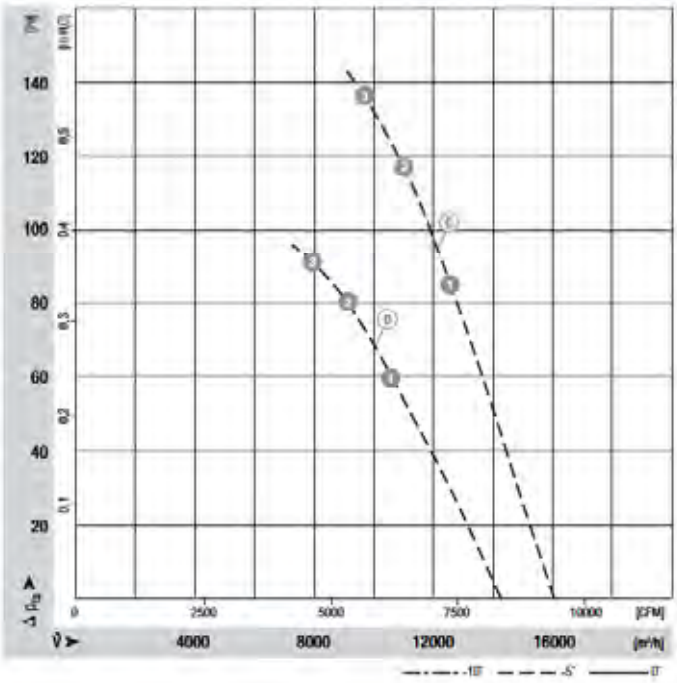

	n [rpm]	P_1 [kW]	I [A]	LW_A [dB(A)]
ⓒ ❶	925	0.91	2.32	72
ⓒ ❷	920	0.97	2.38	75
ⓒ ❸	910	1.01	2.40	77
ⓑ ❶	780	0.65	1.22	69
ⓑ ❷	765	0.68	1.27	71
ⓑ ❸	750	0.70	1.33	72

AC axial fans

S series, Ø 710, drawings for direction of air flow "V"

Without attachments

Type	Mass [kg]	g
A4D 710-AL01 -01	25.0	276.0
A6D 710-AN01 -01	21.0	251.0

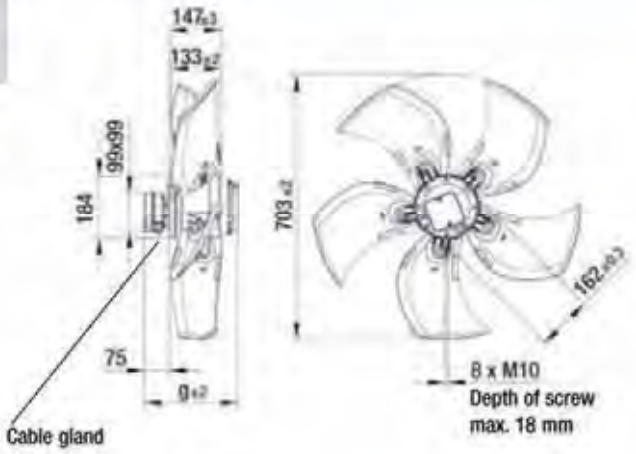

< "V"

With full square nozzle

Type	Mass [kg]
W4D710-GL01 -01	43.0
W6D710-GN01 -01	39.0

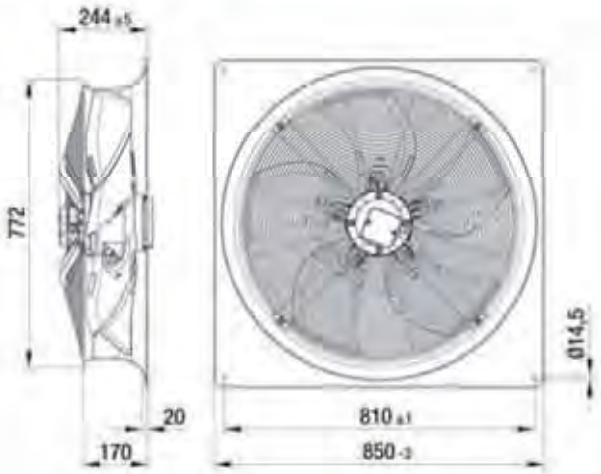

< "V"

With guard grille for full nozzle

Type	Mass [kg]	t
S4D 710-CL01 -01	34.0	193.5
S6D 710-CN01 -01	30.0	168.5

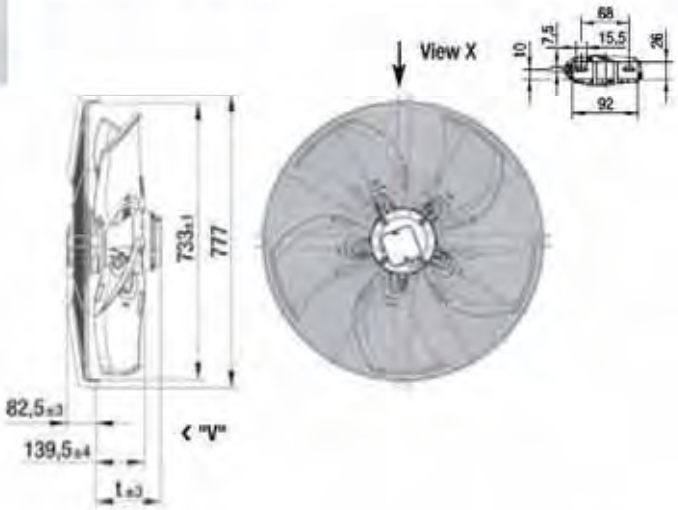

< "V"

ebmpapst

With guard grille for short nozzle

Type	Mass [kg]	u	v
S4D 710-AL01 -01	35.5	31.0	90.0
S6D 710-AN01 -01	31.5	27.0	65.0

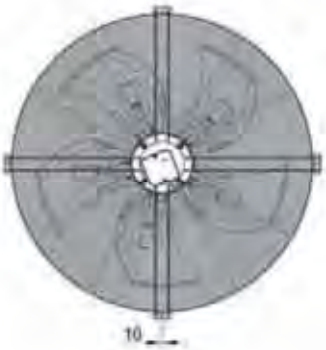

< "V"

In-line duct fan

Type	Mass [kg]
W4D710-IL01 -01	40.0
W6D710-IN01 -01	36.0

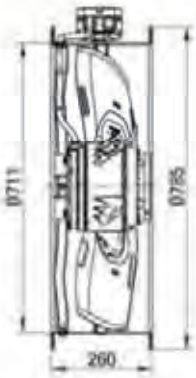

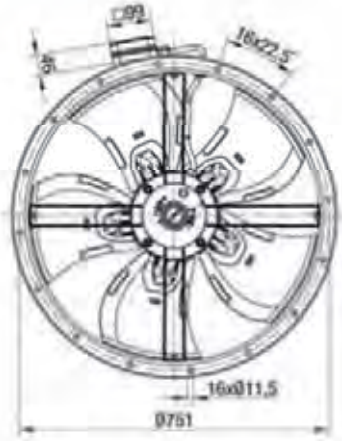

< "V"

AC axial fans

S series, Ø 710, drawings for direction of air flow "A"

Without attachments

Type	Mass [kg]	g
A4D 710-AL01 -02	25.0	276.0
A6D 710-AN01 -02	21.0	251.0

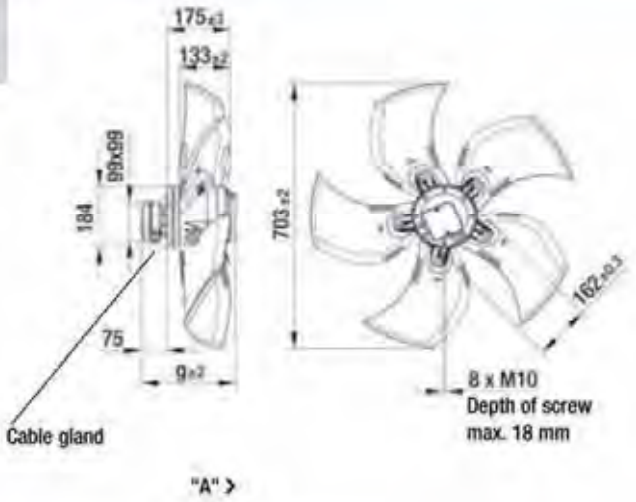

With full square nozzle

Type	Mass [kg]
W4D710-DL01 -02	44.0
W6D710-DN01 -02	40.0

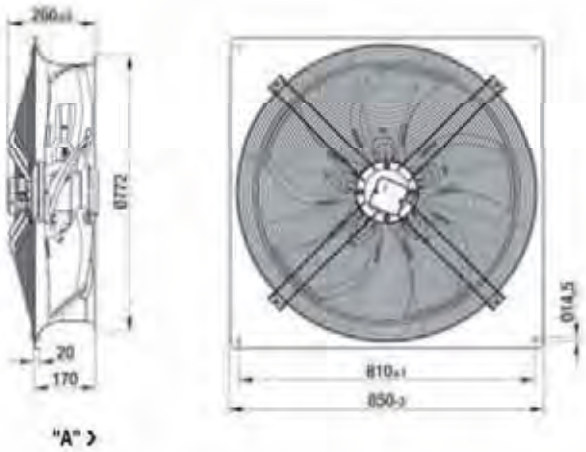

With guard grille for full nozzle

Type	Mass [kg]	s	t
S4D 710-BL01 -02	35.0	144.0	160.0
S6D 710-BN01 -02	32.0	154.0	155.0

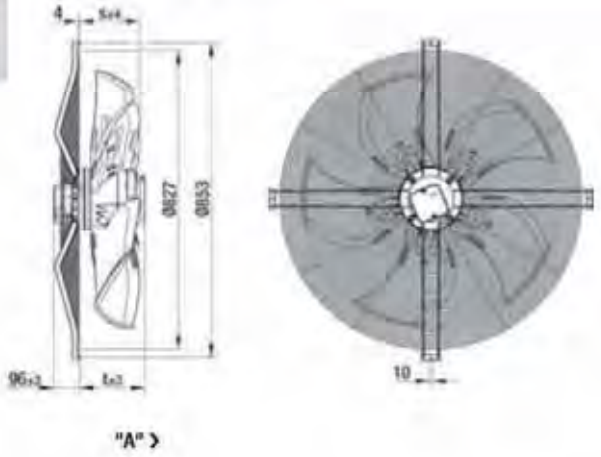

ebmpapst

AC axial fans

S series, Ø 800

- **Material:** Guard grille: Steel, phosphated and coated in black plastic
  Wall ring: Sheet steel, pre-galvanised and coated in black plastic
  Blades: Die-cast aluminium
  Rotor: Encased in aluminium
- **Number of blades:** 5
- **Direction of rotation:** Direction of air flow "V" clockwise, direction of air flow "A" counter-clockwise, seen on rotor
- **Type of protection:** IP 54 (acc. to EN 60529)
- **Insulation class:** "F"
- **Mounting position:** Any
- **Condensate discharge holes:** On rotor and stator side
- **Mode of operation:** Continuous operation (S1)
- **Bearings:** Maintenance-free ball bearings

Nominal data		Blade angle	Curve	Nominal voltage	Frequency	Speed/rpm (1)	Max. power input (1)	Max. current draw (1)	Capacitor	Max. operative range	Perm. amb. temp.	Electr. connection
Type	Motor			VAC	Hz	rpm	kW	A	µF/VDB	Pa	°C	p. 416 f.
*6D 800	M6D 138-HF	-5°	Ⓐ	3~ 400 Δ	50	870	1.45	3.20	—	150	-40 to +60	F1b)/F2b)
			Ⓑ	3~ 400 Y	50	610	0.81	1.64	—	75	-40 to +60	
*6D 800	M6D 138-HF	-10°	Ⓒ	3~ 400 Δ	50	895	1.14	2.45	—	160	-40 to +75	F1b)/F2b)
			Ⓓ	3~ 400 Y	50	710	0.75	1.45	—	98	-40 to +75	
*6D 800	M6D 138-LA	0°	Ⓔ	3~ 400 Δ	50	895	2.00	4.30	—	180	-40 to +60	F1b)/F2b)
			Ⓕ	3~ 400 Y	50	685	1.27	2.50	—	100	-40 to +60	
*6D 800	M6D 138-NA	+5°	Ⓖ	3~ 400 Δ	50	910	2.18	5.17	—	120	-40 to +55	F1b)/F2b)
			Ⓗ	3~ 400 Y	50	730	1.47	2.80	—	75	-40 to +55	
*6D 800	M6D 138-NA	0°	Ⓘ	3~ 400 Δ	50	915	2.08	4.62	—	180	-40 to +60	F1b)/F2b)
			Ⓙ	3~ 400 Y	50	740	1.43	2.66	—	118	-40 to +60	

subject to alterations

(1) Nominal data in operating point ◯ with maximum load

Curves

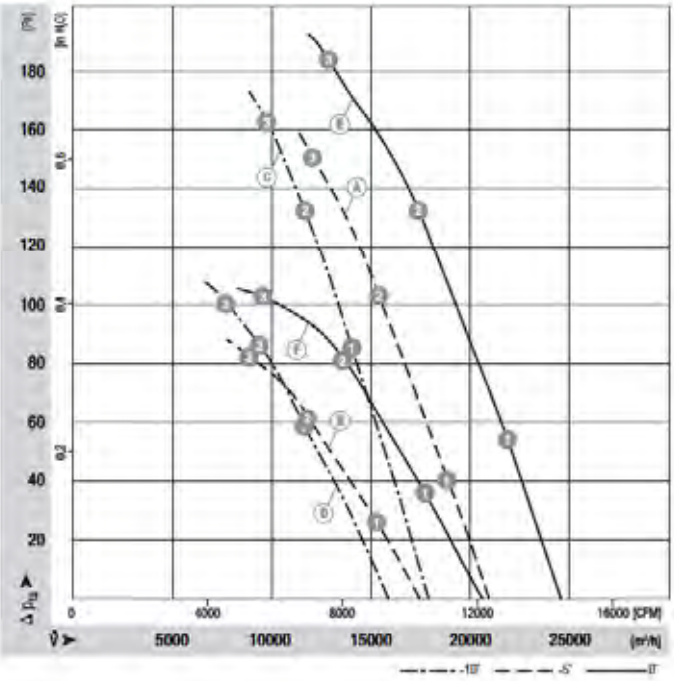

	n [rpm]	P_1 [kW]	I [A]	Lw_A [dB(A)]
Ⓐ ❶	910	1.07	2.50	72
Ⓐ ❷	890	1.23	2.69	72
Ⓐ ❸	870	1.45	3.20	74
Ⓑ ❶	745	0.72	1.35	68
Ⓑ ❷	690	0.79	1.49	66
Ⓑ ❸	610	0.81	1.64	67
Ⓒ ❶	920	0.94	2.29	74
Ⓒ ❷	910	1.04	2.40	75
Ⓒ ❸	895	1.14	2.45	78
Ⓓ ❶	770	0.66	1.24	70
Ⓓ ❷	735	0.71	1.34	70
Ⓓ ❸	710	0.75	1.45	71
Ⓔ ❶	915	1.55	3.48	71
Ⓔ ❷	900	1.75	3.72	72
Ⓔ ❸	895	2.00	4.30	78
Ⓕ ❶	750	1.08	2.02	68
Ⓕ ❷	705	1.16	2.17	67
Ⓕ ❸	685	1.27	2.50	72

- **Motor protection:** Design with thermal overload protector
- **Cable exit:** Via terminal box
- **Protection class:** I (acc. to EN 61800-5-1)
- **Product conforming to standard:** CE
- **Approvals:** VDE (acc. to EN 60034)

Direction of air flow	❮ "V"/"A" ❯ Without attachments	❮ "V"/"A" ❯ With full square nozzle	❮ "V" With guard grille for full nozzle	❮ "V" With guard grille for short nozzle	"A" ❯ With guard grille for full nozzle	"A" ❯ With guard grille for short nozzle	❮ "V" In-line duct fan
"V"	A6D 800-AN01 -01	W6D 800-GN01 -01	S6D 800-CN01 -01	S6D 800-AN01 -01	—	—	—
"A"	A6D 800-AN01 -02	W6D 800-DN01 -02	—	—	S6D 800-BN01 -02	—	—
"V"	A6D 800-A001 -01	W6D 800-G001 -01	S6D 800-C001 -01	S6D 800-A001 -01	—	—	—
"A"	A6D 800-A001 -02	W6D 800-D001 -02	—	—	S6D 800-B001 -02	—	—
"V"	A6D 800-AJ01 -01	W6D 800-GJ01 -01	S6D 800-CJ01 -01	S6D 800-AJ01 -01	—	—	W6D 800-IJ01 -01
"A"	A6D 800-AJ01 -02	W6D 800-DJ01 -02	—	—	S6D 800-BJ01 -02	—	—
"V"	A6D 800-AS01 -01	W6D 800-GS01 -01	S6D 800-CS01 -01	S6D 800-AS01 -01	—	—	—
"A"	A6D 800-AS01 -02	W6D 800-DS01 -02	—	—	S6D 800-BS01 -02	—	—
"V"	A6D 800-AP01 -01	W6D 800-GP01 -01	S6D 800-CP01 -01	S6D 800-AP01 -01	—	—	—
"A"	A6D 800-AP01 -02	W6D 800-DP01 -02	—	—	S6D 800-BP01 -02	—	—

Curves

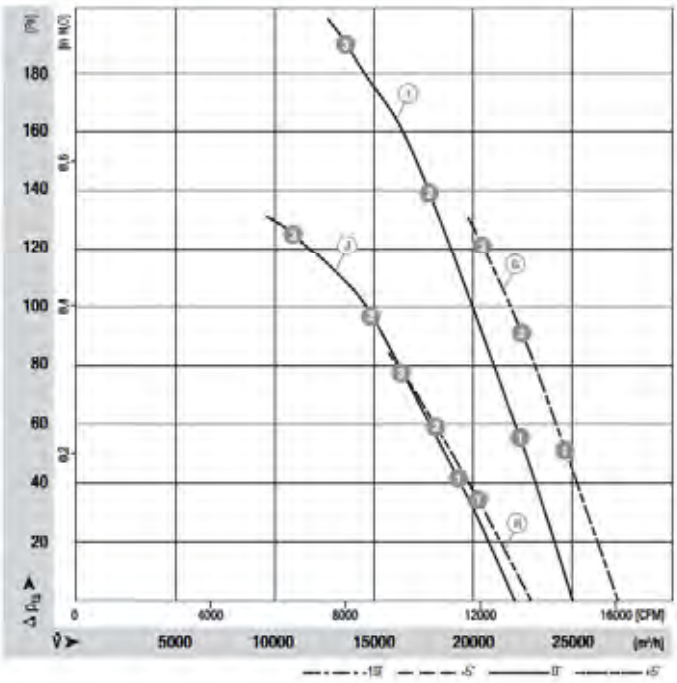

	n [rpm]	P_1 [kW]	I [A]	Lw_A [dB(A)]
⑥ ❶	920	2.01	4.99	74
⑥ ❷	915	2.11	5.15	74
⑥ ❸	910	2.18	5.17	75
⑧ ❶	755	1.40	2.68	69
⑧ ❷	740	1.44	2.75	69
⑧ ❸	730	1.47	2.80	71
① ❶	940	1.63	4.26	72
① ❷	925	1.85	4.47	73
① ❸	915	2.08	4.62	79
② ❶	810	1.22	2.25	69
② ❷	775	1.33	2.44	70
② ❸	740	1.43	2.66	73

AC axial fans

S series, Ø 800

- **Material:** Guard grille: Steel, phosphated and coated in black plastic
  Wall ring: Sheet steel, pre-galvanised and coated in black plastic
  Blades: Die-cast aluminium
  Rotor: Encased in aluminium
- **Number of blades:** 5
- **Direction of rotation:** Direction of air flow "V" clockwise, direction of air flow "A" counter-clockwise, seen on rotor
- **Type of protection:** IP 54 (acc. to EN 60529)
- **Insulation class:** "F"
- **Mounting position:** Any
- **Condensate discharge holes:** On rotor and stator side
- **Mode of operation:** Continuous operation (S1)
- **Bearings:** Maintenance-free ball bearings

Nominal data		Blade angle	Curve	Nominal voltage	Frequency	Speed/rpm (1)	Max. power input (1)	Max. current draw (1)	Capacitor	Max. operative range	Perm. amb. temp.	Electr. connection
Type	Motor			VAC	Hz	rpm	kW	A	µF/VDB	Pa	°C	p. 416 f.
*8D 800	M8D 138-HF	-5°	Ⓐ	3~ 400 Δ	50	680	0.79	2.15	—	100	-40 to +55	F1b)/F2b)
			Ⓑ	3~ 400 Y	50	540	0.48	1.05	—	60	-40 to +55	
*8D 800	M8D 138-LA	+5°	Ⓒ	3~ 400 Δ	50	665	1.05	2.70	—	80	-40 to +70	F1b)/F2b)
			Ⓓ	3~ 400 Y	50	500	0.63	1.31	—	45	-40 to +70	
*8D 800	M8D 138-LA	0°	Ⓔ	3~ 400 Δ	50	660	0.98	2.41	—	105	-40 to +65	F1b)/F2b)
			Ⓕ	3~ 400 Y	50	515	0.57	1.21	—	57	-40 to +65	
*ZD 800	MZD 138-HF	0°	Ⓖ	3~ 400 Δ	50	435	0.37	1.15	—	44	-40 to +80	F1b)/F2b)
			Ⓗ	3~ 400 Y	50	330	0.20	0.48	—	25	-40 to +80	

Subject to alterations

(1) Nominal data in operating point ☐ with maximum load

Curves

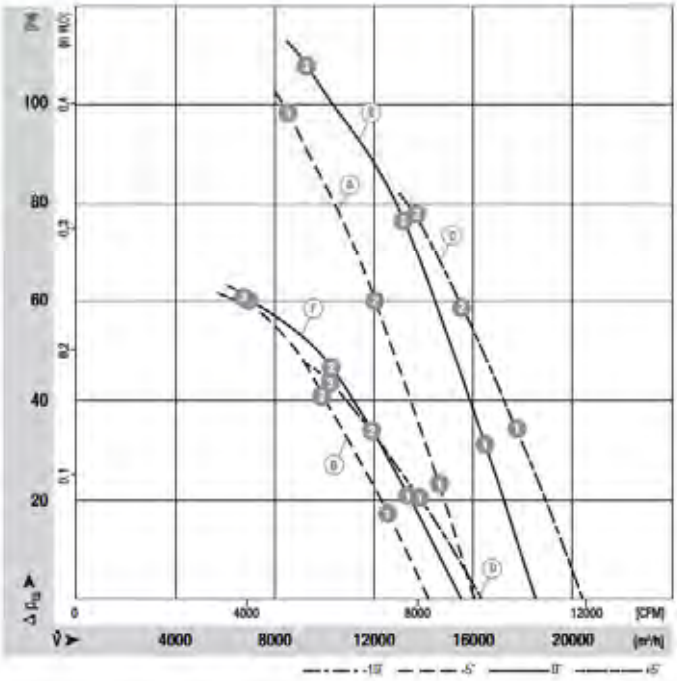

		n [rpm]	P_1 [kW]	I [A]	Lw_A [dB(A)]
Ⓐ	❶	700	0.60	2.08	67
Ⓐ	❷	690	0.68	2.10	67
Ⓐ	❸	680	0.79	2.15	71
Ⓑ	❶	605	0.40	0.87	64
Ⓑ	❷	575	0.44	0.94	63
Ⓑ	❸	540	0.48	1.05	65
Ⓒ	❶	680	0.96	2.57	68
Ⓒ	❷	670	1.01	2.61	69
Ⓒ	❸	665	1.05	2.70	71
Ⓓ	❶	525	0.60	1.26	63
Ⓓ	❷	510	0.62	1.29	63
Ⓓ	❸	500	0.63	1.31	64
Ⓔ	❶	690	0.76	2.21	67
Ⓔ	❷	680	0.85	2.28	67
Ⓔ	❸	660	0.98	2.41	71
Ⓕ	❶	560	0.50	1.06	63
Ⓕ	❷	530	0.54	1.13	62
Ⓕ	❸	515	0.57	1.21	64

ebmpapst

- **Motor protection:** Design with thermal overload protector
- **Cable exit:** Via terminal box
- **Protection class:** I (acc. to EN 61800-5-1)
- **Product conforming to standard:** CE
- **Approvals:** VDE (acc. to EN 60034)

Direction of air flow							
	❮ "V"/"A" ❯	❮ "V"/"A" ❯	❮ "V"	❮ "V"	"A" ❯	"A" ❯	❮ "V"
	Without attachments	**With full square nozzle**	**With guard grille for full nozzle**	**With guard grille for short nozzle**	**With guard grille for full nozzle**	**With guard grille for short nozzle**	**In-line duct fan**
"V"	A8D 800-AN01 -01	W8D 800-GN01 -01	S8D 800-CN01 -01	S8D 800-AN01 -01	—	—	—
"A"	A8D 800-AN01 -02	W8D 800-DN01 -02	—	—	S8D 800-BN01 -02	—	—
"V"	A8D 800-AT03 -01	W8D 800-GT03 -01	S8D 800-CT03 -01	S8D 800-AT03 -01	—	—	—
"A"	A8D 800-AT03 -02	W8D 800-DT03 -02	—	—	S8D 800-BT03 -02	—	—
"V"	A8D 800-AJ01 -01	W8D 800-GJ01 -01	S8D 800-CJ01 -01	S8D 800-AJ01 -01	—	—	—
"A"	A8D 800-AJ01 -02	W8D 800-DJ01 -02	—	—	S8D 800-BJ01 -02	—	—
"V"	AZD 800-AM03 -01	WZD 800-GM03 -01	SZD 800-CM03 -01	SZD 800-AM03 -01	—	—	—
"A"	AZD 800-AM03 -02	WZD 800-DM03 -02	—	SZD 800-BM03 -02	—	—	—

Curves

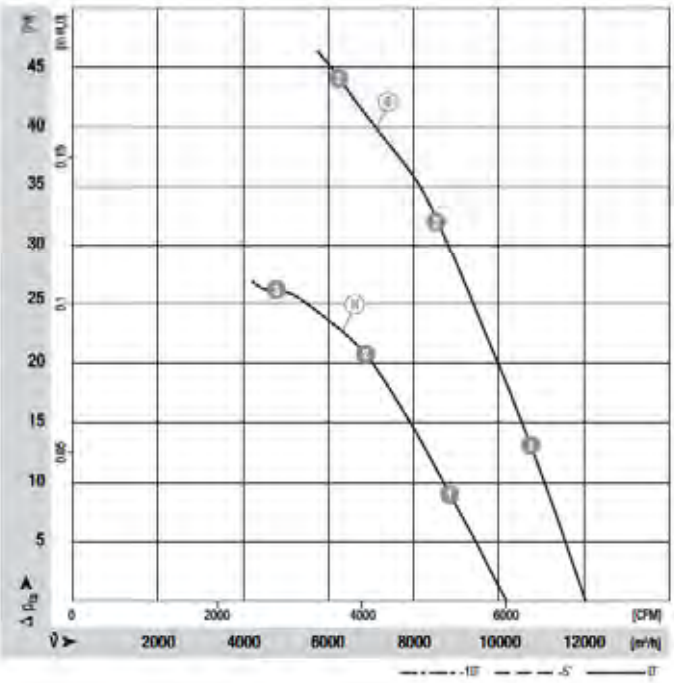

	n [rpm]	P_1 [kW]	I [A]	LW_A [dB(A)]
ⓐ ❶	455	0.31	1.09	59
ⓐ ❷	445	0.33	1.10	58
ⓐ ❸	435	0.37	1.15	61
ⓑ ❶	375	0.17	0.43	55
ⓑ ❷	360	0.18	0.45	55
ⓑ ❸	330	0.20	0.48	55

AC axial fans

S series, Ø 800, drawings for direction of air flow "V"

Without attachments

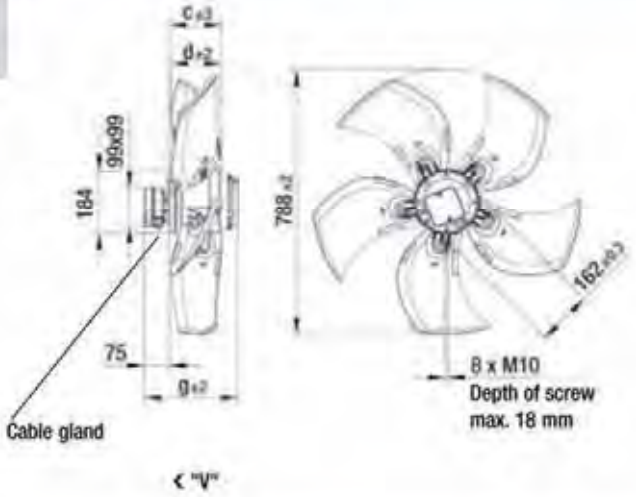

Type	Mass [kg]	c	d	g
A6D 800-AN01 -01	22.0	147.0	133.0	251.0
A6D 800-A001 -01	22.0	142.0	118.0	251.0
A6D 800-AJ01 -01	26.0	152.0	147.0	276.0
A6D 800-AS01 -01	29.0	157.0	162.0	296.0
A6D 800-AP01 -01	29.0	152.0	147.0	296.0
A8D 800-AN01 -01	22.0	147.0	133.0	251.0
A8D 800-AT03 -01	26.0	157.0	162.0	276.0
A8D 800-AJ01 -01	26.0	152.0	147.0	276.0
AZD 800-AM03 -01	22.0	152.0	147.0	251.0

With full square nozzle

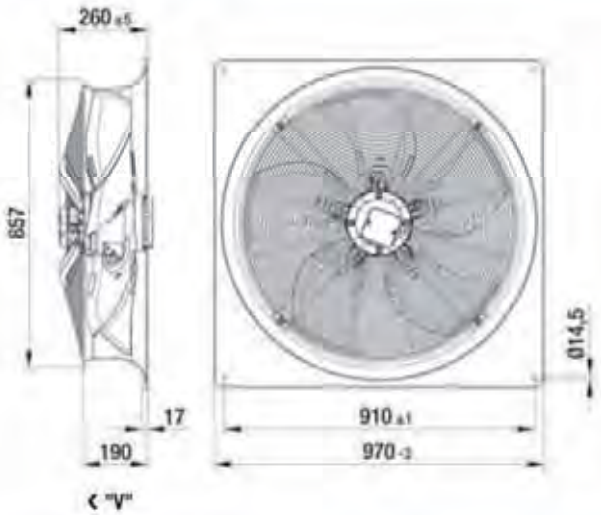

Type	Mass [kg]
W6D 800-GN01 -01	42.0
W6D 800-G001 -01	42.0
W6D 800-GJ01 -01	46.0
W6D 800-GS01 -01	49.0
W6D 800-GP01 -01	49.0
W8D 800-GN01 -01	42.0
W8D 800-GT03 -01	46.0
W8D 800-GJ01 -01	46.0
WZD 800-GM03 -01	42.0

With guard grille for full nozzle

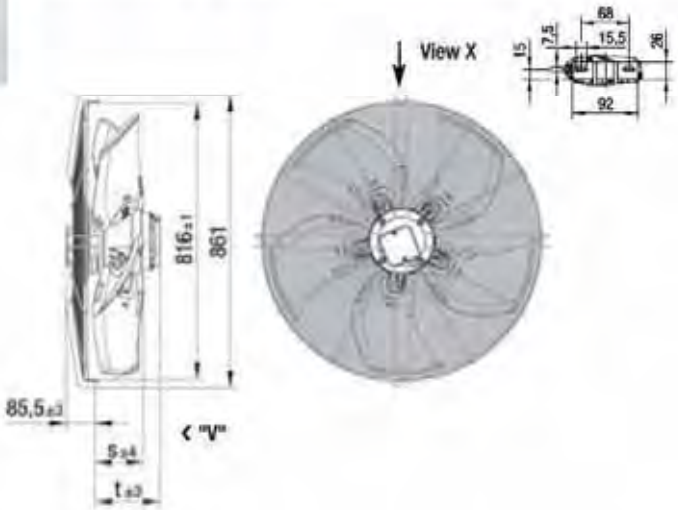

Type	Mass [kg]	s	t
S6D 800-CN01 -01	32.0	136.5	165.5
S6D 800-C001 -01	32.0	131.5	165.5
S6D 800-CJ01 -01	36.0	141.5	190.5
S6D 800-CS01 -01	39.0	146.5	210.5
S6D 800-CP01 -01	39.0	141.5	210.5
S8D 800-CN01 -01	32.0	136.5	165.5
S8D 800-CT03 -01	36.0	146.5	190.5
S8D 800-CJ01 -01	36.0	141.5	190.5
SZD 800-CM03 -01	32.0	141.5	165.5

ebmpapst

With guard grille for short nozzle

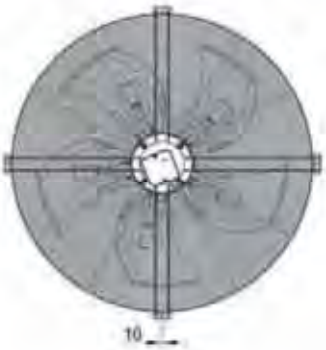

< "V"

Type	Mass [kg]	u	v
S6D 800-AN01 -01	34.0	17.0	51.0
S6D 800-A001 -01	34.0	17.0	51.0
S6D 800-AJ01 -01	38.0	27.0	76.0
S6D 800-AS01 -01	41.0	32.0	96.0
S6D 800-AP01 -01	41.0	27.0	96.0
S8D 800-AN01 -01	34.0	22.0	51.0
S8D 800-AT03 -01	38.0	32.0	76.0
S8D 800-AJ01 -01	38.0	27.0	76.0
SZD 800-AM03 -01	34.0	17.0	51.0

In-line duct fan

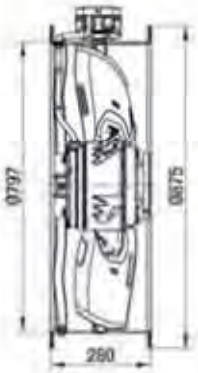

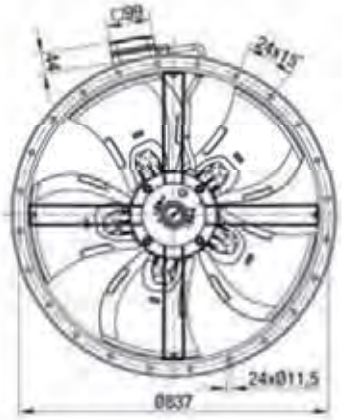

< "V"

Type	Mass [kg]
W6D800-IJ01 -01	43.8

AC axial fans

S series, Ø 800, drawings for direction of air flow "A"

Without attachments

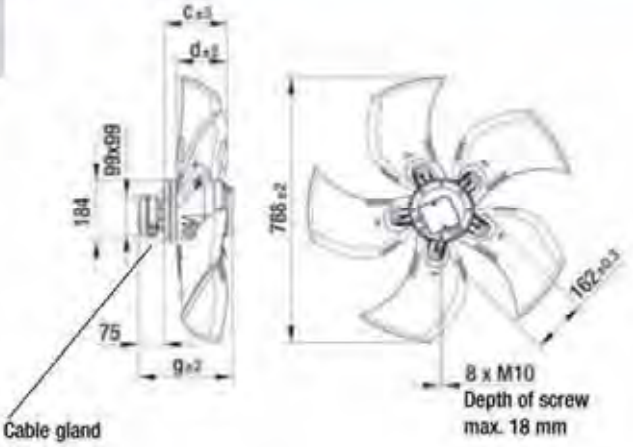

Type	Mass [kg]	c	d	g
A6D 800-AN01 -02	22.0	175.0	133.0	251.0
A6D 800-A001 -02	22.0	165.0	188.0	251.0
A6D 800-AJ01 -02	26.0	185.0	147.0	276.0
A6D 800-AS01 -02	29.0	194.0	162.0	296.0
A6D 800-AP01 -02	29.0	185.0	147.0	296.0
A8D 800-AN01 -02	22.0	175.0	133.0	251.0
A8D 800-AT03 -02	26.0	194.0	162.0	276.0
A8D 800-AJ01 -02	26.0	185.0	147.0	276.0
AZD 800-AM03 -02	22.0	185.0	147.0	251.0

With full square nozzle

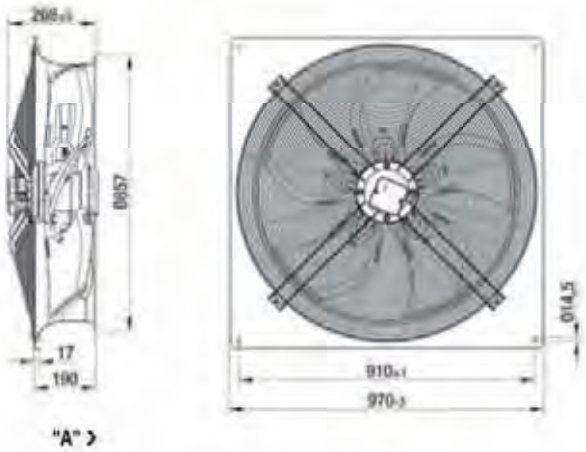

Type	Mass [kg]
W6D 800-DN01 -02	43.5
W6D 800-D001 -02	43.5
W6D 800-DJ01 -02	47.5
W6D 800-DS01 -02	50.5
W6D 800-DP01 -02	50.5
W8D 800-DN01 -02	43.5
W8D 800-DT03 -02	47.5
W8D 800-DJ01 -02	47.5
WZD 800-DM03 -02	43.5

With guard grille for full nozzle

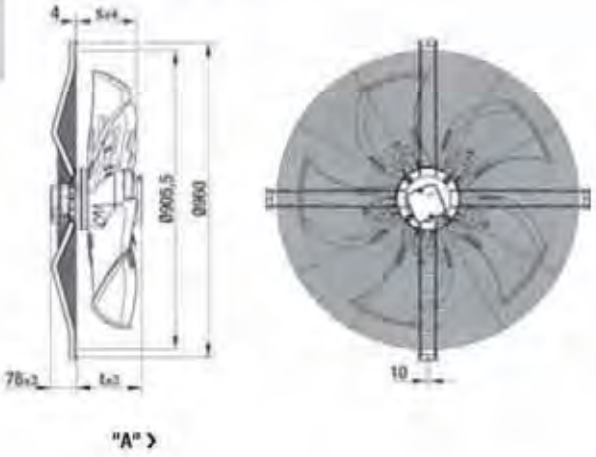

Type	Mass [kg]	s	t
S6D 800-BN01 -02	33.0	172.0	173.0
S6D 800-B001 -02	33.0	162.0	173.0
S6D 800-BJ01 -02	37.0	182.0	198.0
S6D 800-BS01 -02	40.0	191.0	218.0
S6D 800-BP01 -02	40.0	182.0	218.0
S8D 800-BN01 -02	34.0	172.0	173.0
S8D 800-BT03 -02	37.0	191.0	198.0
S8D 800-BJ01 -02	37.0	182.0	198.0
SZD 800-BM03 -02	34.0	182.0	173.0

AC axial fans

S series, Ø 910

- **Material:** Guard grille: Steel, phosphated and coated in black plastic
  Wall ring: Sheet steel, pre-galvanised and coated in black plastic
  Blades: Die-cast aluminium
  Rotor: Encased in aluminium
- **Number of blades:** 5
- **Direction of rotation:** Direction of air flow "V" clockwise, direction of air flow "A" counter-clockwise, seen on rotor
- **Type of protection:** IP 54 (acc. to EN 60529)
- **Insulation class:** "F"
- **Mounting position:** Any
- **Condensate discharge holes:** On rotor and stator side
- **Mode of operation:** Continuous operation (S1)
- **Bearings:** Maintenance-free ball bearings

Nominal data		Blade angle	Curve	Nominal voltage	Frequency	Speed/rpm (1)	Max. power input (1)	Max. current draw (1)	Capacitor	Max. operative range	Perm. amb. temp.	Electr. connection
Type	Motor			VAC	Hz	rpm	kW	A	µF/VDB	Pa	°C	p. 416 f.
*6D 910	M6D 138-HF	-10°	Ⓐ	3~ 400 Δ	50	880	1.30	2.75	—	150	-40 to +60	F1b)/F2b)
			Ⓑ	3~ 400 Y	50	670	0.81	1.56	—	85	-40 to +60	
*6D 910	M6D 138-LA	-5°	Ⓒ	3~ 400 Δ	50	900	1.84	3.76	—	150	-40 to +60	F1b)/F2b)
			Ⓓ	3~ 400 Y	50	700	1.20	2.24	—	88	-40 to +60	
*6D 910	M6D 138-LA	-10°	Ⓔ	3~ 400 Δ	50	930	1.41	3.20	—	165	-40 to +75	F1b)/F2b)
			Ⓕ	3~ 400 Y	50	780	1.03	1.90	—	115	-40 to +75	
*6D 910	M6D 138-NA	0°	Ⓖ	3~ 400 Δ	50	890	2.45	5.20	—	160	-40 to +50	F1b)/F2b)
			Ⓗ	3~ 400 Y	50	685	1.56	2.90	—	95	-40 to +50	
*6D 910	M6D 138-NA	-5°	Ⓘ	3~ 400 Δ	50	920	1.96	4.50	—	170	-40 to +60	F1b)/F2b)
			Ⓙ	3~ 400 Y	50	760	1.37	2.55	—	115	-40 to +60	
*6D 910	M6D 138-NA	-10°	Ⓚ	3~ 400 Δ	50	940	1.53	4.45	—	170	-40 to +70	F1b)/F2b)
			Ⓛ	3~ 400 Y	50	830	1.14	2.15	—	130	-40 to +70	

subject to alterations

(1) Nominal data in operating point ⓞ with maximum load

Curves

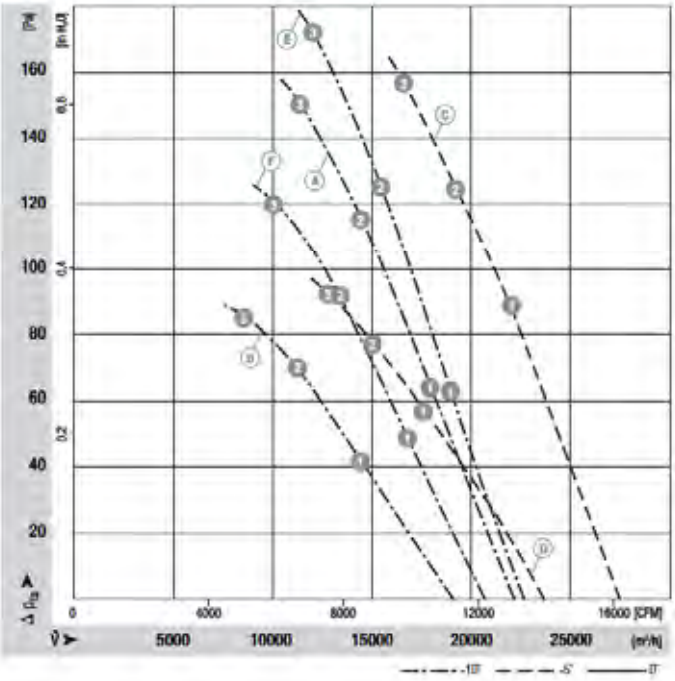

	n [rpm]	P_1 [kW]	I [A]	Lw_A [dB(A)]
Ⓐ ❶	910	1.06	2.56	77
Ⓐ ❷	890	1.21	2.72	78
Ⓐ ❸	880	1.30	2.75	82
Ⓑ ❶	740	0.72	1.36	72
Ⓑ ❷	700	0.78	1.47	72
Ⓑ ❸	670	0.81	1.56	74
Ⓒ ❶	920	1.59	3.51	76
Ⓒ ❷	910	1.72	3.67	77
Ⓒ ❸	900	1.84	3.76	79
Ⓓ ❶	745	1.10	2.01	71
Ⓓ ❷	720	1.15	2.11	71
Ⓓ ❸	700	1.20	2.24	72
Ⓔ ❶	945	1.11	2.91	78
Ⓔ ❷	935	1.27	3.08	79
Ⓔ ❸	930	1.41	3.20	83
Ⓕ ❶	840	0.85	1.56	75
Ⓕ ❷	805	0.96	1.74	75
Ⓕ ❸	780	1.03	1.90	78

- **Motor protection:** Design with thermal overload protector
- **Cable exit:** Via terminal box
- **Protection class:** I (acc. to EN 61800-5-1)
- **Product conforming to standard:** CE
- **Approvals:** VDE (acc. to EN 60034)

Direction of air flow	< "V"/"A" >	< "V"/"A" >	< "V"	< "V"	"A" >	"A" >	< "V"
	Without attachments	With full square nozzle	With guard grille for full nozzle	With guard grille for short nozzle	With guard grille for full nozzle	With guard grille for short nozzle	In-line duct fan
"V"	A6D 910-A001 -01	W6D910-G001 -01	S6D 910-C001 -01	S6D 910-A001 -01	—	—	—
"A"	A6D 910-A001 -02	W6D910-D001 -02	—	—	S6D 910-B001 -02	—	—
"V"	A6D 910-AK01 -01	W6D910-GK01 -01	S6D 910-CK01 -01	S6D 910-AK01 -01	—	—	—
"A"	A6D 910-AK01 -02	W6D910-DK01 -02	—	—	S6D 910-BK01 -02	—	—
"V"	A6D 910-AL01 -01	W6D910-GL01 -01	S6D 910-CL01 -01	S6D 910-AL01 -01	—	—	—
"A"	A6D 910-AL01 -02	W6D910-DL01 -02	—	—	S6D 910-BL01 -02	—	—
"V"	A6D 910-AP01 -01	W6D910-GP01 -01	S6D 910-CP01 -01	S6D 910-AP01 -01	—	—	—
"A"	A6D 910-AP01 -02	W6D910-DP01 -02	—	—	S6D 910-BP01 -02	—	—
"V"	A6D 910-AQ01 -01	W6D910-GQ01 -01	S6D 910-CQ01 -01	S6D 910-AQ01 -01	—	—	—
"A"	A6D 910-AQ01 -02	W6D910-DQ01 -02	—	—	S6D 910-BQ01 -02	—	—
"V"	A6D 910-AR01 -01	W6D910-GR01 -01	S6D 910-CR01 -01	S6D 910-AR01 -01	—	—	—
"A"	A6D 910-AR01 -02	W6D910-DR01 -02	—	—	S6D 910-BR01 -02	—	—

Curves

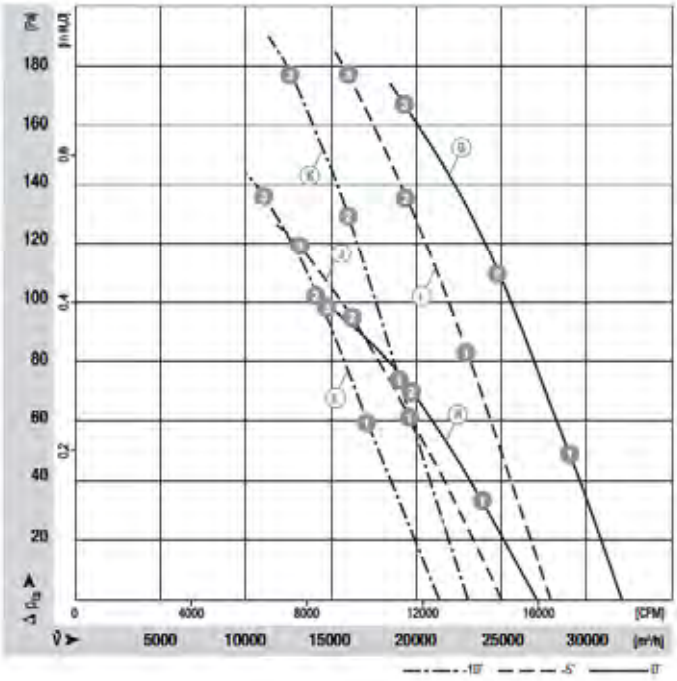

	n [rpm]	P_1 [kW]	I [A]	Lw_A [dB(A)]
⑥ ❶	920	1.99	4.65	78
⑥ ❷	905	2.24	4.95	78
⑥ ❸	890	2.45	5.20	79
⑩ ❶	760	1.39	2.57	72
⑩ ❷	725	1.49	2.76	70
⑩ ❸	685	1.56	2.90	72
① ❶	940	1.64	4.33	77
① ❷	930	1.82	4.51	78
① ❸	920	1.96	4.50	80
⑨ ❶	810	1.20	2.23	73
⑨ ❷	780	1.30	2.40	73
⑨ ❸	760	1.37	2.55	75
⑧ ❶	960	1.24	4.27	78
⑧ ❷	950	1.40	4.35	80
⑧ ❸	940	1.53	4.45	83
⑦ ❶	875	0.94	1.79	76
⑦ ❷	850	1.05	1.97	77
⑦ ❸	830	1.14	2.15	80

AC axial fans

S series, Ø 910

- **Material:** Guard grille: Steel, phosphated and coated in black plastic
  Wall ring: Sheet steel, pre-galvanised and coated in black plastic
  Blades: Die-cast aluminium
  Rotor: Encased in aluminium
- **Number of blades:** 5
- **Direction of rotation:** Direction of air flow "V" clockwise, direction of air flow "A" counter-clockwise, seen on rotor
- **Type of protection:** IP 54 (acc. to EN 60529)
- **Insulation class:** "F"
- **Mounting position:** Any
- **Condensate discharge holes:** On rotor and stator side
- **Mode of operation:** Continuous operation (S1)
- **Bearings:** Maintenance-free ball bearings

Nominal data		Blade angle	Curve	Nominal voltage	Frequency	Speed/rpm (1)	Max. power input (1)	Max. current draw (1)	Capacitor	Max. operative range	Perm. amb. temp.	Electr. connection
Type	Motor			VAC	Hz	rpm	kW	A	µF/VDB	Pa	°C	p. 416 f.
*8D 910	M8D 138-HF	-5°	Ⓐ	3~ 400 Δ	50	645	0.85	2.09	—	90	-40 to +60	F1b)/F2b)
			Ⓑ	3~ 400 Y	50	450	0.45	1.00	—	43	-40 to +60	
*8D 910	M8D 138-LA	0°	Ⓒ	3~ 400 Δ	50	665	1.11	2.70	—	90	-40 to +65	F1b)/F2b)
			Ⓓ	3~ 400 Y	50	495	0.68	1.36	—	50	-40 to +65	
*ZD 910	MZD 138-HF	0°	Ⓔ	3~ 400 Δ	50	425	0.42	1.15	—	40	-40 to +70	F1b)/F2b)
			Ⓕ	3~ 400 Y	50	315	0.22	0.50	—	21	-40 to +70	
*ZD 910	MZD 138-HF	-5°	Ⓖ	3~ 400 Δ	50	430	0.32	0.86	—	42	-40 to +100	F1b)/F2b)
			Ⓗ	3~ 400 Y	50	320	0.17	0.40	—	22	-40 to +100	

Subject to alterations

(1) Nominal data in operating point ☐ with maximum load

Curves

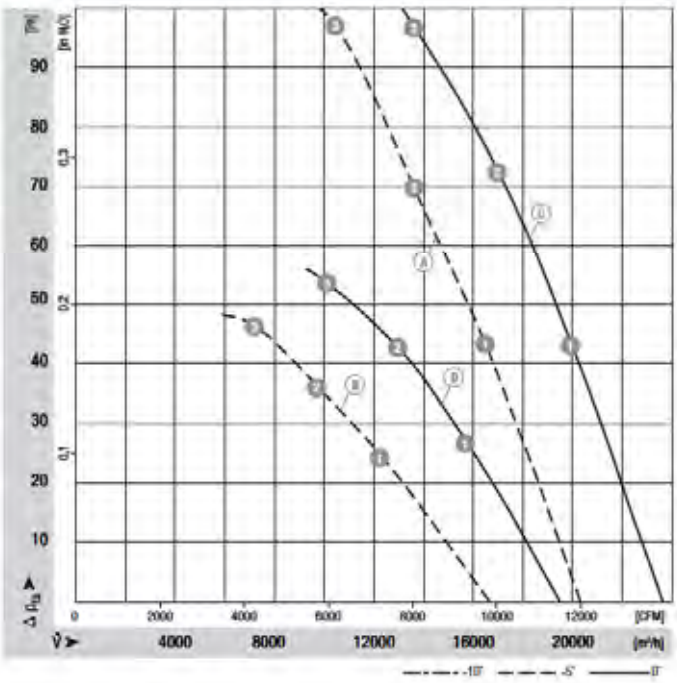

	n [rpm]	P_1 [kW]	I [A]	Lw_A [dB(A)]
Ⓐ ❶	670	0.73	1.94	68
Ⓐ ❷	655	0.80	2.03	68
Ⓐ ❸	645	0.85	2.09	69
Ⓑ ❶	500	0.43	0.95	62
Ⓑ ❷	460	0.44	0.99	60
Ⓑ ❸	450	0.45	1.00	60
Ⓒ ❶	685	0.94	2.49	69
Ⓒ ❷	675	1.03	2.57	69
Ⓒ ❸	665	1.11	2.70	71
Ⓓ ❶	540	0.62	1.23	64
Ⓓ ❷	515	0.65	1.30	63
Ⓓ ❸	495	0.68	1.36	64

ebmpapst

- **Motor protection:** Design with thermal overload protector
- **Cable exit:** Via terminal box
- **Protection class:** I (acc. to EN 61800-5-1)
- **Product conforming to standard:** CE
- **Approvals:** VDE (acc. to EN 60034)

Direction of air flow	< "V"/"A" >	< "V"/"A" >	< "V"	< "V"	"A" >	"A" >	< "V"
	Without attachments	With full square nozzle	With guard grille for full nozzle	With guard grille for short nozzle	With guard grille for full nozzle	With guard grille for short nozzle	In-line duct fan
"V"	A8D 910-AN07 -01	W8D 910-GN07 -01	S8D 910-CN07 -01	S8D 910-AN07 -01	—	—	—
"A"	A8D 910-AN07 -02	W8D 910-DN07 -02	—	—	S8D 910-BN07 -02	—	—
"V"	A8D 910-AJ03 -01	W8D 910-GJ03 -01	S8D 910-CJ03 -01	S8D 910-AJ03 -01	—	—	—
"A"	A8D 910-AJ03 -02	W8D 910-DJ03 -02	—	—	S8D 910-BJ03 -02	—	—
"V"	AZD 910-AM03 -01	WZD 910-GM03 -01	SZD 910-CM03 -01	SZD 910-AM03 -01	—	—	—
"A"	AZD 910-AM03 -02	WZD 910-DM03 -02	—	—	SZD 910-BM03 -02	—	—
"V"	AZD 910-AN05 -01	WZD 910-GN05 -01	SZD 910-CN05 -01	SZD 910-AN05 -01	—	—	—
"A"	AZD 910-AN05 -02	WZD 910-DN05 -02	—	—	SZD 910-BN05 -02	—	—

Curves

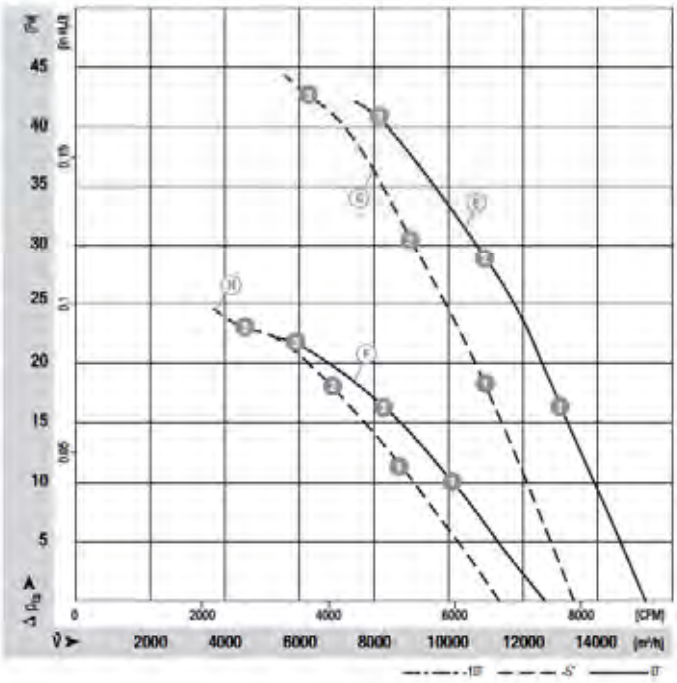

		n [rpm]	P_1 [kW]	I [A]	LW_A [dB(A)]
Ⓔ	❶	445	0.36	1.11	61
Ⓔ	❷	435	0.39	1.13	59
Ⓔ	❸	425	0.42	1.15	61
Ⓕ	❶	345	0.20	0.46	54
Ⓕ	❷	330	0.21	0.48	53
Ⓕ	❸	315	0.22	0.50	53
Ⓖ	❶	450	0.27	0.81	60
Ⓖ	❷	440	0.29	0.84	59
Ⓖ	❸	430	0.32	0.86	61
Ⓗ	❶	360	0.16	0.36	54
Ⓗ	❷	340	0.17	0.38	53
Ⓗ	❸	320	0.17	0.40	53

AC axial fans

S series, Ø 910, drawings for direction of air flow "V"

Without attachments

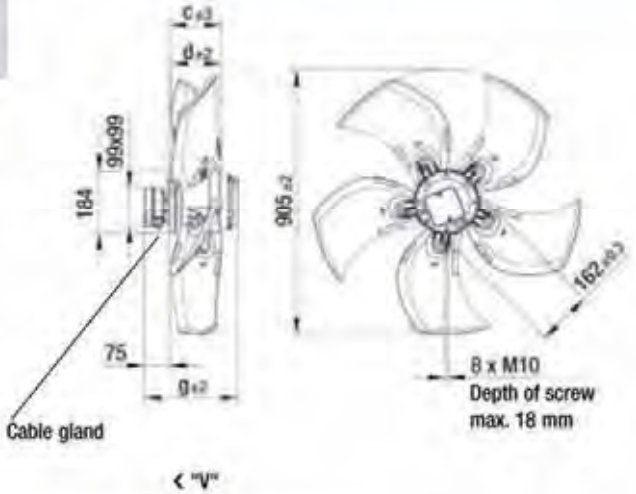

Type	Mass [kg]	c	d	g
A6D 910-A001 -01	22.0	147.0	104.0	251.0
A6D 910-AK01 -01	27.0	152.0	115.0	276.0
A6D 910-AL01 -01	27.0	147.0	104.0	276.0
A6D 910-AP01 -01	30.0	156.0	123.0	296.0
A6D 910-AQ01 -01	30.0	152.0	115.0	296.0
A6D 910-AR01 -01	30.0	147.0	104.0	296.0
A8D 910-AN07 -01	22.0	152.0	115.0	251.0
A8D 910-AJ03 -01	27.0	156.0	123.0	276.0
AZD 910-AM03 -01	22.0	157.0	123.0	251.0
AZD 910-AN05 -01	22.0	152.0	115.0	251.0

With full square nozzle

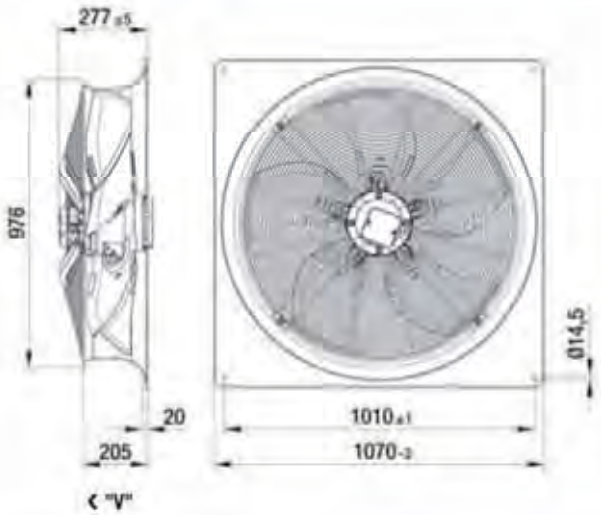

Type	Mass [kg]
W6D910-G001 -01	42.0
W6D910-GK01 -01	47.0
W6D910-GL01 -01	47.0
W6D910-GP01 -01	50.0
W6D910-GQ01 -01	50.0
W6D910-GR01 -01	50.0
W8D910-GN07 -01	42.0
W8D910-GJ03 -01	47.0
WZD910-GM03 -01	42.0
WZD910-GN05 -01	42.0

With guard grille for full nozzle

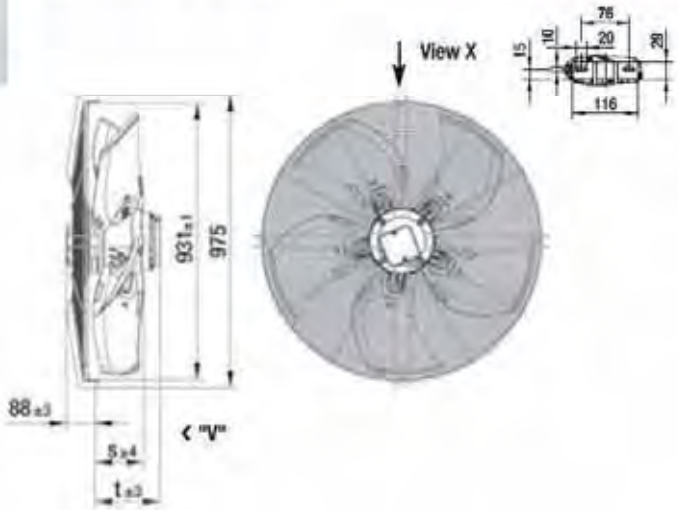

Type	Mass [kg]	s	t
S6D 910-C001 -01	33.0	134.0	163.0
S6D 910-CK01 -01	38.0	139.0	188.0
S6D 910-CL01 -01	38.0	134.0	188.0
S6D 910-CP01 -01	41.0	143.0	208.0
S6D 910-CQ01 -01	41.0	139.0	208.0
S6D 910-CR01 -01	41.0	134.0	208.0
S8D 910-CN07 -01	33.0	139.0	163.0
S8D 910-CJ03 -01	38.0	143.0	188.0
SZD 910-CM03 -01	33.0	143.0	163.0
SZD 910-CN05 -01	33.0	139.0	163.0

With guard grille for short nozzle

< "V"

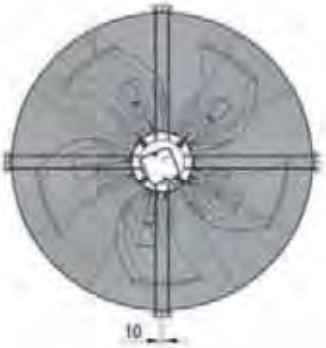

Type	Mass [kg]	u	v
S6D 910-A001 -01	35.0	17.0	46.0
S6D 910-AK01 -01	40.0	22.0	71.0
S6D 910-AL01 -01	40.0	17.0	71.0
S6D 910-AP01 -01	43.0	26.0	91.0
S6D 910-AQ01 -01	43.0	22.0	91.0
S6D 910-AR01 -01	43.0	17.0	91.0
S8D 910-AN07 -01	35.0	22.0	46.0
S8D 910-AJ03 -01	40.0	26.0	71.0
SZD 910-CM03 -01	35.0	26.0	46.0
SZD 910-CN05 -01	35.0	22.0	46.0

AC axial fans

S series, Ø 910, drawings for direction of air flow "A"

Without attachments

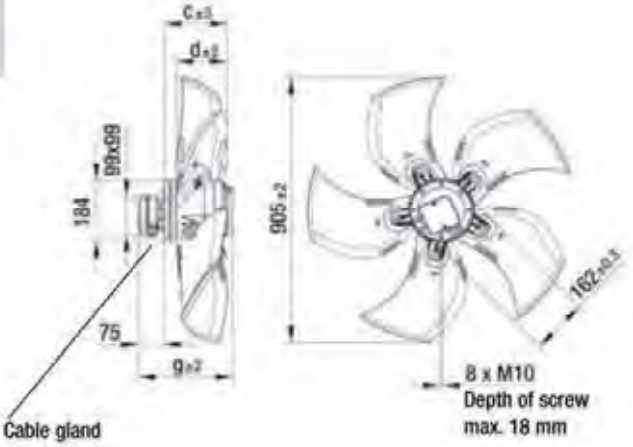

Type	Mass [kg]	c	d	g
A6D 910-A001 -02	22.0	145.0	104.0	251.0
A6D 910-AK01 -02	27.0	154.0	115.0	276.0
A6D 910-AL01 -02	27.0	145.0	104.0	276.0
A6D 910-AP01 -02	30.0	157.0	123.0	296.0
A6D 910-AQ01 -02	30.0	154.0	115.0	296.0
A6D 910-AR01 -02	30.0	145.0	104.0	296.0
A8D 910-AN07 -02	22.0	154.0	115.0	251.0
A8D 910-AJ03 -02	27.0	157.0	123.0	276.0
AZD 910-AM03 -02	22.0	157.0	123.0	251.0
AZD 910-AN05 -02	22.0	154.0	115.0	251.0

With full square nozzle

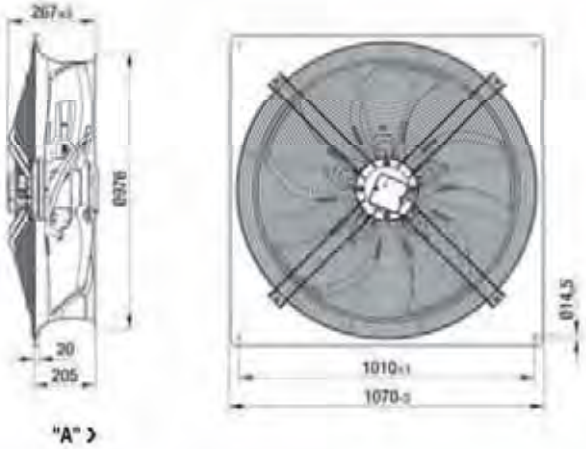

Type	Mass [kg]
W6D910-D001 -02	43.5
W6D910-DK01 -02	48.5
W6D910-DL01 -02	48.5
W6D910-DP01 -02	51.5
W6D910-DQ01 -02	51.5
W6D910-DR01 -02	51.5
W8D910-DN07 -02	43.5
W8D910-DJ03 -02	48.5
WZD910-DM03 -02	43.5
WZD910-DN05 -02	43.5

With guard grille for full nozzle

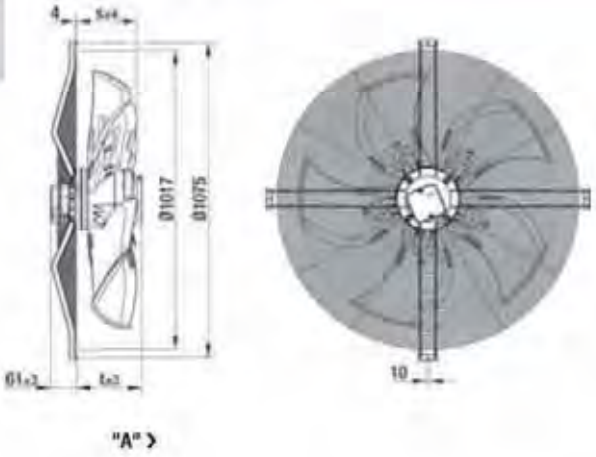

Type	Mass [kg]	s	t
S6D 910-B001 -02	34.0	159.0	195.0
S6D 910-BK01 -02	39.0	168.0	215.0
S6D 910-BL01 -02	39.0	159.0	215.0
S6D 910-BP01 -02	42.0	171.0	235.0
S6D 910-BQ01 -02	42.0	168.0	235.0
S6D 910-BR01 -02	42.0	159.0	235.0
S8D 910-BN07 -02	34.0	168.0	195.0
S8D 910-BJ03 -02	39.0	171.0	215.0
SZD 910-BM03 -02	34.0	171.0	195.0
SZD 910-BN05 -02	34.0	168.0	195.0

AC axial fans K series
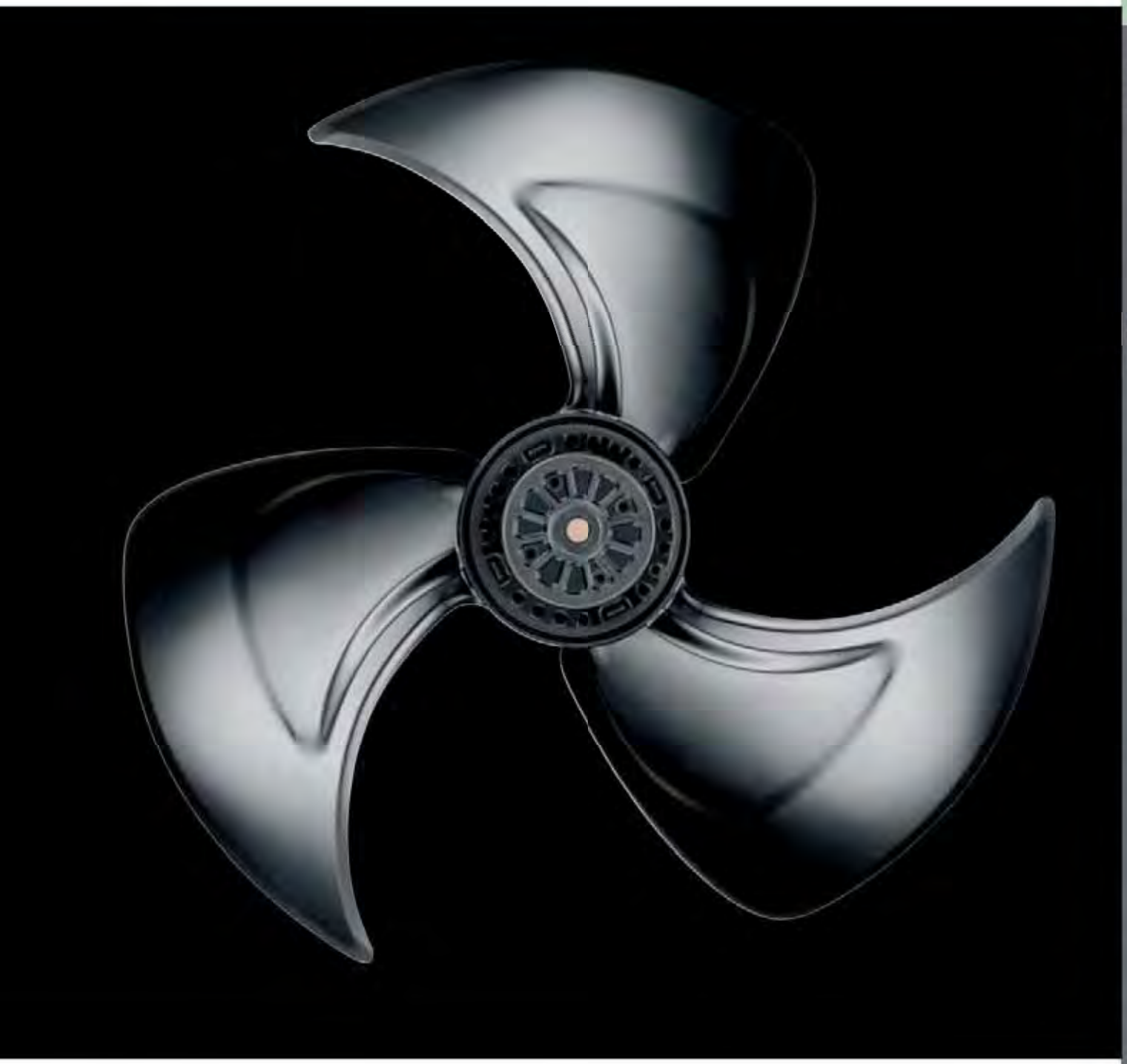
AC axial fans, K series	Ø 250 - Ø 450	132