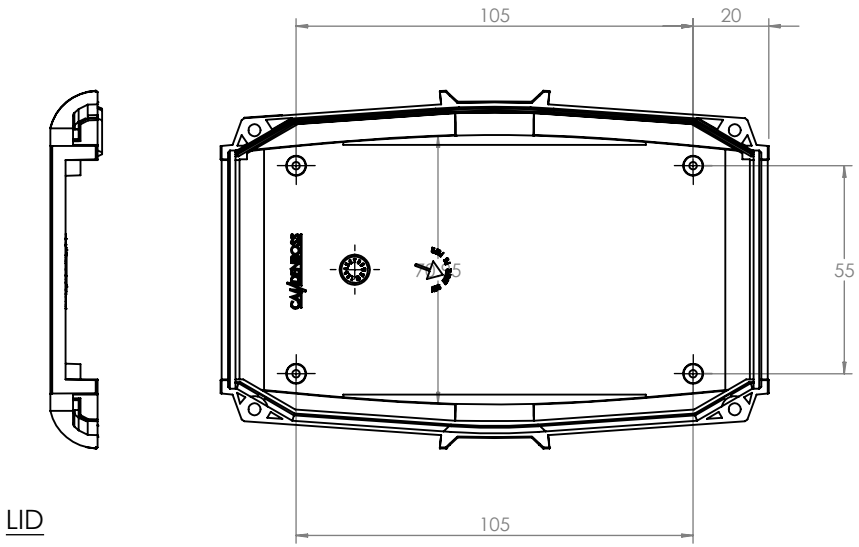

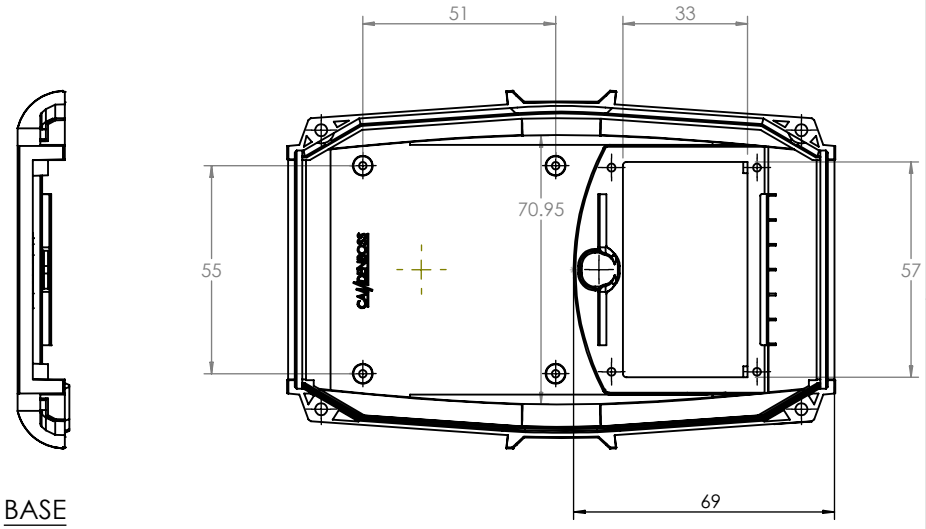

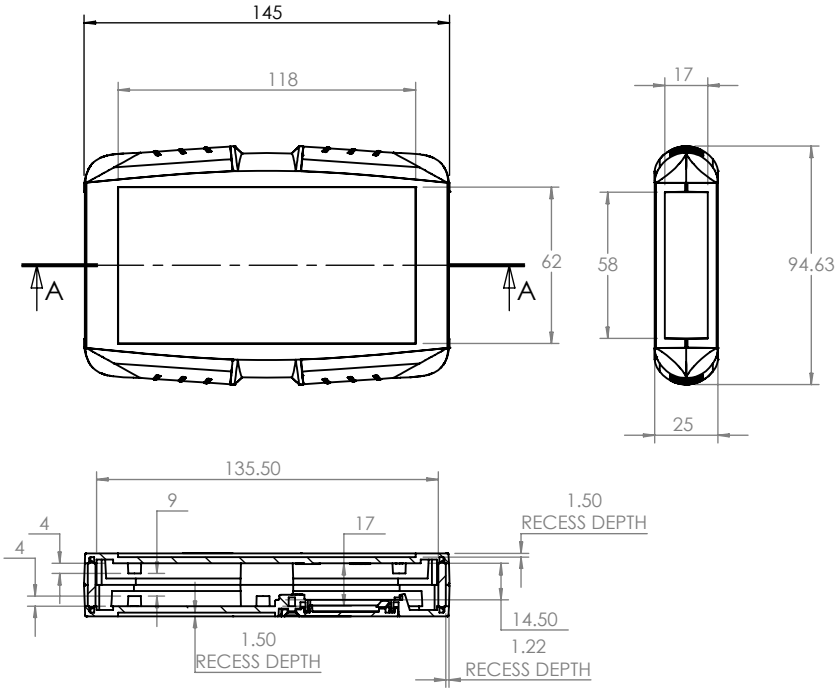

SECTION A-A
SCALE 1 : 3

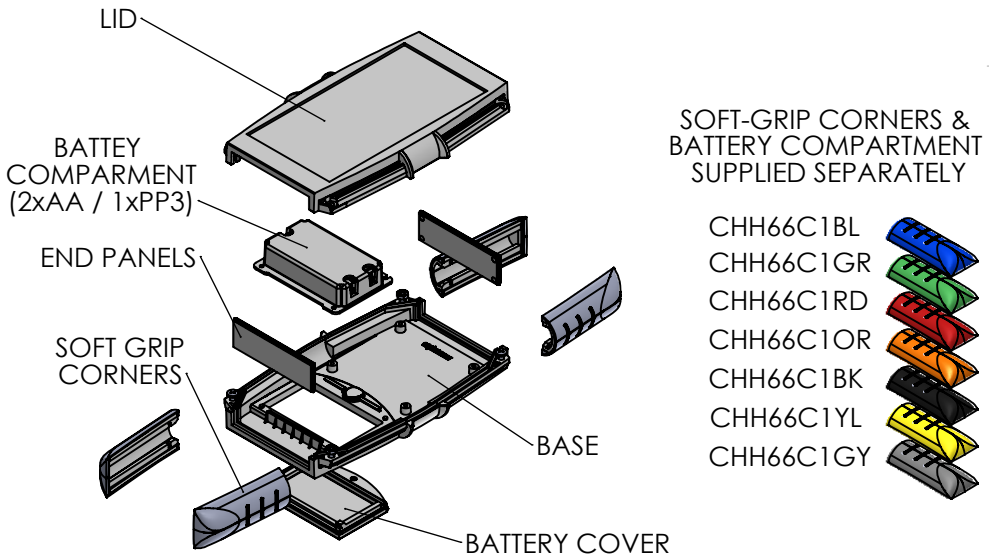

CAMDENBOSS ELECTRONICS & ENCLOSURES
JAMES CARTER RD, MILDENHALL, SUFFOLK. IP28 7DE
TEL: 01638 716101 FAX: 01638 716554
EMAIL: Sales@CamdenBoss.com
WEB: www.CamdenBoss.com

UNLESS OTHERWISE SPECIFIED: DIMENSIONS ARE IN MILLIMETERS

GENERAL TOLERANCES +/- 0.2

FINISH. LIGHT SPARK

MATERIAL. UL94-V0 ABS BLACK

PROJECTION.

DO NOT SCALE DRAWING

REVISION. O

TITLE: GNL ASSEMBLY DRG FOR 66 SERIES

DWG NO. CHH661BBK

A4

SCALE.

SHEET 1 OF 1

	NAME	SIGNED	DATE
DRAWN	IAN PAGANO	I.P	10/01/13
CHK'D	-	-	-